COUNCIL MEMBERS

JIM JOLLY
PRESIDENT

LAURA M. TOY
VICE PRESIDENT

SCOTT BAHR
ROB GJONAJ DONOVIC
BRANDON McCULLOUGH
KATHLEEN E. McINTYRE
SCOTT MORGAN

33000 CIVIC CENTER DRIVE
LIVONIA, MICHIGAN 48154-3097
(734) 466-2250
citycouncil@livonia.gov

OFFICE OF THE COUNCIL

ELECTRONIC AGENDA PACKET FOR THE REGULAR MEETING OF WEDNESDAY, OCTOBER 5, 2022 7:00 P.M.

The electronic agenda is compiled, produced and distributed by the City Council Staff.
(734) 466-2250

The official documents are on file in the City Clerk's office.

1954th Regular Meeting of the Council of the City of Livonia
Wednesday, October 5, 2022

7:00 p.m. – City Hall Auditorium
33000 Civic Center Drive
Livonia, Michigan

CALL TO ORDER

INVOCATION/PLEDGE OF ALLEGIANCE

ROLL CALL

PRESENTATION OF MINUTES - 1953rd Regular Meeting Minutes of September 26, 2022

AUDIENCE COMMUNICATION

REPORTS FROM THE MAYOR AND OTHER CITY OFFICIALS

a. ADMINISTRATIVE RESPONSE TO CR 107-97: Office of the Mayor, re: subject matter of the City Assigned Vehicle Policy.

CONSENT AGENDA

1. BLOCK PARTY: Stephanie Estereicher, re: to be held Sunday, October 23, 2022, from 12:00 p.m. until 5:00 p.m. on Bretton Drive.

2. REQUEST TO WAIVE STREETLIGHT REQUIREMENT: Enrico Soave, Belaggio Homes, re: for the Livonia Manor 3 site condominiums.

3. REQUEST FOR AUTHORIZATION TO PURCHASE THREE REPLACEMENT VEHICLES AND ADDITIONAL EXPENDITURE: Division of Police, re: in the amount of $14,091.00, to complete the previously authorized award of bid for twelve vehicles that were unavailable to purchase due to manufacturing issues. (CR 61-22)

4. REQUEST TO APPROVE PROVIDER PARTICIPATION AGREEMENT FOR THE PERIOD FY 2022-2026 BETWEEN THE CITY OF LIVONIA AND MICHIGAN STATE HOUSING DEVELOPMENT AUTHORITY (MSHDA): Department of Finance, Water Administration, re: with grant resources to be used for qualifying Livonia homeowners with delinquent water utility bills.

5. REQUEST TO APPROVE PASS THROUGH AGREEMENT FOR THE 2022-2023 FISCAL YEAR BETWEEN THE CITY OF LIVONIA AND SOUTHEAST MICHIGAN COUNCIL OF GOVERNMENTS (SEMCOG): Housing Department, re: with grant funds to be used for the Livonia Community Transit Program to provide planning assistance to identify future transportation needs within the City.

6. REQUEST FOR AUTHORIZATION TO PURCHASE ONE (1) 2022 FORD CRUSADER CHALLENGER 12+2 PASSENGER BUS THROUGH THE STATE OF MICHIGAN BID PROCESS: Livonia Housing Commission, re: for use by Livonia Community Transit, from budgeted funds.

7. REQUEST FOR AUTHORIZATION TO PURCHASE ONE (1) 2023 FORD F150 REGULAR CAB 4X2 8' BED UTILIZING THE STATE OF MICHIGAN BID PRICING: Department of Parks and Recreation, re: to replace outdated vehicle, from budgeted funds.

8. AWARD OF BID: Department of Parks and Recreation, re: for the lease of 11 pieces of equipment in order to maintain the Fox Creek, Whispering Willows and Idyl Wyld golf courses, from budgeted funds.

9. AWARD OF BID: Department of Parks and Recreation, re: to replace the sound equipment at the Jack E. Kirksey Recreation Center, from budgeted funds.

10. AWARD OF BID AND REQUEST FOR ADDITIONAL APPROPRIATION: Department of Parks and Recreation, re: for the Underground Utility Mapping at Greenmead Historical Park, from the unexpended fund balance of the Historical Trust Fund and budget transfer in the amount of $23,000 to cover all associated expenses.

11. REQUEST FOR AUTHORIZATION TO PURCHASE ONE 2023 FORD TRANSIT 350 CARGO VAN THROUGH THE STATE OF MICHIGAN AND MACOMB COUNTY BID PROCESS WITH THE UPFITTING THROUGH THE MI-DEAL STATE BID PROCESS; Department of Public Works, re: to replace a vehicle for the primary use by the Water Department, from budgeted funds.

12. REQUEST TO AMEND THE ENGINEERING CONTRACT THROUGH THE QUALIFICATION BASED SELECTION (QBS) PROCESS WITH OHM ADVISORS AND AUTHORIZE EXPENDITURE: Department of Public Works, re: for the Drinking Water Asset Management Grant (DWAM), from budgeted funds, to be reimbursed from the DWAM grant. (CR 365-16)

13. PROPOSED AMENDMENT TO LIVONIA CODE OF ORDINANCE, AS AMENDED: Department of Law, re: to add Chapter 65 (Civil Rights Non-Discrimination) to Title 2, in order to streamline the process for reporting discriminatory behavior in our community, expand protections for those who face discrimination, and make a clear statement about our values as an arms-wide-open community.

UNFINISHED BUSINESS - MEETINGS OF THE COMMITTEE

14 SENIOR CITIZENS, FAMILIES AND ENVIRONMENT COMMITTEE MEETING OF AUGUST 1, 2022

a. Subject matter of urban environment concerns. (CR 42-20)

b. Subject matter of sustainability in the City. (CR 23-21)

UNFINISHED BUSINESS

NEW BUSINESS

AUDIENCE COMMUNICATION

SUSAN M. NASH, CITY CLERK

NOTICE(S)

In accordance with Title II of the American with Disabilities Act as it pertains to access to Public Meetings, the City Clerk's Office of the City of Livonia, upon adequate notice, will make reasonable accommodations for persons with special needs. Please call (734) 466-2236 or email clerk@livonia.gov if you need assistance. Council agendas are available on the City's website – www.livonia.gov - under Government, City Council, Agendas.

LETTER TO THE LIVONIA CITY COUNCIL

Mayor's Office
September 15, 2022

MEETING DATE	PREPARED BY
R100522	Janice Centers, Executive Assistant to the Mayor - Program Supervisor,

AGENDA ITEM

a. ADMINISTRATIVE RESPONSE TO CR 107-97: Office of the Mayor, re: subject matter of the City Assigned Vehicle Policy.

BACKGROUND

Dear Council Members,

Please accept the attached letter and supporting documents as the Mayor's Office report in response to resolution #106-97, regarding the subject matter of the City's assigned vehicle policy, which remains in the Finance and Budget Committee.

Sincerely,
Maureen Miller Brosnan
Mayor

RECOMMENDATION

Receive and File

FISCAL CONSIDERATION

ATTACHMENTS

1. Vehicle Policy Letter to Council
2. Assigned Vehicle Policy (6)
3. Assigned Vehicles by Position w Stipend elibility

APPROVED BY

Michael T Slater

Michael Slater, Finance Director

Date: September 15, 2022

Maureen Miller Brosnan

Date: September 16, 2022

Maureen Miller Brosnan, Mayor

OFFICE OF THE MAYOR

MAUREEN MILLER BROSNAN
MAYOR

33000 CIVIC CENTER DRIVE
LIVONIA, MICHIGAN 48154-3097
mayor@livonia.gov
(734) 466-2201

September 14, 2022

TO: Livonia City Council
RE: Assigned Vehicles

Dear Council Members,

At the Aug. 10, 2022, Finance and Budget Committee meeting, the Administration reported on the status of a new Assigned Vehicle policy and our goal of identifying city positions that are eligible to be moved from an assigned vehicle to a stipend based on greater efficiency, effectiveness and economics.

Attached is a copy of the Assigned Vehicle policy and spreadsheet showing the Assigned Vehicle list by Position, with Stipend eligibility.

As identified previously, we will be working with the Department of Public Works Fleet Management to move employees in eligible positions from assigned vehicles to stipends during employee transitions or reviews or as vehicles reach the end of their useful life. Current stipends are $350 per month, an amount that hasn't changed in more than 18 years.

Additionally, at the Council's suggestion, we have set up a new procedure whereby the Finance Department will regularly review gasoline usage reports for each assigned vehicle to ensure amount and frequency of fuel usage is appropriate.

Sincerely,

Maureen Miller Brosnan
Mayor

c.c. Finance, Department Heads

OFFICE OF THE MAYOR

MAUREEN MILLER BROSNAN
MAYOR

33000 CIVIC CENTER DRIVE
LIVONIA, MICHIGAN 48154-3097
mayor@livonia.gov
(734) 466-2201

MEMORANDUM

TO: City of Livonia Department Heads

FROM: Mayor Maureen Miller Brosnan

DATE: September 13, 2022

RE: **City of Livonia Assigned Vehicles Use Policy**

The City provides vehicles for official business, commuting and incidental use by certain employees, as assigned, based on specific duties and responsibilities. Assignment of vehicles is at the discretion of the Mayor and may be changed or be withdrawn at any time.

The following policy shall apply to City employees and Elected City Officials with assigned City vehicles beginning with the City's 2022-23 fiscal year:

1. Vehicles are provided for work-related purposes only, plus limited personal use or incidental stops during travel to and from work.

2. Employees shall reimburse the City for miles beyond 50 miles of commuting per day, at the current IRS-approved mileage reimbursement rate.

3. Assigned vehicles shall not be driven by non-City employees, except for diagnostic or repair purposes.

4. Assigned vehicles may only be used by another employee with express permission from the Department Head.

5. Those who operate city-owned vehicles shall have a valid driver's license, operate any City vehicle in compliance with all state and local laws (including not texting while driving, wearing seatbelts, etc.), and maintain the security of the vehicle and its contents.

6. No modifications, additions or removals of equipment or accessories is permitted without permission of the Department Head or Mayor.

7. Employees are responsible for the cleanliness and overall maintenance of assigned vehicles with supplies provide by the City's vehicle maintenance staff.

8. Employees are responsible for any driving infractions or fines when driving assigned vehicles.

9. Use of gasoline pumps shall follow City procedures and gasoline may only be used for City vehicles. City staff will monitor gasoline use and will report excessive use to the Mayor.

10. Vehicle incidents, damage or traffic accidents must be reported immediately to the City's vehicle maintenance staff.

11. Access to assigned vehicles for City employees is a privilege. Failure to comply with these rules may result in the vehicle privilege being rescinded.

Acknowledgment of Assigned Vehicle Policy

The undersigned acknowledges and agrees to abide by the assigned vehicle policy set forth above.

Print Name: _____

Signature: _____

Date: _____

Title: _____

Please deliver signed acknowledgement to the Civil Service Department.

City of Livonia
Assigned Vehicle List
July, 2022

Department	Position	Currently Assigned Vehicle	Stipend
Assessing	City Assessor		Eligible
Clerk	City Clerk	X	Eligible
Comm. Resources	Director		Eligible
DPW	Roads Supervisor	X	Not Eligible
DPW	Fleet Manager	X	Not Eligible
DPW	Facilities Maintenance Supervisor	X	Eligible
DPW	Assistant Director	X	Not Eligible
DPW	Director	X	Not Eligible
DPW	Assistant Director	X	Not Eligible
DPW	Superintendent	X	Not Eligible
DPW	Water and Sewer Supervisor	x	Not Eligible
Emergency Prep	Director	X	Not Eligible
Engineering	City Engineer	X	Not Eligible
Finance	Director	X	Eligible
Fire	Fire Chief	X	Not Eligible
Fire	Fire Deputy Chief	X	Not Eligible
Fire	Fire Marshal	X	Not Eligible
Fire	Fire Training Officer	X	Not Eligible
Fire	Senior Fire Inspector	X	Not Eligible
Fire	Fire Inspector 1	X	Not Eligible
Fire	Fire Inspector 2	X	Not Eligible
Fire	Fire Apparatus Supervisor	X	Not Eligible
Gov't Affairs	Director		Eligible
Housing	Director	X	Eligible
Human Resources	Director		Eligible
Info Systems	Director		Eligible
Inspection	Director	X	Not Eligible
Inspection	Deputy Director	X	Not Eligible
Law	City Attorney		Eligible
Library	Director		Eligible
Mayor	Mayor	X	Eligible
Mayor	Chief of Staff		Eligible
Park and Rec	Superintendent	X	Eligible
Planning & Econ.	Director	X	Eligible
Police	Police Chief	X	Not Eligible
Police	Police Deputy Chief	X	Not Eligible
Police	Police Captain	X	Not Eligible
Police	Police Captain	X	Not Eligible
Police	S/Lieutenant	X	Not Eligible
Police	S/Lieutenant	X	Not Eligible
Police	S/Lieutenant	X	Not Eligible
Police	S/Lieutenant	X	Not Eligible
Police	S/Lieutenant	X	Not Eligible
Police	Lieutenant	X	Not Eligible

City of Livonia
Assigned Vehicle List
July, 2022

Department	Position	Currently Assigned Vehicle	Stipend
Police	S/Sergant	X	Not Eligible
Police	Officer-K9	X	Not Eligible
Police	Intelligence S/Lieutenant	X	Not Eligible
Police	Intelligence S/Sergant	X	Not Eligible
Police	Intelligence S/Sergant	X	Not Eligible
Police	Intelligence Sergant	X	Not Eligible
Police	Intelligence Officer	X	Not Eligible
Police	Intelligence Officer	X	Not Eligible
Police	Intelligence Officer	X	Not Eligible
Police	Intelligence Officer	X	Not Eligible
Treasurer	City Treasurer	X	Eligible

CITY OF LIVONIA – CITY COUNCIL
MINUTES OF STUDY MEETING HELD SEPTEMBER 26, 2022

Meeting was called to order at 8:06 p.m. by Council Vice President Jim Jolly. Present: Vice President Laura Toy, Scott Bahr, Rob Donovic, Scott Morgan, Brandon McCullough. Absent: Kathleen McIntyre

Elected and appointed officials present: Maureen Miller Brosnan, Mayor, Susan Nash, City Clerk, Paul Bernier, City Attorney, Todd Zilincik, City Engineer, LaShawn Thomas, Director of Governmental Affairs, Thomas Goralski Police Chief, Brandie Isaacson, Housing Director, Ted Davis, Superintendent of Parks and Recreation, Jacob Rushlow, Assistant Superintendent of Public Works.

Councilmember Scott Bahr led the Pledge of Allegiance.

1. BLOCK PARTY: Stephanie Estereicher, re: to be held Sunday, October 23, 2022, from 12:00 p.m. until 5:00 p.m. on Bretton Drive.

   Stephanie Estereicher presented the request to Council.

   Councilmember Scott Morgan offered an approving motion for the Consent agenda.

   DIRECTION: APPROVAL CONSENT

LETTER TO THE LIVONIA CITY COUNCIL

1.

City Clerk
September 1, 2022

MEETING DATE	PREPARED BY
S092622/R100522	Lori Miller, Deputy City Clerk,

AGENDA ITEM

BLOCK PARTY: Stephanie Estereicher, re: to be held Sunday, October 23, 2022, from 12:00 p.m. until 5:00 p.m. on Bretton Drive.

BACKGROUND

Block party for sub-wide Halloween parade and party, 10th year anniversary. Barricades in front of representative's home (34067 Bretton Drive) and neighbor directly across street. Event to include games, face painting, Kona Truck, etc. for approximately 150 attendees.

RECOMMENDATION

Approve request as submitted.

FISCAL CONSIDERATION

N/A

ATTACHMENTS

1. Bretton Dr Block Party, S092622

APPROVED BY

REQUEST FOR NOISE WAIVER BLOCK PARTY and/or BARRICADING OF CITY STREETS

Send to: Livonia City Council, c/o City Clerk, 33000 Civic Center Drive, Livonia, MI 48154-3097
or hand deliver to the City Clerk's Office **at least 8 weeks prior to the planned event**

PLEASE PRINT

Date of Application: 8/31/22 Date to appear at a Council Meeting: _____

Name of Neighborhood Representative: Stephanie Estereicher

Address (please include zip code): 34067 Bretton Dr. 48152

Telephone Number with area code: ~~Home~~ cell: (734) 564-7727 Office: _____

Email: babyjuly84@gmail.com

Please circle what is being requested – **"BLOCK PARTY"** and/or **"STREET BARRICADING"**

10/23/22	None	12:00pm - 5:00pm
Date of Block Party and/or Barricading	Rain Date	Start/end time of Block Party and/or Barricading **End time is no later than 10:00 p.m.**

Location of Block Party and/or Barricading: (Be specific. Indicate which streets and between which boundaries).

Barricades on Bretton Drive. Only 2 driveways would be blocked - myself and my neighbor directly across the street who is also participating in the event. ☺

Type of Event: Briefly (Describe activities planned. Music, barbecue, games, etc.) Sub wide Halloween parade/party. This is our 10th year and approx 150 people participate so we need the street space for games, Face-painter, Kona Truck, etc.

How many barricades are you requesting (max. 10)? 4

Approximate Number Attending: Approx 150

Date of Council Approval/Denial: _____

Council Resolution Number: _____

It is also safer so kids don't run out into traffic.

City Council Office Document
Revised August 2021
A:Block Party Form

Meeting was called to order at 8:06 p.m. by Council Vice President Jim Jolly. Present: Vice President Laura Toy, Scott Bahr, Rob Donovic, Scott Morgan, Brandon McCullough. Absent: Kathleen McIntyre

Elected and appointed officials present: Maureen Miller Brosnan, Mayor, Susan Nash, City Clerk, Paul Bernier, City Attorney, Todd Zilincik, City Engineer, LaShawn Thomas, Director of Governmental Affairs, Thomas Goralski Police Chief, Brandie Isaacson, Housing Director, Ted Davis, Superintendent of Parks and Recreation, Jacob Rushlow, Assistant Superintendent of Public Works.

Councilmember Scott Bahr led the Pledge of Allegiance.

2. REQUEST TO WAIVE STREETLIGHT REQUIREMENT: Enrico Soave, Belaggio Homes, re: for the Livonia Manor 3 site condominiums.

   Enrico Soave, Belaggio Homes, 37771 Seven Mile Road, Livonia, presented the request to Council.

   Councilmember Rob Donovic offered an approving motion for the Consent agenda.

   Councilmember Scott Bahr asked if this was the neighborhood at Seven and Merriman, Enrico Soave confirmed.

   DIRECTION: APPROVAL CONSENT

Belaggio Homes
INC

37771 Seven Mile Road, Suite C, Livonia, MI 48152
P # (734) 469-4894 F # (734) 469-4894
belaggiohomes@yahoo.com

Thursday, September 15, 2022

City of Livonia
Council's Office
33000 Civic Center Drive
Livonia, MI 48154

Re: Waiver of Street Lighting Requirement for Livonia Manor 3

Dear Honorable Council Members:

In regards to the street lighting requirement for Livonia Manor 3, we respectfully request that this requirement be waived as both adjacent site condominiums (Livonia Manor I and II) do not have street lights.

Thank you in advance for your consideration.

Sincerely,

Enrico Soave

LETTER TO THE LIVONIA CITY COUNCIL

2.

Council Office
September 16, 2022

MEETING DATE	PREPARED BY
S092622/R100522	Sara Kasprowicz, Council Office Manager,

AGENDA ITEM

REQUEST TO WAIVE STREETLIGHT REQUIREMENT: Enrico Soave, Bellagio Homes, re: for the Livonia Manor 3 site condominiums.

BACKGROUND

REQUEST TO WAIVE STREETLIGHT REQUIREMENT: Enrico Soave, Bellagio Homes, re: for the Livonia Manor 3 site condominiums.

RECOMMENDATION

To approve as submitted.

FISCAL CONSIDERATION

None

ATTACHMENTS

1. S092622 Bellagio Homes Street light waiver

APPROVED BY

Meeting was called to order at 8:06 p.m. by Council Vice President Jim Jolly. Present: Vice President Laura Toy, Scott Bahr, Rob Donovic, Scott Morgan, Brandon McCullough. Absent: Kathleen McIntyre

Elected and appointed officials present: Maureen Miller Brosnan, Mayor, Susan Nash, City Clerk, Paul Bernier, City Attorney, Todd Zilincik, City Engineer, LaShawn Thomas, Director of Governmental Affairs, Thomas Goralski Police Chief, Brandie Isaacson, Housing Director, Ted Davis, Superintendent of Parks and Recreation, Jacob Rushlow, Assistant Superintendent of Public Works.

Councilmember Scott Bahr led the Pledge of Allegiance.

3. REQUEST FOR AUTHORIZATION TO PURCHASE THREE REPLACEMENT VEHICLES AND ADDITIONAL EXPENDITURE: Division of Police, re: in the amount of $14,091.00, to complete the previously authorized award of bid for twelve vehicles that were unavailable to purchase due to manufacturing issues. (CR 61-22)

   Thomas Goralski, Livonia Police Chief, presented the request to Council.

   Council Vice President Laura Toy offered an approving motion for the Consent agenda.

   Darryl Smith, 14006 Brookfield, asked if the blue lives matter flags would be in the police vehicles.

   DIRECTION: APPROVAL CONSENT

LETTER TO THE LIVONIA CITY COUNCIL

3.

Police
September 15, 2022

MEETING DATE	PREPARED BY
S092622/R100522	Diane Warterian, Program Supervisor,

AGENDA ITEM

REQUEST FOR AUTHORIZATION TO PURCHASE THREE REPLACEMENT VEHICLES AND ADDITIONAL EXPENDITURE: Division of Police, re: in the amount of $14,091.00, to complete the previously authorized award of bid for twelve vehicles that were unavailable to purchase due to manufacturing issues. (CR 61-22)

BACKGROUND

Per Council Resolution #61-22, council waived the bidding process and approved the Police Department on March 15, 2022, to purchase 12 new vehicles. However, due to supply chain issues, we were only able to purchase 9 new 2022 model vehicles. We now have an opportunity to purchase the remaining 3 vehicles, in a newer 2023 model year, at an additional cost of $14,091.00.

RECOMMENDATION

The Livonia Division of Police is recommending the purchase of 3 vehicles that were originally approved by council, for $114,236.00, but were unavailable at that time. The vehicles are now available in the 2023 model year, but will cost an additional $14,091.00. The new total cost is $128,327.00 and funds are available and budgeted in accounts at 101-325-985-000 and 101-302-985-000 for this purpose.

FISCAL CONSIDERATION

Patrol Vehicles
(2) 2023 Dodge Durango Police Package @ $42,644.00 each $85,288.00

Traffic Vehicle
(1) 2023 Dodge Durango Police Package @ $43,039.00 each $43,039.00

Original Cost of (3) 2022 Vehicles	$114,236.00
Cost of (3) 2023 Vehicles	$128,327.00
Additional funds requested	$14,091.00

We request to purchase the following utilizing the State of Michigan bid:

(2) 2022 Dodge Durango Police Pursuit Package AWD @ $42,644.00 each
LaFontaine CDJR - Lansing
6131 S. Pennsylvania Avenue
Lansing, MI 48911
(517) 394-1022

(1) 2022 Dodge Durango Police Pursuit Package AWD @ $43,039.00 (Total $128,327.00)
LaFontaine CDJR - Lansing
6131 S. Pennsylvania Avenue
Lansing, MI 48911
(517) 394-1022

ATTACHMENTS

1. CR# 61-22 Purchase of 12 vehicles
2. LaFontaine Quotes 2023 Durangos

APPROVED BY

Date: September 16, 2022

Thomas Goralski, Police Chief

Date: September 16, 2022

Michael Slater, Finance Director

Date: September 16, 2022

Maureen Miller Brosnan, Mayor

SUSAN M. NASH
CITY CLERK

LORI L. MILLER
DEPUTY CLERK

OFFICE OF THE CITY CLERK

33000 CIVIC CENTER DRIVE
LIVONIA, MICHIGAN 48154-3097
(734) 466-2230
FAX: (734) 421-1147

March 15, 2022

Signature Ford
1960 E. Main Street
Owosso, MI 48867

Todd Wenzel Chevrolet
3156 Highland Drive
P.O. Box 310
Hudsonville, MI 49426

Berger Chevrolet
2525 28th Street
Grand Rapids, MI 49512

LaFontaine CDJR – Lansing
6131 S. Pennsylvania Avenue
Lansing, MI 48911

Dear Sir or Madam:

The Council of the City of Livonia, at a Regular Meeting held February 28, 2022, adopted the following resolution:

> **#61-22** RESOLVED, that having considered the report and recommendation of the Chief of Police, dated February 3, 2022, which bears the signatures of the Director of Finance and the City Attorney, and is approved for submission by the Mayor, the Council does hereby authorize the purchase of eight (8) marked and four (4) unmarked police vehicles to be used by the Patrol, Traffic and Intelligence Bureaus utilizing the State of Michigan and the counties of Oakland and Macomb consortium bid pricing in a total amount not to exceed $463,063.81, to be expended from funds already budgeted for this purpose as specified below:
>
> Six (6) marked vehicles which would be utilized by officers assigned to uniform patrol assignments, with such proposed purchase to utilize $231,766.81 budgeted in Account No. 101-325-985-000;
>
> Two (2) marked vehicles which would be utilized by officers assigned to uniform traffic assignments, with such proposed purchase to utilize $76,138.00 budgeted in Account No. 101-302-985-000;
>
> Four (4) unmarked vehicles which would be utilized by officers assigned to undercover assignments, with such proposed purchase to utilize $155,159.00 budgeted in Account No. 101-329-985-000.

Requested Vehicles to Purchase

Two (2) 2022 Ford Utility AWD Interceptors from Signature Ford, 1960 E. Main Street, Owosso, MI 48867, at a cost of $37,796.00 each, for a total amount not to exceed $75,592.00, through the Macomb County consortium;

One (1) 2022 Chevrolet Traverse AWD from Berger Chevrolet, 2525 28th Street, Grand Rapids, MI 49512, in the amount of $38,449.00, through the Macomb County consortium;

One (1) 2022 Ford Explorer 4X4 XLT from Signature Ford, 1960 E. Main Street, Owosso, MI 48867, in the amount of $39,047.00, through the Macomb County consortium;

One (1) 2022 Ford Bronco Sport Badlands 4X4 from Signature Ford, 1960 E. Main Street, Owosso, MI 48867, in the amount of $35,681.00, through the Macomb County consortium;

One (1) 2022 Ford Mustang Fastback from Signature Ford, 1960 E. Main Street, Owosso, MI 48867, in the amount of $41,982.00, through the Macomb County consortium;

One (1) 2022 Chevrolet Tahoe from Todd Wenzel Chevrolet, 3156 Highland Drive, PO Box 310, Hudsonville, MI 49426, in the amount of $42,182.00, through the Oakland County consortium;

One (1) 2022 Dodge Durango Police Pursuit Package AWD from LaFontaine CDJR – Lansing, 6131 S. Pennsylvania Avenue, Lansing, MI 48911, in the amount of $38,342.00, through the State of Michigan consortium;

Four (4) 2022 Dodge Durango Police Packages AWD from LaFontaine CDJR – Lansing, 6131 S. Pennsylvania Avenue, Lansing, MI 48911, at a cost of $37,947.00 each, for a total amount not to exceed $151,788.00, through the State of Michigan consortium;

FURTHER, the Council does hereby determine to authorize the said purchases without competitive bidding inasmuch as the same is based upon the low State of Michigan, Macomb County or Oakland County

consortium bids and such action is taken in accordance with the provisions set forth in Section 3.04.140.D4 of the Livonia Code of Ordinances, as amended.

Very truly yours,

Susan M. Nash

Susan M. Nash, City Clerk

SMN/llm

Xc: LPD

LaFontaine CDJR-Lansing
6131 S. Pennsylvania Ave.
Lansing, MI 48911
517-394-1022-Direct
517-394-1205-Fax
mdeacon@lafontaine.com

Name: City of Livonia
Address:
City: State: Zip:
Contact: Rollie Hoskin
Phone: 734.466.2311
Email: rollie.hoskin@livonia

Date: 8/17/2022
Quote # 081722

State of Michigan		
	2023 Dodge Durango Pursuit AWD	$37,980.00
22Z	5.7L V8 Hemi	$2,995.00
PXJ	DB Black	
LNF	Black Left LED Spot Lamps	$595.00
LNA	Black Right LED Spot Lamps	$550.00
GXF	Entire Fleet Key (FREQ 1)	$150.00
CW6	Deactivate Doors/Windows	$77.00
ADL	Skid Plate Group	$297.00
	Note per contract delivery is available @ $2.00 per one way mileage.	
	By signing here you are agreeing to the purchase agreement for stated vehicle or	
	vehicles X_____	
	Total Cost:	$42,644.00

Signed *Michelle Deacon*

LaFontaine CDJR-Lansing
6131 S. Pennsylvania Ave.
Lansing, MI 48911
517-394-1022-Direct
517-394-1205-Fax
mdeacon@lafontaine.com

Name: City of Livonia
Address:
City: State: Zip:
Contact: Rollie Hoskin
Phone: 734.466.2311
Email: rollie.hoskin@livonia

Date: 8/17/2022
Quote # 081722

State of Michigan		
	2023 Dodge Durango Pursuit AWD	$37,980.00
22Z	5.7L V8 Hemi	$2,995.00
PDN	Destroyer Grey	$395.00
LNF	Black Left LED Spot Lamps	$595.00
LNA	Black Right LED Spot Lamps	$550.00
GXF	Entire Fleet Key (FREQ 1)	$150.00
CW6	Deactivate Doors/Windows	$77.00
ADL	Skid Plate Group	$297.00
	Note per contract delivery is available @ $2.00 per one way mileage.	
	By signing here you are agreeing to the purchase agreement for stated vehicle or	
	vehicles X_____	
	Total Cost:	$43,039.00

Signed *Michelle Deacon*

Meeting was called to order at 8:06 p.m. by Council Vice President Jim Jolly. Present: Vice President Laura Toy, Scott Bahr, Rob Donovic, Scott Morgan, Brandon McCullough. Absent: Kathleen McIntyre

Elected and appointed officials present: Maureen Miller Brosnan, Mayor, Susan Nash, City Clerk, Paul Bernier, City Attorney, Todd Zilincik, City Engineer, LaShawn Thomas, Director of Governmental Affairs, Thomas Goralski Police Chief, Brandie Isaacson, Housing Director, Ted Davis, Superintendent of Parks and Recreation, Jacob Rushlow, Assistant Superintendent of Public Works.

Councilmember Scott Bahr led the Pledge of Allegiance.

4. REQUEST TO APPROVE PROVIDER PARTICIPATION AGREEMENT FOR THE PERIOD FY 2022-2026 BETWEEN THE CITY OF LIVONIA AND MICHIGAN STATE HOUSING DEVELOPMENT AUTHORITY (MSHDA): Department of Finance, Water Administration, re: with grant resources to be used for qualifying Livonia homeowners with delinquent water utility bills.

   Connie Kumpula, Chief Accountant, presented the request to Council.

   Council Vice President Laura Toy offered an approving motion for the Consent agenda.

   DIRECTION: APPROVAL CONSENT

LETTER TO THE LIVONIA CITY COUNCIL

4.

Finance
September 14, 2022

MEETING DATE	PREPARED BY
S092622/R100522	Connie Kumpula, Chief Accountant

AGENDA ITEM

REQUEST TO APPROVE PROVIDER PARTICIPATION AGREEMENT FOR THE PERIOD FY 2022-2026 BETWEEN THE CITY OF LIVONIA AND MICHIGAN STATE HOUSING DEVELOPMENT AUTHORITY (MSHDA): Department of Finance, Water Administration, re: with grant resources to be used for qualifying Livonia homeowners with delinquent water utility bills.

BACKGROUND

The City of Livonia would like to enter into a provider-participation agreement with the Michigan State Housing Development Authority (MSHDA). MSHDA opened the Michigan Homeowner Assistance Fund (MIHAF) program on February 14, 2022. Michigan was allocated $242.8 million from the American Rescue Plan Act of 2021's (the ARP) Homeowner Assistance Fund (HAF) program, which Governor Gretchen Whitmer designated MSHDA as the program's operating agency. This program can help homeowners with delinquent water utility payments. MSHDA shall be responsible for the selection/qualification of Homeowners to receive MIHAF Program funding. The City may refer potentially eligible borrowers to MSHDA and is encouraged but not required to market the MIHAF Program.

RECOMMENDATION

We ask the Council to authorize the Mayor and City Clerk to execute the attached agreement for our residents' benefit.

FISCAL CONSIDERATION

N/A

ATTACHMENTS

1. Becoming A Partner 2-2022
2. MIHAF Provider Participation Agreement - 11-08-2021

APPROVED BY

Michael T Slater

Date: September 15, 2022

Michael Slater, Finance Director

Date: September 15, 2022

Paul Bernier, City Attorney

Maureen Miller Brosnan

Date: September 16, 2022

Maureen Miller Brosnan, Mayor

STATE OF MICHIGAN

GRETCHEN WHITMER
GOVERNOR

MICHIGAN STATE HOUSING DEVELOPMENT AUTHORITY
LANSING

GARY HEIDEL
ACTING EXECUTIVE DIRECTOR

Become a MIHAF Partner

The Michigan State Housing Development Authority (MSHDA) opened the Michigan Homeowner Assistance Fund (MIHAF) program on February 14, 2022.

Michigan was allocated $242.8 million from the American Rescue Plan Act of 2021's (the ARP) Homeowner Assistance Fund (HAF) program which Governor Gretchen Whitmer designated MSHDA as the program's operating agency.

We can help homeowners with delinquent mortgage/housing payments, delinquent property taxes, delinquent condominium association fees or delinquent utility payments to help them avoid foreclosure, displacement, or utility shut-off once you sign up to participate in this much needed program.

If you are a mortgage lender or servicer, please return the fully executed and completed MIHAF Collaboration Agreement and Service Provider Contact and ACH Instructions documents to MSHDA-HO-HAF-Program@michigan.gov.

If you are a County Treasurer, condominium association, utility company, local municipality collecting water/sewer payments, land contract seller or land contract management company, mobile home consumer lender or park manager, or broadband internet provider, please return the fully executed and completed MIHAF Provider Participation Agreement and Service Provider Contact and ACH Instructions documents to MSHDA-HO-HAF-Program@michigan.gov.

You only need to sign up one time. Your name will be added to our Partner Provider Database.

We always disburse MIHAF funds directly to the MIHAF Program Partner to be applied to your client's delinquent account once the homeowner is determined eligible for the MIHAF program assistance.

If you need further information please contact us 517-335-6481 or email your questions to MSHDA-HO-HAF-Program@michigan.gov.

Michigan Homeowner Assistance Fund
Michigan State Housing Development Authority
Provider Participation Agreement

This Participation Agreement (Agreement) made this _____day of _____, 20___ by and between the Michigan State Housing Development Authority (MSHDA) and _____ (Provider), the undersigned, and hereby confirm their mutual agreement on the following principles relating to the Michigan Homeowner Assistance Fund (MIHAF).

RECITALS:

WHEREAS, MSHDA has created a federally funded program under its Michigan Homeowner Assistance Fund (MIHAF) Program; and

WHEREAS the MIHAF program was established to mitigate financial hardships associated with the coronavirus pandemic by providing funds to eligible entities, the Provider(s) as described herein, for the purpose of preventing homeowner mortgage delinquencies, defaults, foreclosures, loss of utilities or home energy services, and displacements of qualified homeowners ("Homeowners") experiencing financial hardship after January 21, 2020, through qualified expenses related to mortgages and housing, for the benefit of those Homeowners; and

WHEREAS, Provider is mortgage-loan servicer, mortgage holder, County Treasurer, land contract vendor, condominium association, or provider of public utilities, to whom one or more debts are owed that are eligible as Qualified Expenses under the MIHAF; and

WHEREAS, if a mortgage-loan servicer or mortgage-holder, Provider is a State, Federal, or national bank regulated by the Federal Reserve, a national bank or federally chartered bank regulated by the Office of the Comptroller of the Currency (OCC), a state bank regulated by the Federal Deposit Insurance Corporation (FDIC), a state or federal chartered credit union regulated by the National Credit Union Administration (NCUA), a state-chartered bank, credit union, or mortgage servicing organization regulated by the Michigan Department of Insurance and Financial Services (DIFS), or a governmental agency, that own the mortgage servicing rights of mortgage loans and services certain mortgage loans for borrowers who may be eligible to participate in the MIHAF program; or

WHEREAS, if a County Treasurer, Provider is the office of the duly designated receipt of real-property taxes for a county of the State of Michigan, with statutory powers of collection and foreclosure pursuant to the General Property Tax Act, Act 206 of 189; or

WHEREAS, if land-contract vendor, Provider is the vendor of an enforceable land contract governing real property located within the State of Michigan, and possessing legitimate powers of forfeiture and/or foreclosure pursuant to Michigan law; or

WHEREAS, if a condominium association, Provider is a legally recognized entity with authority to administer a condominium project located within the State of Michigan, and possessing a power of foreclosure pursuant to the Michigan Condominium Act, Act 59 of 1978; or

WHEREAS, if a provider of public utilities, Provider is an entity that provides electric, gas, home energy, water, internet service, or related goods and services to one or more residential properties within the State of Michigan, possessing a power to discontinue such services in the event of non-payment by the affected residents; and

WHEREAS, the above-defined Provider is able to document their authority to conduct business within the State of Michigan; where Provider is a company, Provider is able to provide a certified copy of Articles of Incorporation/Organization and certificate of Good Standing from the State of Michigan, or comparable verification of legitimate organization, upon request by MSHDA; where Provider is a County Treasurer, Provider is able to provide confirmation of same on County letterhead; where Provider is a land-contract vendor, Provider is able to provider confirmation that Provider is the person or entity eligible to receive payment under the terms of the land contract. If Provider is a non-Michigan business entity, Provider must upon request provide a certified copy of Articles of Incorporation/Organization filed in the State of Incorporation, together with a Certificate of Authority to transact business in Michigan; and

WHEREAS Provider desires to participate in the MIHAF Program; and

WHEREAS Provider understands that participation in the MIHAF Program is voluntary and is distinct from Provider's participation in any other local, state, or federal foreclosure prevention, eviction prevention, or utility-access preservation programs; and

WHEREAS Provider and MSHDA desire to enter into this Agreement to set forth certain premises and mutual covenants:

NOW, WHEREFORE, MSHDA and Provider agree as follows:

1. **Application Process**. Homeowners will access the MIHAF Program though an online MIHAF application, or through a secure phone link, using systems established or designated by MSHDA. Provider understands that it will not be involved in determining eligibility for MIHAF Program, and that MSHDA shall make eligibility determinations according to its sole interpretation of MIHAF program guidelines.

2. **Selection/Qualification of Borrowers**. MSHDA shall be responsible for the selection/qualification of Homeowners to receive MIHAF Program funding. Provider may refer potentially eligible borrowers to MSHDA, and Provider is encouraged but not required to market the MIHAF Program. MSHDA shall make marketing materials available to Provider including web graphics and brochures in pdf format. Providers may refer Homeowners to MIHAF's website at www.michigan.gov/mihaf or MIHAF customer service at 844-756-4423 to apply or for MIHAF Program information.

3. **Point of Contact.** MSHDA shall provide a list of key contacts to Provider. Provider agrees to provide a primary and secondary point of contact, and electronic funds transfer information to MSHDA to facilitate communication and transfer of program funds (**Exhibit A**) and shall provide accessible contacts to MIHAF Program eligible Homeowners to address Provider's participation in the MIHAF Program and the administration of MIHAF payments as to Homeowner's accounts with Provider.

4. **ACH Payments**. Provider shall promptly provide ACH transmission information to MSHDA, as described in **Exhibit A**. Provider agrees that all MIHAF payments will be made via ACH.

5. **Information Sharing/Written Authorization**. MSHDA shall be responsible for procuring written authorization from each Homeowner to share information with Provider. A copy of the signed authorization will be provided to Provider through secured e-mail or web portal. Provider agrees to communicate information about the resolution of the assisted Homeowner's deficiency or default including suspension or termination of foreclosure or forfeiture proceedings, or other resolution options, to MSHDA. MSHDA and Provider agree to use a defined automated and secure process to submit borrowers to Provider for workout consideration.

6. **Transmission of Non-Public Personal Information**. All communication that includes a Homeowner's **Nonpublic Personal Information** (as defined below) between MSHDA and Provider shall be sent through encrypted e-mail, secure loan portal or other similar secure electronic delivery system. MSHDA and Provider agree that they will maintain or implement appropriate measures designed to (a) ensure the security and confidentiality of any Nonpublic Personal information it received from the other party, (b) protect against any anticipated threats or hazards to the security or integrity of such information, (c) protect against unauthorized access to or use of such information that could result in substantial harm or inconvenience to the subject of such information, (d) ensure the proper disposal of all Nonpublic Personal Information received from the other party upon the termination of the Agreement for any reason, unless the information is required to be retained for legal or regulatory record retention purposes, (e) treat the Nonpublic Personal Information with at least the same degree of care that it uses to protect its own confidential and proprietary information of a similar nature but with no less than a reasonable degree of care, and (f) implement or utilize appropriate technological safeguards that are at least in compliance with the Gramm-Leach Bliley Act and generally recognized industry standards.

"Nonpublic Personal Information" means any information received from or provided by the other party which pertains to or identifies an individual, such as name, postal address, e-mail or IP address, facsimile or phone number, mother's maiden name, social security or identification number, transactional, employment, financial data, medical or health records, personal, gender, political profile, account, and password information.

7. **Homeowner Assistance.** Once a Homeowner is accepted to the MIHAF Program, Provider shall not initiate foreclosure, forfeiture, nor collections, and if the Homeowner is already in the foreclosure, forfeiture, or collections process, shall not continue such process during the term of assistance. In the case of utility assistance, utility service shall be restored. Where a Homeowner's obligations to Provider exceed the maximum assistance that the MIHAF Program will pay on Homeowner's behalf, the MIHAF Program may still pay such benefits for the benefit of the Homeowner, but any agreement addressing the remaining deficiency will be strictly between Provider and Homeowner; neither MSHDA nor the MIHAF Program shall have any further obligation as to such a deficiency, nor shall MSHDA participate in the resolution of, nor be a party to, any agreement resolving such a deficiency. Providers are encouraged but not required to consider mechanisms for addressing such a deficiency that will delay the risk of additional default, such as amortizing the deficiency into future payments due from Homeowner.

MSHDA and Provider agree that all MIHAF Program Homeowner assistance options will be conducted in accordance with the MIHAF program descriptions and requirements detailed in the respective program term sheet(s), which are attached as **Exhibit B** and incorporated herein. Although Homeowner may be eligible for more than one type of relief under the MIHAF Program, Homeowner may only receive such relief one time, and once per home address: there shall be no duplication of relief within the MIHAF program, or between the MIHAF program and any other federal assistance programs. Provider recognizes that the MIHAF program is a federal program administered by the U.S. Treasury, may be subject to program guideline changes issued after the date of this agreement, and agrees to abide by the terms of subsequent or superseding federal guidance.

Provider agrees the program guidelines may be amended by MSHDA from time to time. Provider has reviewed the program term sheet and agrees to comply with all Program guidelines as outlined by MSHDA. MSHDA will notify the primary contact provided by Provider of any program amendments and/or changes. Provider is responsible to obtain any required investor and mortgage insurer approval.

8. **MIHAF Program Approval.** Upon notification by MSHDA that a Homeowner has been conditionally approved for MIHAF, Provider agrees to promptly accept or deny each Homeowner's participation in the MIHAF Program. Provider agrees that denial shall be only for good cause such as pending litigation, potential fraud, bankruptcy restrictions, and foreclosure status or if denied by investor or mortgage insurer for good cause.

9. **MIHAF Program.** Provider agrees to provide timely communication of Homeowner's deficiency status to the MSHDA, including sufficient information to identify that the correct deficiency matched to the correct Homeowner, and the amount owed. Provider agrees to apply MIHAF funds towards principal, interest, taxes, and insurance (collectively PITI). MSHDA agrees Provider may apply such funds towards attorney's fees, late charges and NSF fees, property inspection fees, escrow shortage and/or delinquent property taxes, one year of standard homeowner's insurance if forced place insurance has been invoked, and other fees and expenses if they are deemed an advance on Program funds towards delinquent property taxes.

10. **Timing.** Provider acknowledges that it is responsible for timely application of MIHAF Program funds. Provider shall hold the Homeowner harmless if payments are not applied timely. Provider agrees that it will timely provide MSHDA with written reports documenting application of MIHAF Program funds or alternatively to provide MSHDA an exception report for any funds that could not be applied. All remaining delinquencies identified after MIHAF funding must be resolved between Homeowner and Provider. The period of performance for MIHAF Program awards begins on the date hereof and ends on September 30, 2026, unless otherwise extended by U.S. Treasury. Provider shall not be eligible to receive MIHAF Program funds after such period of performance ends.

11. **Repayment of Funds.** Where the Homeowner has an ongoing obligation to the Provider that will continue after application of program funds to the deficiency, such as with an ongoing mortgage loan, MSHDA agrees that Provider will not be required to repay amounts applied to a borrower's loan if that borrower is later determined to be ineligible. If the Provider is eligible to

retain excess funds and overages, those may be retained by Provider and applied for the benefit of the Homeowner's ongoing obligation. Provider may be required by MSHDA to demonstrate how retained excess funds will be applied for the benefit of the homeowner, in such format as MSHDA shall require. If Provider is not eligible to retain and apply excess assistance due to the lack of an ongoing obligation or shall otherwise fail to apply Grant funds to the Homeowner's housing delinquencies, such unapplied funds are the property of MSHDA and shall be promptly returned to Grantor within thirty (30) days of determination of excess funding, but in any event shall not be paid directly to the Homeowner.

12. **Homeowner Actions/Fraud.** Provider agrees to promptly notify MSHDA in writing of any ongoing legal action against a Homeowner, including fraud-related activities.

13. **Cessation of Mortgage Payments.** MSHDA agrees it will promptly provide notice before it ceases payment of MIHAF Program funds to allow Provider time to evaluate the Homeowner for other loss mitigation options.

14. **MIHAF Program Eligibility.** Provider agrees that it is not authorized or empowered to determine and/or communicate to the Homeowner eligibility for MIHAF Program funds. MSHDA agrees that it is not authorized or empowered to determine and/or communicate to the Homeowner eligibility for foreclosure, forfeiture, or shut-off prevention programs of Provider. MSHDA retains sole authority for its MIHAF Program eligibility determination and communication to the Homeowner and Provider. Provider will communicate with Homeowner and MSHDA regarding modification and other Provider-driven approvals.

15. **Provider Legal Compliance Obligations**. Provider recognizes and accepts that the MIHAF Program is a federally funded grant program and acknowledges that failure to abide by MIHAF Program terms may result in recapture of grant funds or other sanctions.

Provider will comply with local, state, and federal laws pertaining to discrimination, including, but not limited to: the Fair Housing Act (42 U.S.C. 3601-19) and implementing regulations; Title VI of the Civil Rights Act of 1964 (42 U.S.C. 2000d-2000d-4) and implementing regulations; Title VIII of the Civil Rights Act of 1968 (as amended by the Fair Housing Amendments Act of 1988) and implementing regulations; the Age Discrimination Act of 1975 (42 U.S.C. 6101-07) and implementing regulations; Title II of the Americans with Disabilities Act (42 U.S.C. 12101, et seq); the Elliott-Larsen Civil Rights Act; and the Michigan Persons With Disabilities Civil Rights Act.

16. **Termination.** Participation in the MIHAF Program is voluntary, and either Provider or Homeowner may terminate their respective participation agreement without cause, with 30 days written notice, unless or until MIHAF Program funds have been paid to Provider by MSHDA and accepted by Provider for the benefit of the Homeowner. Either party may terminate immediately upon material breach from the other party; in event of such termination, Provider shall accept and apply payments as agreed on behalf of a Homeowner already approved prior to the immediate termination, or shall return applicable assistance funds to MSHDA, at Provider's discretion.

Accepted and agreed to by:

Provider: _____

By: _____

Print: _____

Its: _____

Date: _____

Address: _____

_____

Michigan State Housing Development Authority

By: _____

Its: _____

Date: _____

EXHIBIT A
Provider Contact and ACH Instructions

EXHIBIT B
MIHAF Program Term Sheet

Meeting was called to order at 8:06 p.m. by Council Vice President Jim Jolly. Present: Vice President Laura Toy, Scott Bahr, Rob Donovic, Scott Morgan, Brandon McCullough. Absent: Kathleen McIntyre

Elected and appointed officials present: Maureen Miller Brosnan, Mayor, Susan Nash, City Clerk, Paul Bernier, City Attorney, Todd Zilincik, City Engineer, LaShawn Thomas, Director of Governmental Affairs, Thomas Goralski Police Chief, Brandie Isaacson, Housing Director, Ted Davis, Superintendent of Parks and Recreation, Jacob Rushlow, Assistant Superintendent of Public Works.

Councilmember Scott Bahr led the Pledge of Allegiance.

5. REQUEST TO APPROVE PASS THROUGH AGREEMENT FOR THE 2022-2023 FISCAL YEAR BETWEEN THE CITY OF LIVONIA AND SOUTHEAST MICHIGAN COUNCIL OF GOVERNMENTS (SEMCOG): Housing Department, re: with grant funds to be used for the Livonia Community Transit Program to provide planning assistance to identify future transportation needs within the City.

   Brandie Isaacson, Housing Director, presented the request to Council.

   Councilmember Scott Morgan offered an approving motion for the Consent agenda.

   Council Vice President Laura Toy asked if there will be a survey related to transportation. Brandie Isaacson confirmed they are hoping to evaluate the current Senior Program for ways to improve their services.

   DIRECTION: APPROVAL CONSENT

LETTER TO THE LIVONIA CITY COUNCIL

5.

Housing
August 30, 2022

MEETING DATE	PREPARED BY
S092622/R100522	Brandie Isaacson, Director of Housing,

AGENDA ITEM

REQUEST TO APPROVE PASS THROUGH AGREEMENT FOR THE 2022-2023 FISCAL YEAR BETWEEN THE CITY OF LIVONIA AND SOUTHEAST MICHIGAN COUNCIL OF GOVERNMENTS (SEMCOG): Housing Department, re: with grant funds to be used for the Livonia Community Transit Program to provide planning assistance to identify future transportation needs within the City.

BACKGROUND

The Livonia Community Transit (LCT) Program would like approval to enter into a third-party contract with the Southeast Michigan Council of Governments (SEMCOG) to receive a Transportation Equity and Sustainability Infrastructure Grant in the amount of $40,000.00. This grant does require an 18.5% local match of $7,260.00 which has been allocated in the FY 2022-2023 Transportation Budget. The total amount of grant received will be $32,740.00 to be deposited to account no. 288-000-528-050. This funding source will be used for a Transportation Needs Assessment Study which will aid in future planning of the City's transportation programs.

RECOMMENDATION

We ask Council to approve the attached agreement with SEMCOG and authorize these funds to be used for the Livonia Community Transit program to assess the future transportation needs of the City.

FISCAL CONSIDERATION

Community Transit
288-000-528-050 Federal Grant
288-608 Community Transit Program

ATTACHMENTS

1. City of Livonia Grant Agreement
2. Livonia Award

APPROVED BY

Brandie Isaacson, Director of Housing

Date: August 30, 2022

Michael T Slater

Date: September 01, 2022

Michael Slater, Finance Director

Date: September 01, 2022

Paul Bernier, City Attorney

Maureen Miller Brosnan

Date: September 07, 2022

Maureen Miller Brosnan, Mayor

PASS THROUGH AGREEMENT BETWEEN

CITY OF LIVONIA AND

SOUTHEAST MICHIGAN COUNCIL OF GOVERNMENTS

THIS AGREEMENT, made and entered into this __ day of July 2022 by and between CITY OF LIVONIA (here in after, together with its assignees and successors in interest, called the "GRANT RECIPIENT") and SOUTHEAST MICHIGAN COUNCIL OF GOVERNMENTS - a Michigan Regional Planning Commission; 1001 Woodward - Suite 1400, Detroit, Michigan 48226 (hereinafter called SEMCOG). All terms and conditions of the prime contract **2021-0009**, between SEMCOG and the Michigan Department of Transportation are incorporated in this Agreement. In the event of a conflict between the terms and conditions of the subcontract and the prime contract, **2021-0009**, the prime contract prevails.

WITNESSETH:

WHEREAS, SEMCOG, in cooperation with MDOT, FHWA and the FTA, desires to enter into an agreement with the GRANT RECIPIENT;

NOW, THEREFORE, SEMCOG and GRANT RECIPIENT agree that:

GRANT RECIPIENT WILL:

1. GRANT SPECIFICATIONS

   a. The grant award was developed in response to SEMCOG's Planning Assistance Program and approved by the Regional Review Committee.

   b. SCOPE OF WORK: GRANT RECIPIENT shall do, perform and complete in a satisfactory manner, as determined by SEMCOG, the work described in the narrative and budget described in Section 27 of this agreement.

   c. MODIFICATIONS: Unless prior written approval of SEMCOG is obtained, the GRANT RECIPIENT may not modify or change the proposal, timeline, or budget.

   d. METRICS and DELIVERABLES: GRANT RECIPIENT is responsible for the metrics and deliverables proposed in their narrative.

2. ACCOUNTS AND RECORDS

   a. GRANT RECIPIENT will establish and maintain accurate records, in accordance with generally accepted accounting principles, of all expenses incurred for which payment is sought or made under this Agreement, said records to be hereinafter referred to as the "RECORDS." Separate accounts will be established and maintained for all costs incurred under this Agreement.

   b. GRANT RECIPIENT will maintain the RECORDS for at least three (3) years from the date of final payment made by SEMCOG under this Agreement. In the event of a dispute with regard to the allowable expenses or any other issue under this Agreement, GRANT RECIPIENT will thereafter

continue to maintain the RECORDS at least until that dispute has been finally decided and the time for all available challenges or appeals of that decision has expired.

c. SEMCOG and MDOT or its representative may inspect, copy, or audit the RECORDS at any reasonable time after giving reasonable notice.

d. If any part of the work is subcontracted, GRANT RECIPIENT will assure compliance with subsections (a), (b), and (c) above for all subcontracted work.

3. AUDIT OF ACCOUNTS AND RECORDS

a. The GRANT RECIPIENT will require audits to be made to determine, at a minimum, the fiscal integrity of financial transactions and reports and the compliance with laws, regulations, and administrative requirements. Audits will be scheduled in accordance with the requirements of 2 CFR Part 200, including Subpart F – Audit Requirements, as amended.

b. Audits are to be performed by an independent accounting firm and must conform to the regulations and procedures established by the federal Office of Management and Budget as set forth in 49 CFR Part 18, as amended, 2 CFR Part 200, as amended, and such other regulations and procedures established by MDOT, the FHWA, and the FTA. All such audits are subject to review and approval by MDOT, the FHWA, the FTA, and the Office of Inspector General.

c. Audit and Inspection. The GRANT RECIPIENT will comply with the Single Audit Act of 1984, as amended, including, but not limited to, the Single Audit Amendments of 1996 (31 USC 7501-7507), and the requirements of 2 CFR Part 200, including Subpart F – Audit Requirements, as amended, and the provisions of 1951 PA 51, MCL 247-660h, as applicable, that are in effect at the time of Agreement award with regard to audits.

i. Grant recipients expending a total of Seven Hundred Fifty Thousand Dollars ($750,000.00) or more in federal funds from one or more funding sources in their fiscal year must have a single audit conducted for that year. The Seven Hundred Fifty Thousand Dollars ($750,000.00) threshold represents all federal funding sources. This is in accordance with the Single Audit Act of 1984, as amended, and 2 CFR Part 200 Subpart F, as amended.

ii. Grant recipients expending less than Seven Hundred Fifty Thousand Dollars ($750,000.00) in federal funds must submit a letter to MDOT advising that a single audit was not required. The letter will indicate the applicable fiscal year, the amount of federal funds spent, the name(s) of the MDOT federal programs, and the Catalog of Federal Domestic Assistance (CFDA) grant number(s).

iii. Grant recipients must complete their single audits electronically through the Federal Audit Clearinghouse website (http://harvester.census.gov.fac/). Users are instructed to create an online report ID and then to complete Form SF-SAC prior to submitting their reporting packages. The audit will be completed and submitted electronically within thirty (30) days after receipt of the agency's report(s) or within nine (9) months after the end of the agency's fiscal year, whichever is earlier.

iv. Grant recipients will also comply with applicable state laws and regulations relative to audit requirements.

v. Grant recipients will not charge audit costs to MDOT's federal programs that are not in accordance with the aforementioned 2 CFR Part 200 requirements.

vi. All grant recipients are subject to the federally-required monitoring activities, which may include limited scope reviews and other on-site monitoring.

d. The provisions set forth in subsections (a), (b), and (c) above will be included in all contracts and subcontracts relating to this Agreement.

4. BILLINGS AND PROGRESS REPORTS

Submit monthly billing and progress reports to SEMCOG on work accomplished based on the approved grant award narrative and budget. Progress reports will be in a form and manner acceptable to SEMCOG. A billing and progress report will be submitted not later than fifteen (15) days after the end of each billing period.

GRANT RECIPIENT agrees that the costs reported to SEMCOG for this Agreement will represent only those items that are properly chargeable in accordance with this Agreement. GRANT RECIPIENT also certifies that it has read the Agreement terms and has made itself aware of the applicable laws, regulations, and terms of this Agreement that apply to the reporting of costs incurred under the terms of this Agreement.

5. FINAL REPORT

Submit a final performance report covering the grant award accomplishments not later than ninety (90) days following the end of the grant award time period.

6. INDEMNIFY AND SAVE HARMLESS

In addition to the protection afforded by any policy of insurance, GRANT RECIPIENT agrees to indemnify and save harmless the State of Michigan, the Michigan State Transportation Commission, MDOT, FHWA, FTA, SEMCOG, and all officers, agents, and employees thereof:

a. From any and all claims by persons, firms or corporations for labor, services, materials, or supplies provided to GRANT RECIPIENT in connection with GRANT RECIPIENT performance under this Agreement; and

b. From any and all claims for injuries to or death of any and all persons, for loss of or damage to property, for environmental damage or degradation, response and clean-up costs, and for attorney fees and related costs arising out of, under, or by reasons of GRANT RECIPIENT performance under this Agreement, except claims resulting from the sole negligence or willful acts or omissions of said indemnitee, its agents, or its employees; and

c. Against all claims, suites, costs, damages, and expenses that the State of Michigan, the Michigan State Transportation Commission, MDOT, SEMCOG, FHWA, and/or the FTA may sustain by reason of any scandalous, libelous or unlawful matter obtained or alleged to be obtained in the work, or any infringement or violation by the work of any copyright or property right.

SEMCOG will not be subject to any obligations or liabilities by contractors of GRANT RECIPIENT or its GRANT RECIPIENTS or any other person not a party to the Agreement without

its specific consent and notwithstanding its concurrence in or approval of the award of any contract or subcontract or the solicitation thereof.

It is expressly understood and agreed that GRANT RECIPIENT will take no action or conduct that arises either directly or indirectly out of its obligations, responsibilities, and duties under this Agreement that results in claims being asserted against or judgments being imposed against the State of Michigan, SEMCOG, MDOT, the Michigan State Transportation Commission, FHWA, and/or the FTA, as applicable.

In the event that the same occurs, it will be considered as a breach of this Agreement, thereby giving the State of Michigan, MDOT, SEMCOG, the Michigan State Transportation Commission, FHWA, and/or the FTA a right to seek and obtain any necessary relief or remedy, including, but not limited to, a judgment for money damages.

GRANT RECIPIENT will provide, at grant award cost, public liability, property damage, and workers' compensation insurance, insuring as they may appear all claims that may arise out of the GRANT RECIPIENT operations under this Agreement.

7. APPRAISAL OF GRANT AWARD

Through the SEMCOG staff representative, reserve the right to advise and recommend changes to each task and activity appearing in the narrative and the basic study methods, procedures, and analytical techniques to be applied in carrying out those portions of each portion of the narrative that, in total or in part, are financed with funds from FHWA, or the FTA.

8. STAFF REPRESENTATIVE

Provide a SEMCOG staff representative to assist or otherwise advise GRANT RECIPIENT in the performance of its transportation planning responsibilities as provided herein.

9. DOCUMENT APPROVAL

Develop and maintain appropriate procedures to reflect the various responsibilities of document review and approval at the state and federal levels.

10. REIMBURSABLE COSTS

Reimburse GRANT RECIPIENT for costs properly chargeable in accordance with this Agreement and eligible for federal reimbursement under the provisions of OMB Circular A-87. Reimbursements will be based on actual costs.

11. REIMBURSEMENT TO GRANT RECIPIENT FOR COSTS INCURRED

SEMCOG hereby agrees that payment to the GRANT RECIPIENT shall be made within (10) days of the receipt of payment from the State of Michigan.

12. AUDIT

In the event that an audit performed by or on behalf of SEMCOG indicates an adjustment to the costs reported under this Agreement or questions the allowability of an item of expense, SEMCOG will promptly submit to GRANT RECIPIENT a Notice of Audit Results and a copy of the audit report, which may supplement or modify any tentative findings verbally communicated to GRANT RECIPIENT at the completion of an audit.

Within sixty (60) days after the date of the Notice of Audit Results, GRANT RECIPIENT will (a) respond in writing to SEMCOG indicating whether or not it concurs with the audit report, (b) clearly explain the nature and basis for any disagreement as to a disallowed item of expense, and (c) submit to MDOT and SEMCOG a written explanation as to any questioned or no opinion expressed item of expense hereinafter referred to as the "RESPONSE." The RESPONSE will be clearly stated and will provide any supporting documentation necessary to resolve any disagreement or questioned or no opinion expressed item of expense. Where the documentation is voluminous, GRANT RECIPIENT may supply appropriate excerpts and make alternate arrangements to conveniently and reasonably make that documentation available for review by SEMCOG and MDOT. The RESPONSE will refer to and apply the language of the Agreement. GRANT RECIPIENT agrees that failure to submit a RESPONSE within the sixty (60) day period constitutes agreement with any disallowance of an item of expense and authorizes SEMCOG and MDOT to finally disallow any items of questioned or no opinion expressed cost.

MDOT and SEMCOG will make its decision with regard to any Notice of Audit Results and RESPONSE within one hundred twenty (120) days after the date of the Notice of Audit Results. If SEMCOG determines that an overpayment has been made to GRANT RECIPIENT, GRANT RECIPIENT will repay that amount to SEMCOG or reach agreement with SEMCOG on a repayment schedule within thirty (30) days after the date of an invoice. If GRANT RECIPIENT fails to repay the overpayment or reach agreement with SEMCOG on a repayment schedule within the thirty (30) day period, GRANT RECIPIENT agrees that SEMCOG will deduct all or a portion of the overpayment from any funds then or thereafter payable by SEMCOG, to GRANT RECIPIENT under this Agreement or any other agreement or payable to GRANT RECIPIENT under the terms of 1951 PA, as applicable. Interest will be assessed on any partial payments or repayments or repayment schedules based on the unpaid balance at the end of each month until the balance is paid in full. The assessment of interest will begin thirty (30) days from the date of the invoice. The rate of interest will be based on the Michigan Department of Treasury common cash funds interest earnings. The rate of interest will be reviewed annually by SEMCOG and adjusted as necessary based on the Michigan Department of Treasury common cash funds interest earnings. GRANT RECIPIENT expressly consents to this withholding or offsetting of funds under those circumstances, reserving the right to file a lawsuit in the Court of Claims to contest SEMCOG's decision only as to any item of expense the disallowance of which was disputed by GRANT RECIPIENT in a timely filed RESPONSE.

13. PROMPT PAYMENT

GRANT RECIPIENT agrees to pay each subcontractor for the satisfactory completion of work associated with the subcontract no later than ten (10) calendar days from the receipt of each payment GRANT RECIPIENT receives from SEMCOG. This requirement is also applicable to all sub-tier GRANT RECIPIENTs and will be made a part of all subcontract agreements.

This prompt payment provision is a requirement of 49 CFR, Part 26, as amended, and does not confer third-party beneficiary right or other direct right to a GRANT RECIPIENT against the SEMCOG or MDOT. This provision applies to both Disadvantaged Business Enterprise (DBE) and non-DBE GRANT RECIPIENTS.

GRANT RECIPIENT further agrees that it will comply with 49 CFR, Part 26, as amended, and will report any and all DBE GRANT RECIPIENT payments to MDOT semi-annually in the format set forth in Appendix D, dated July 2010, attached hereto and made a part hereof, or any other format acceptable to MDOT.

14. FHWA AND FTA PARTICIPATION

Certain funding under this Agreement is contingent on participation from year to year by FHWA or FTA. No obligations for such costs not reimbursable by FHWA or FTA will be knowingly entered into and billed to SEMCOG for reimbursement. Incurred costs that are not reimbursable by FHWA or FTA will be the sole responsibility of the GRANT RECIPIENT.

15. FEDERAL LAWS AND REGULATIONS

All applicable federal, state, and local laws, regulations, and ordinances are incorporated into and made a part of this Agreement, and the parties will comply therewith.

16. NONDISCRIMINATION, DBE, AND ENVIRONMENTAL REQUIREMENTS

GRANT RECIPIENT will comply with and will require any contractor or GRANT RECIPIENT to comply with the following:

a. In connection with the performance of the Agreement, GRANT RECIPIENT (hereinafter in Appendix A referred to as the "contractor") agrees to comply with the State of Michigan provisions for "Prohibition of Discrimination in State Contracts," as set forth in Appendix A, dated March 2010, attached hereto and made a part hereof. This provision will be included in all subcontracts relating to this Agreement.

b. During the performance of this Agreement, GRANT RECIPIENT, for itself, its assignees, and its successors in interest (hereinafter in Appendix B referred to as the "contractor"), agrees to comply with the Civil Rights Act of 1964, being P.L. 88-352, 78 Stat. 241, as amended, being Title 42 USC Sections 1971, 1975a-1975d, and 2000a-2000h-6, and the Regulations of the United States Department of Transportation (49 CFR, Part 21) issued pursuant to said Act, including Appendix B, dated March 2010, attached hereto and made a part hereof.

c. GRANT RECIPIENT will carry out the applicable requirements of the MDOT's Disadvantaged Business Enterprise (DBE) program and 49 CFR Part 26, including, but not limited to those requirements set forth in Appendix C, dated October 1, 2005, attached hereto and made a part hereof, with respect to the UWP, said UWP allowing GRANT RECIPIENT to operate under the provisions of its own MDOT-approved DBE program.

d. GRANT RECIPIENT will make achieving environmental justice a part of its mission by identifying and addressing, as appropriate, disproportionately high and adverse human health or environmental effects of its programs, policies, and activities on minority populations and low income populations.

e. GRANT RECIPIENT further certifies that it agrees to use the E-Verify system to verify that all persons hired during the contract term by the Contractor are legally present and authorized to work in the United States.

17. REPORT LANGUAGE

All reports published by GRANT RECIPIENT will contain the following statement in the credit line if MDOT or FHWA or FTA does not subscribe to the findings:

> *"The contents of this _____(report) reflect the view of _____ (the author), who is responsible for the facts and accuracy of the data presented herein. The contents do not necessarily reflect the official view or policies of_____ (the name of nonconcurring party.) This _____ (reports) does not constitute a standard, specification, or regulation."*

18. OWNERSHIP OF DATA

Ownership of data collected hereunder will be vested in GRANT RECIPIENT with full rights of free access and use thereto guaranteed to SEMCOG, MDOT, FHWA and FTA, and/or all other participating agencies.

19. PATENT RIGHTS AND COPYRIGHTS

Patent rights and copyrights will be the property of GRANT RECIPIENT. GRANT RECIPIENT will obtain the written approval of the MDOT prior to submitting applications in the name of GRANT RECIPIENT for copyrights or patents on any papers, reports, forms, or other materials that are a part of the GRANT RECIPIENT work as above noted under this Agreement, said approval being necessary before, during, and after the performance of said work by GRANT RECIPIENT with respect to this Agreement. SEMCOG, MDOT, and FHWA and/or FTA reserve a royalty-free, non-exclusive, and irrevocable license to reproduce, publish, or otherwise use and authorize others to use the work for governmental purposes.

20. UNFAIR LABOR PRACTICES

In accordance with 1980 PA 278, MCL 423.321 *et seq.*; MSA 17.458(22) *et seq*., GRANT RECIPIENT, in performance of this Agreement, will not enter into a contract with a GRANT RECIPIENT, manufacturer, or supplier listed in the register maintained by the United States Department of Labor of employers who have been found in contempt of court by a federal court of appeals on not less than three (3) separate occasions involving different violations during the preceding seven (7) years for failure to correct an unfair labor practice, as prohibited by Section 8 of Chapter 372 of the National Labor Relations Act, 29 USC 158. MDOT may void this Agreement if the name of GRANT RECIPIENT or the name of a GRANT RECIPIENT, manufacturer, or supplier utilized by GRANT RECIPIENT in the performance of this Agreement subsequently appears in the register during the performance of this Agreement.

21. INDIVIDUALS WITH DISABILITIES

GRANT RECIPIENT agrees that not otherwise qualified individuals with disabilities in the United States, as defined in Section 1630.2 of the Americans with Disabilities Act, Title 42, USC 12101, will, solely by reason of their disabilities, be excluded from the participation in, be denied the benefits of, or be subjected to discrimination under any program or activity receiving benefits under this Agreement.

22. CERTIFICATION

GRANT RECIPIENT signature on this Agreement constitutes GRANT RECIPIENT certification of "status" under penalty of perjury under the laws of the United States with respect to 49 CFR Part 29 pursuant to Executive Order 12549.

The certification included as a part of this Agreement as Attachment A is Appendix A of 49 CFR Part 29 and applies to GRANT RECIPIENT (referred to in Appendix A as "the prospective primary participant").

GRANT RECIPIENT is responsible for obtaining the same certification from all GRANT RECIPIENTS under this Agreement by inserting the following paragraph in all subcontracts:

> *"The GRANT RECIPIENT's signature on this Agreement constitutes the GRANT RECIPIENT's certification of 'status' under penalty of perjury under the laws of the United States with respect to 49 CFR Part 29 pursuant to Executive Order 12549. The certification included as a part of this Agreement as Attachment B is Appendix B of 49 CFR Part 29."*

This certification is required of all GRANT RECIPIENTS, testing laboratories, and other lower tier participants with which GRANT RECIPIENT enters into a written arrangement for the procurement of goods or services provided for in this Agreement.

23. APPROVALS, REVIEWS, AND INSPECTIONS

Any approvals, acceptances, reviews, and inspections of any nature by SEMCOG and MDOT will not be construed as a warranty or assumption of liability on the part of SEMCOG and MDOT. It is expressly understood and agreed that any such approvals, acceptances, reviews, and inspections are for the sole and exclusive purposes of SEMCOG and MDOT, which is acting in a governmental capacity under this Agreement, and that such approvals, acceptances, reviews, and inspections are a governmental function incidental to the performance of the UWP under this Agreement.

Any such approvals, acceptances, reviews, and inspections by SEMCOG and MDOT will not relieve GRANT RECIPIENT of its obligations hereunder, nor are such approvals, acceptances, reviews and inspections by SEMCOG and MDOT to be construed as a warranty as to the propriety of GRANT RECIPIENT performance but are undertaken for the sole use and information of SEMCOG and MDOT.

24. TERMINATION

SEMCOG may terminate this Agreement for convenience or cause, as set forth below, before the services are completed. Written notice of termination will be sent to GRANT RECIPIENT. GRANT RECIPIENT will be reimbursed in accordance with the following:

a. Termination for Convenience:

If SEMCOG terminates this Agreement for convenience, SEMCOG will give GRANT RECIPIENT written notice of such termination thirty (30) days prior to the date of such termination, and GRANT RECIPIENT will be reimbursed for all costs incurred for work accomplished on the UWP up to receipt of the notice of termination. Such reimbursement will be as set forth in Section 16, but not to exceed the amount set forth in the grant award. SEMCOG will receive the work product produced by GRANT RECIPIENT under this Agreement up to the time

of termination, prior to GRANT RECIPIENT being reimbursed. In no case will the compensation paid to GRANT RECIPIENT for partial completion of services exceed the amount GRANT RECIPIENT would have received had the services been completed.

b. Termination for Cause:

In the event GRANT RECIPIENT fails to complete any of the services in a manner satisfactory to SEMCOG, SEMCOG may terminate this Agreement. Written notice of termination will be sent to GRANT RECIPIENT. GRANT RECIPIENT will be reimbursed as follows:

GRANT RECIPIENT will be reimbursed for all costs incurred for work accomplished based upon the grant award narrative and budget up to receipt of the notice of termination. SEMCOG may pay a proportional share for a partially completed work product. The value of such partially completed work product will be determined by SEMCOG based on actual cost incurred up to the estimated value of the work product received by SEMCOG, as determined by SEMCOG. Such actual costs will be as set forth in Section 16, but not to exceed the amount set forth in the grant award. SEMCOG will receive the work product produced by GRANT RECIPIENT under this Agreement up to the time of termination, prior to GRANT RECIPIENT being reimbursed. In no case will the compensation paid to GRANT RECIPIENT for partial completion of the services exceed the amount GRANT RECIPIENT would have received had the services been completed.

In the event that termination by SEMCOG is necessitated by any wrongful breach, failure, default, or omission by GRANT RECIPIENT, SEMCOG will be entitled to pursue whatever remedy is available to it, including, but not limited to, withholding funds or off-setting against funds owed to GRANT RECIPIENT under this Agreement, as well as any other existing or future contracts or agreements between GRANT RECIPIENT and SEMCOG, for any and all damages and costs incurred or sustained by SEMCOG as a result of its termination of this Agreement due to the wrongful breach, failure, default, or omission by the GRANT RECIPIENT. In the event of termination of this Agreement, SEMCOG may procure the professional services from other sources and hold GRANT RECIPIENT responsible for any damages or excess costs occasioned thereby.

25. ASSIGNMENT OF ANTITRUST RIGHTS

With regard to claims based on goods or services that were used to meet GRANT RECIPIENT obligation to SEMCOG under this Agreement, GRANT RECIPIENT hereby irrevocably assigns its right to pursue any claims for relief or causes of action for damages sustained by the State of Michigan or MDOT and SEMCOG due to any violation of 15 USC, Sections 1 - 15, and/or 1984 PA 274, MCL 445.771 - .788, excluding Section 4a, to the State of Michigan.

GRANT RECIPIENT shall require any GRANT RECIPIENTS to irrevocably assign their rights to pursue any claims for relief or causes of action for damages sustained by the State of Michigan MDOT and SEMCOG with regard to claims based on goods or services that were used to meet the GRANT RECIPIENT obligation to SEMCOG under this Agreement due to any violation of 15 USC, Sections 1 - 15, and/or 1984 PA 274, MCL 445.771 - .788, excluding Section 4a, to the State of Michigan as a third-party beneficiary.

GRANT RECIPIENT shall notify MDOT and SEMCOG if it becomes aware that an antitrust violation with regard to claims based on goods or services that were used to meet the GRANT RECIPIENT obligation to MDOT and SEMCOG under this Agreement may have occurred or is threatened to occur. GRANT RECIPIENT shall also notify MDOT and SEMCOG if it becomes aware of any person's intent

to commence, or of commencement of, an antitrust action with regard to claims based on goods or services that were used to meet GRANT RECIPIENT obligation to SEMCOG under this Agreement.

26. TERM OF AGREEMENT

Upon award, this Agreement will be in effect from 07/01/22 through 06/30/23 for an amount not to exceed $40,000 as budgeted in the 2022-2023 Unified Work Program. Reimbursements will be based on actual costs.

Pass-Through Grant Recipient Information:

	Total Funds	Federal Funds	Local Match
FHWA PL 112 Funds CFDA #20.205	$40,000	$32,740	$7,260

Federal Award: July 1, 2022
Federal Award Identification Number (FAIN):
SEMCOG Grant: Consolidated Planning Grant (CPG23)
SEMCOG Project: Local & Public Capacity Billing (23314)

This agreement hereby certifies and guarantees that the local match of **$7,260** for the Transportation Equity and Sustainable Infrastructure Grant award of **$40,000** from the SEMCOG Planning Assistance Program, which is funded in the 2022-2023 Unified Work Program for Southeast Michigan, has been properly appropriated and provided by **CITY OF LIVONIA**.

The funds herein provided shall be utilized for transportation planning activities carried out by the hereinafter-named authority in accordance with the 2022-2023 Unified Work Program. These are not R&D funds.

27. NARRATIVE AND BUDGET

Grant Recipient: **City of Livonia**

Project Name: **Transportation Needs Assessment**

Narrative

Under this project, the City of Livonia will develop a transportation needs assessment to better understand the transportation inequities of residents and visitors. To better address these needs the City of Livonia is seeking funds to conduct a community needs assessment that will take a comprehensive look at what these vulnerable population's transportation needs truly are. Only then will we be able to make informed decisions to improve transit operations in Livonia.

Budget

Administrative costs	$1,500
Marketing	$8,000
Materials	$1,500
Public Engagement Consultant	$29,000
TOTAL	**$40,000**

28. AWARD

The Agreement will become binding on the parties and of full force and effect upon signing by the duly authorized representatives of GRANT RECIPIENT and SEMCOG and upon adoption of a resolution approving said Agreement and authorizing the signature(s) thereto of the respective representative(s) of GRANT RECIPIENT, a certified copy of which resolution will be sent to SEMCOG with this Agreement, as applicable.

IN WITNESS WHEREOF, the parties have caused this Agreement to be awarded.

SOUTHEAST MICHIGAN COUNCIL OF GOVERNMENTS

By: _____
Executive Director

CITY OF LIVONIA

By: _____
Title: _____

_____
Entity Identifier (DUNS#)

APPENDIX A
PROHIBITION OF DISCRIMINATION IN STATE CONTRACTS

The Michigan Department of Transportation has a responsibility to ensure that contractors comply with federal contracting requirements, including equal opportunity requirements, and to assist in and cooperate with Federal Highway Administration (FHWA) programs to ensure that equal opportunity is afforded to all. In connection with the performance of work under this contract, the contractor, for itself, its assignees, and its successors in interest (hereinafter referred to as the "contractor"), agrees as follows:

1. In accordance with Public Act 453 of 1976 (Elliott-Larsen Civil Rights Act), the contractor shall not discriminate against an employee or applicant for employment with respect to hire, tenure, treatment, terms, conditions, or privileges of employment or a matter directly or indirectly related to employment because of race, color, religion, national origin, age, sex, height, weight, or marital status. A breach of this covenant will be regarded as a material breach of this contract.

   In accordance with Public act 220 of 1976 (Persons with Disabilities Civil Rights Act), as amended by Public Act 478 of 1980, the contractor shall not discriminate against any employee or applicant for employment with respect to tenure, terms, conditions, or privileges of employment or a matter directly or indirectly related to employment because of a disability that is unrelated to the individual's ability to perform the duties of a particular job or position. A breach of the above covenants will be regarded as a material breach of this contract.

   Furthermore, on any federally-assisted contract, the contractor and GRANT RECIPIENT shall comply with the equal employment opportunity provisions of 23 CFR Subpart D—Construction Contract Equal Employment Opportunity Compliance Procedures, 49 CFR Part 21--Non-Discrimination in Federally-Assisted Programs of the Department of Transportation --Effectuation of Title VI of the Civil Rights Act of 1964, Executive Order 11246, Title VII of the Civil Rights Act of 1964 (Title VII), Public Act 220 of 1976, and Public Act 453 of 1976.

2. The contractor will take affirmative action to ensure that applicants for employment and employees are treated without regard to their race, color, religion, national origin, sex, height, weight, marital status, or any disability that is unrelated to the individual's ability to perform the duties of a particular job or position. Such action shall include, but not be limited to, the following: employments; treatment; upgrading; demotion or transfer; recruitment; advertising; layoff or termination; rates of pay or other forms of compensation; and selection for training, including apprenticeship.

3. The contractor shall, in all solicitations or advertisements for employees placed by or on behalf of the contractor, state that all qualified applicants will receive consideration for employment without regard to race, color, religion, national origin, age, sex, height, weight, marital status, or disability that is unrelated to the individual's ability to perform the duties of a particular job or position.
4. The contractor or its collective bargaining representative shall send to each labor union or representative of workers with which the contractor has a collective bargaining agreement or other contract or understanding a notice advising such labor union or workers' representative of the contractor's commitments under this Appendix.

5. The contractor shall comply with all relevant published rules, regulations, directives, and orders of the Michigan Civil Rights Commission that may be in effect prior to the taking of bids for any individual state project.

6. The contractor shall furnish and file compliance reports within such time and upon such forms as provided by the Michigan Civil Rights Commission; said forms may also elicit information as to the practices, policies, program, and employment statistics of each GRANT RECIPIENT, as well as the contractor itself, and said contractor shall permit access to the contractor's books, records, and accounts by the Michigan Civil Rights Commission and/or its agent for the purposes of investigation to ascertain compliance under this contract and relevant rules, regulations, and orders of the Michigan Civil Rights Commission.

7. In the event that the Michigan Civil Rights Commission finds, after a hearing held pursuant to its rules, that a contractor has not complied with the contractual obligations under this contract, the Michigan Civil Rights Commission may, as a part of its order based upon such findings, certify said findings to the State Administrative Board of the State of Michigan, which State Administrative Board may order the cancellation of the contract found to have been violated and/or declare the contractor ineligible for future contracts with the state and its political and civil subdivisions, departments, and officers, including the governing boards of institutions of higher education, until the contractor complies with said order of the Michigan Civil Rights Commission. Notice of said declaration of future ineligibility may be given to any or all of the persons with whom the contractor is declared ineligible to contract as a contracting party in future contracts. In any case before the Michigan Civil Rights Commission in which cancellation of an existing contract is a possibility, the contracting agency shall be notified of such possible remedy and shall be given the option by the Michigan Civil Rights Commission to participate in such proceedings.

8. The contractor agrees to cooperate with the Department's Project Manager or designee and the Department's Equal Employment Opportunity Officer to resolve any complaints brought against the contractor or any GRANT RECIPIENT on any federally assisted project or program by an employee, applicant for employment, or employee of the Department, regardless of whether or not the employee is employed by the contractor, GRANT RECIPIENT, or the Department, or is an applicant for employment, alleging prohibited discrimination. Prohibited discrimination includes, but is not limited to, sexual harassment, racial discrimination, and other protected categories set forth under Title VII and Public Act 453 of 1976.

9. The contractor shall comply with 23 CFR Subpart D and Executive Order 11246, and as such, the contractor or GRANT RECIPIENT shall conduct a prompt, thorough, and fair investigation of all complaints brought forward under Title VII and Public Act 453 of 1976, in cooperation with the Department's Equal Employment Opportunity Officer.

10. The contractor shall provide a written report detailing the findings of the investigation to the Department's Project Manager and Equal Employment Opportunity Officer when the complaint made against the contractor is by a Department employee or by an applicant for employment. The Department's Equal Employment Opportunity Officer shall review the report for compliance with 23 CFR Subpart D. It is the Department's intent to correct any current acts and prevent any future acts of discrimination arising out of a Title VII or Public Act 453 of 1976 complaint. Title VI complaints will be addressed through the Contractor Compliance Section in the Department's Office of Business Development.

11. The contractor shall include or incorporate by reference the provisions of all applicable covenants set forth in Sections 1 through 10 above in all subcontracts and purchase orders unless exempted by rules, regulations, or orders of the Michigan Civil Rights Commission; all subcontracts and purchase orders will also state that said provisions will be binding upon each GRANT RECIPIENT or supplier.

Application:

1. On any federally assisted contract, the contractor and GRANT RECIPIENT agree to comply with the equal employment opportunity provisions of 23 CFR Subpart D, 49 CFR Part 21, Executive Order 11246, Title VII, Public Act 220 of 1976, and Public Act 453 of 1976.

2. FHWA responsibilities under 23 CFR Part 230.405: The FHWA has the responsibility to ensure that contractors meet contractual equal opportunity requirements under Title 23 USC and to provide guidance and direction to states in the development and implementation of a program to ensure compliance with equal employment opportunity requirements.

3. FHWA Order 4710.8 clarifies that the Office of Federal Contract Compliance Programs of the Department of Labor has exclusive authority to determine compliance with Executive Order 11246 and its implementing regulations.

4. Failure of the Department to discharge the responsibilities set forth in 23 CFR Part 230.405(b)(1) may result in the U.S. Department of Transportation taking any or all of the following actions (see 23 CFR Part 630, Subpart C, Appendix A):

   i) canceling, terminating, or suspending the federal aid project agreement in whole or in part;

   ii) refraining from extending any further assistance to the Department for the program under which the failure or refusal occurred until satisfactory assurance of compliance is received from the Department; and

   iii) referring the case to the appropriate federal agency for legal proceedings.

APPENDIX B
TITLE VI ASSURANCE

During the performance of this contact, the contractor, for itself, its assignees, and its successors in interest (hereinafter referred to as the "contractor"), agrees as follows.

1. **Compliance with Regulations**: For all federally assisted programs, the contractor shall comply with the nondiscrimination regulations set forth in 49CFR Part 21, as may be amended from time to time (hereinafter referred to as the Regulations). Such Regulations are incorporated herein by reference and made a part of this contract.

   Furthermore, on any federally assisted contract, the contractor and GRANT RECIPIENT shall comply with the equal employment opportunity provisions of 23 CFR Subpart D--Construction Contract Equal Employment Opportunity Compliance Procedures, 49 CFR Part 21--Non-Discrimination in Federally-Assisted Programs of the Department of Transportation--Effectuation of Title VI of the Civil Rights Act of 1964, Executive Order 11246, Title VII of the Civil Rights Act of 1964, Public Act 220 of 1976 (Persons with Disabilities Civil Rights Act), and Public Act 453 of 1976 (Elliott-Larsen Civil Rights Act).

2. **Nondiscrimination**: The contractor, with regard to the work performed under the contract, shall not discriminate on the grounds of race, color, sex, or national origin in the selection, retention, and treatment of GRANT RECIPIENTS, including procurements of materials and leases of equipment. The contractor shall not participate either directly or indirectly in the discrimination prohibited by Section 21.5 of the Regulations, including employment practices, when the contractor covers a program set forth in Appendix B of the Regulations.

3. **Solicitation for Subcontracts, Including Procurements of Materials and Equipment**: All solicitations made by the contractor, either by competitive bidding or by negotiation for subcontract work, including procurement of materials or leases of equipment, must include a notification to each potential GRANT RECIPIENT or supplier of the contractor's obligations under the contract and the Regulations relative to nondiscrimination on the grounds of race, color, or national origin.

4. **Information and Reports**: The contractor shall provide all information and reports required by the Regulations or directives issued pursuant thereto and shall permit access to its books, records, accounts, other sources of information, and facilities as may be determined to be pertinent by the Department of Federal Highway Administration in order to ascertain compliance with such Regulations or directives. If required information concerning the contractor is in the exclusive possession of another who fails or refuses to furnish the required information, the contractor shall certify to the Department or the Federal Highway Administration, as appropriate, and shall set forth the efforts that it made to obtain the information.

5. **Sanctions for Noncompliance**: In the event of the contractor's noncompliance with the nondiscrimination provisions of this contract, the Department shall impose such contract sanctions as it or the Federal Highway Administration may determine to be appropriate, including, but not limited to, the following:

   a. Withholding payments to the contractor until the contractor complies; and/or

   b. Canceling, terminating, or suspending the contract, in whole or in part.

6. **Incorporation of Provisions**: The contractor shall include the provisions of Sections (1) through (6) in every subcontract, including procurement of material and leases of equipment, unless exempt by the Regulations or directives issued pursuant thereto. The contractor shall take such action with respect to any subcontract or procurement as the Department or the Federal Highway Administration may direct as a means of enforcing such provisions, including sanctions for non-compliance, provided, however, that in the event a contractor becomes involved in or is threatened with litigation from a GRANT RECIPIENT or supplier as a result of such direction, the contractor may request the Department to enter into such litigation to protect the interests of the state. In addition, the contractor may request the United States to enter into such litigation to protect the interests of the United States.

Revised March 2010

(Revised October 1, 2005)

APPENDIX C
Assurances that Recipients and Contractors Must Make
(Excerpts from US DOT Regulation 49 CFR § 26.13)

A. Each financial assistance agreement signed with a DOT operating administration (or a primary recipient) must include the following assurance:

   The recipient shall not discriminate on the basis of race, color, national origin, or sex in the award and performance of any US DOT-assisted contract or in the administration of its DBE program or the requirements of 49 CFR Part 26. The recipient shall take all necessary and reasonable steps under 49 CFR Part 26 to ensure nondiscrimination in the award and administration of US DOT-assisted contracts. The recipient's DBE program, as required by 49 CFR Part 26 and as approved by US DOT, is incorporated by reference in this agreement. Implementation of this program is a legal obligation and failure to carry out its terms shall be treated as a violation of this agreement. Upon notification to the recipient of its failure to carry out its approved program, the department may impose sanctions as provided for under Part 26 and may, in appropriate cases, refer the matter for enforcement under 18 U.S.C. 1001 and/or the Program Fraud Civil Remedies Act of 1986 (31 U.S.C. 3801 et seq.).

B. Each contract MDOT signs with a contractor (and each subcontract the prime contractor signs with a GRANT RECIPIENT) must include the following assurance:

   The contractor, subrecipient or GRANT RECIPIENT shall not discriminate on the basis of race, color, national origin, or sex in the performance of this contract. The contractor shall carry out applicable requirements of 49 CFR Part 26 in the award and administration of US DOT-assisted contracts. Failure by the contractor to carry out these requirements is a material breach of this contract, which may result in the termination of this contract or such other remedy as the recipient deems appropriate.

Michigan Department
Of Transportation
0165 (07/10)

Appendix D

Prime Consultant Statement of DBE Sub-Consultant Payments

Information required in accordance with 49 CFR §26.37 to monitor progress of the prime consultant in meeting contractual obligations to DBEs.

PRIME CONSULTANT	☐ CHECK IF PRIME IS MDOT-DBE CERTIFIED	AUTHORIZATION NO.	CONTRACT NO.
BILLING PERIOD:	Check if Final Payment ☐	JOB NO.	

CERTIFIED DBE SUBCONSULTANT	SERVICES WORK PERFORMED	TOTAL CONTRACT AMOUNT	CUMULATIVE DOLLAR VALUE OF SERVICES COMPLETED	DEDUCTIONS	ACTUAL AMOUNT PAID TO DATE	ACTUAL AMOUNT PAID DURING THIS REPORTING PERIOD	DBE AUTHORIZED SIGNATURE (Final Payment Report Only)	DATE

As the authorized representative of the above prime consultant, I state that, to the best of my knowledge, this information is true and accurate

PRIME CONSULTANTS AUTHORIZED REPRESENTATIVE (signature)	TITLE	DATEMDO

COMMENTS:
SPECIAL NOTE: "Prime Consultant or Authorized Representative" refers to recipients of federal funds as defined at 49 Code of Federal Regulations Part 26

INSTRUCTIONS

PRIME CONSULTANT OR AUTHORIZED REPRESENTATIVE:

This statement reports the actual dollar amounts of the project cost earned by and paid to DBE subconsultants. Complete and submit to the Payment Analyst with each billing and within 20 days of receipt of final payment. Some forms may be blank if no payment was made since the previous billing.

For “Contract No., Authorization No.,” and “Job No.” as appropriate, use the numbers assigned by MDOT.

For “Period Covered,” report the calendar days covered by the billing.

For “Services Work Performed” report the main service performed by the subconsultant during the reporting period.

For “Total Contract Amount” report the total amount of the contract between the prime consultant and the subconsultant.

For “Cumulative Dollar Value of Services Completed” report the total amount the subconsultant has earned since beginning this project.

For “Deductions,” report deductions made by the prime consultant to the subconsultant’s “Cumulative Dollar Value of Services Completed” for retainage, bond or other fees, materials, services or equipment provided to the subconsultant according to mutual, prior agreement (documentation of such agreement may be required by MDOT).

For “Actual Amount Paid to Date,” report cumulative actual payments made to the subconsultant for services completed.

For “Actual Amount Paid During this Report Period” report actual payments made to the GRANT RECIPIENT for services during this reporting period.

“Provide “DBE Authorized Signature” for final payment only.

Be sure to sign, title and date this statement.

MDOT PAYMENT ANALYST:

Complete “Comments” if necessary, sign date and forward to the Office of Business Development within seven (7) days of receipt.

MDOT Office of Business Development
PO Box 30050
Lansing, Michigan 48909
Questions about this form? Call Toll-free 1-866-DBE-1264

ATTACHMENT A
(This is a reproduction of Appendix A of 49 CFR Part 29)
Certification Regarding Debarment, Suspension, and Other Responsibility Matters – Primary Covered Transactions

Instructions for Certification

1. By signing and submitting this proposal, the prospective primary participant is providing the certification set out below.

2. The inability of a person to provide the certification required below will not necessarily result in denial of participation in this covered transaction. The prospective participant shall submit an explanation of why it cannot provide the certification set out below. The certification or explanation will be considered in connection with the department or agency's determination whether to enter into this transaction. However, failure of the prospective primary participant to furnish a certification or an explanation shall disqualify such person from participation in this transaction.

3. The certification in this clause is a material representation of fact upon which reliance was placed when the department or agency determined to enter into this transaction. If it is later determined that the prospective primary participant knowingly rendered an erroneous certification, in addition to other remedies available to the Federal Government, the department or agency may terminate this transaction for cause or default.

4. The prospective primary participant shall provide immediate written notice to the department or agency to which this proposal is submitted if at any time the prospective primary participant leans that its certification was erroneous when submitted or has become erroneous by reason of changed circumstances.

5. The terms covered transaction, debarred, suspended, ineligible, lower tier covered transaction, participant, person, primary covered transaction, principal, proposal, and voluntarily excluded, as used in this clause, have the meanings set out in the Definitions and Coverage sections of the rules implementing Executive Order 12549. You may contact the department or agency to which this proposal is being submitted for assistance in obtaining a copy of those regulations.

6. The prospective primary participant agrees by submitting this proposal that, should the proposed covered transaction be entered into, it shall not knowingly enter into any lower tier covered transaction with a person who is proposed for debarment under 48 CFR part 9, subpart 9.4, debarred, suspended, declared ineligible, or voluntarily excluded from participation in this covered transaction, unless authorized by the department or agency entering into this transaction.

7. The prospective primary participant further agrees by submitting this proposal that it will include the clause titled "Certification Regarding Debarment, Suspension, Ineligibility and Voluntary Exclusion Lower Tier Covered Transaction," provided by the department or agency entering into this covered transaction, without modification, in all lower tier covered transactions and in all solicitations for lower tier covered transactions.

8. A participant in a covered transaction may rely upon a certification of a prospective participant in a lower tier covered transaction that it is not proposed for debarment under 48 CFR part 9, subpart 9.4, debarred, suspended, ineligible, or voluntarily excluded from the covered transaction, unless it knows that the certification is erroneous. A participant may decide the method and frequency by which it determines the eligibility of its principals. Each participant may, but is not

required to, check the List of Parties Excluded from Federal Procurement and Nonprocurement Programs.

9. Nothing contained in the foregoing shall be construed to require establishment of a system of records in order to render in good faith the certification required by this clause. The knowledge and information of a participant is not required to exceed that which is normally possessed by a prudent person in the ordinary course of business dealings.

10. Except for transactions authorized under paragraph 6 of these instructions, if a participant in a covered transaction knowingly enters into a lower tier covered transaction with a person who is proposed for debarment under 48 CFR part 9, subpart 9.4, suspended, debarred, ineligible, or voluntarily excluded from participation in this transaction, in addition to other remedies available to the Federal Government, the department or agency may terminate this transaction for cause or default.

Certification Regarding Debarment, Suspension, and Other Responsibility Matters – Primary Covered Transactions

1. The prospective primary participant certifies to the best of its knowledge and belief, that it and its principals:
    a. Are not presently debarred, suspended, proposed for debarment, declared ineligible, or voluntarily excluded by any Federal department or agency;

    b. Have not within a three-year period preceding this proposal been convicted of or had a civil judgment rendered against them for commission of fraud or a criminal offense in connection with obtaining, attempting to obtain, or performing a public (Federal, State or local) transaction or contract under a public transaction: violation of

    c. federal or State antitrust statutes or commission of embezzlement, theft, forgery, bribery, falsification or destruction of records, making false statements, or receiving stolen property;

    d. Are not presently indicted for or otherwise criminally or civilly charged by a governmental entity (Federal, State or local) with commission of any of the offenses enumerated in paragraph (1)(b) of this certification; and

    e. Have not within a three year period preceding this application/proposal had one or more public transactions (Federal, State or local) terminated for cause or default

2. Where the prospective primary participant is unable to certify to any of the statements in this certification, such prospective participant shall attach an explanation to this proposal.

[60 FR 33042, 33064, June 26, 1995]

ATTACHMENT B

[This is a reproduction of Appendix B of 49 CFR Part 29]
CERTIFICATION REGARDING DEBARMENT, SUSPENSION, INELIGIBILITY, AND VOLUNTARY EXCLUSION--LOWER TIER COVERED TRANSACTIONS

Instructions for Certification

1. By signing and submitting this proposal, the prospective lower tier participant is providing the certification set out below.

2. The certification in this clause is a material representation of fact upon which reliance was placed when this transaction was entered into. If it is later determined that the prospective lower tier participant knowingly rendered an erroneous certification, in addition to other remedies available to the Federal Government, the department or agency with which this transaction originated may pursue available remedies, including suspension and/or debarment.

3. The prospective lower tier participant shall provide immediate written notice to the person to which this proposal is submitted if at any time the prospective lower tier participant learns that its certification was erroneous when submitted or has become erroneous by reason of changed circumstances.

4. The terms "covered transaction", "debarred", "suspended", "ineligible", "lower tier covered transaction", "participant", "person", "primary covered transaction", "principal", "proposal", and "voluntarily excluded", as used in this clause, have the meanings set out in the Definitions and Coverage sections of rules implementing Executive Order 12549. You may contact the person to which this proposal is submitted for assistance in obtaining a copy of those regulations.

5. The prospective lower tier participant agrees by submitting this proposal that, should the proposed covered transaction be entered into, it shall not knowingly enter into any lower tier covered transaction with a person who is debarred, suspended, declared ineligible, or voluntarily excluded from participation in this covered transaction, unless authorized by the department or agency with which this transaction originated.

6. The prospective lower tier participant further agrees by submitting this proposal that it will include this clause titled "Certification Regarding Debarment, Suspension, Ineligibility, and Voluntary Exclusion--Lower Tier Covered Transaction", without modification, in all lower tier covered transactions and in all solicitations for lower tier covered transactions.

7. A participant is a covered transaction may rely upon a certification of a prospective participant in a lower tier covered transaction that it is not debarred, suspended, ineligible, or voluntarily excluded from the covered transaction, unless it knows that the certification is erroneous. A participant may decide the method and frequency by which it determines the eligibility of its principals. Each participant may, but is not required to, check the Nonprocurement List (Telephone No. (517) 335-2513 or (517) 335-2514.

8. Nothing contained in the foregoing shall be construed to require establishment of a system of records in order to render in good faith the certification required by this clause. The knowledge and information of a participant is not required to exceed that which is normally possessed by a prudent person in the ordinary course of business dealings.

9. Except for transactions authorized under paragraph 5 of these instructions, if a participant in a covered transaction knowingly enters into a lower tier covered transaction with a person who is suspended, debarred, ineligible, or voluntarily excluded from participation in this transaction, in addition to other remedies available to the Federal Government, the department, or agency with which this transaction originated may pursue available remedies, including suspension and/or debarment.

Certification Regarding Debarment, Suspension, Ineligibility, and Voluntary Exclusion—Lower Tier Covered Transactions

1. The prospective lower tier participant certifies, by submission of this proposal, that neither it nor its principals is presently debarred, suspended, proposed for debarment, declared ineligible, or voluntarily excluded from participation in this transaction by any Federal department or agency.

2. Where the prospective lower tier participant is unable to certify to any of the statements in this certification, such prospective participant shall attach an explanation to this proposal.

[Federal Register Doc. 88-11561 Filed 5-25-88; 8:45 a.m.] March 9, 1989

Planning Assistance Program Award Notice: City of Livonia

Mayor Miller Brosnan,

Congratulations! SEMCOG's Regional Review Committee has approved your Planning Assistance Program funding for FY2023:

City of Livonia — City Community Transportation/Transit Needs Assessment

Grant Award: $40,000

Federal Funding: $32,740

Local Match: $7,260

SEMCOG staff will be contacting you in the coming weeks with additional information, including grant agreement, reimbursement process, reporting, etc.

If you have any questions regarding the award, please contact Kevin Vettraino at (313) 324-3357 or vettraino@semcog.org.

Thank you and congratulations.

Amy O'Leary
Executive Director

Meeting was called to order at 8:06 p.m. by Council Vice President Jim Jolly. Present: Vice President Laura Toy, Scott Bahr, Rob Donovic, Scott Morgan, Brandon McCullough. Absent: Kathleen McIntyre

Elected and appointed officials present: Maureen Miller Brosnan, Mayor, Susan Nash, City Clerk, Paul Bernier, City Attorney, Todd Zilincik, City Engineer, LaShawn Thomas, Director of Governmental Affairs, Thomas Goralski Police Chief, Brandie Isaacson, Housing Director, Ted Davis, Superintendent of Parks and Recreation, Jacob Rushlow, Assistant Superintendent of Public Works.

Councilmember Scott Bahr led the Pledge of Allegiance.

6. REQUEST FOR AUTHORIZATION TO PURCHASE ONE (1) 2022 FORD CRUSADER CHALLENGER 12+2 PASSENGER BUS THROUGH THE STATE OF MICHIGAN BID PROCESS: Livonia Housing Commission, re: for use by Livonia Community Transit, from budgeted funds.

   Brandie Isaacson, Housing Director, presented the request to Council.

   Councilmember Brandon McCullough offered an approving motion for the Consent agenda.

   DIRECTION: APPROVAL CONSENT

LETTER TO THE LIVONIA CITY COUNCIL

6.

Housing
September 15, 2022

MEETING DATE	PREPARED BY
S092622/R100522	Brandie Isaacson, Director of Housing,

AGENDA ITEM

REQUEST FOR AUTHORIZATION TO PURCHASE ONE (1) 2022 FORD CRUSADER CHALLENGER 12+2 PASSENGER BUS THROUGH THE STATE OF MICHIGAN BID PROCESS: Livonia Housing Commission, re: for use by Livonia Community Transit, from budgeted funds.

BACKGROUND

The Livonia Community Transit (LCT) Program would like to request approval to purchase one (1) 2022 Ford Crusader Challenger 12+2 Passenger Bus through the State of Michigan bid process utilizing budgeted funds. The total cost of the vehicle package is $129,115.00. This is a complete vehicle package, including both the wheelbase and the passenger bus. Delays in the automotive industry have resulted in a backlog of vehicle replacements. Suburban Ford notified the Transportation Department of the immediate availability of this vehicle. It meets our specifications, has already been built, and is ready for delivery. The new bus will replace #540 2016 Ford E-450 Champion Bus. This bus will be used to support senior transportation programs.

RECOMMENDATION

We ask the Council to approve the purchase of the 2022 Crusader Challenger 12+2 Passenger Bus for the total cost of $129,115.00.

FISCAL CONSIDERATION

Sufficient funds are budgeted in account no. 288-608-985-000

ATTACHMENTS

1. 2022 Challenger 12+2WC shuttle bus quote

APPROVED BY

Brandie Isaacson, Director of Housing — Date: September 15, 2022

Michael Slater, Finance Director — Date: September 16, 2022

Maureen Miller Brosnan

Date: September 16, 2022

Maureen Miller Brosnan, Mayor

CHAMPION

V22-1-1A

2022 CRUSADER - CHALLENGER

TO ADD FACTORY PDI TO THIS ORDER ENTER YES HERE: Hoekstra to do PDI

Date: 8-29-2022

ORDER#: 108751HU-E

FR SHORT VIN: C3J003046

DAX SO #: SB0002698

Dealer Code Number:
Dealer Name: HOEKSTRA
Address: 3741 Roger B. Chaffee Blvd
City/State/ZIP Code: Grand Rapids, MI. 49548
Dealer Contact: STEVE BOLIN
Phone: 800-444-4104
Dealer Contact Email: SBolin@HoekstraInc.com
Sales Rep: Todd Hooper
Champion Print #:

Shipping Method: FOB: City of Livonia
Shipping Location: Livonia
Address:
City/State/ZIP Code:
Phone:
Contact:
Payment Method:
Order Quantity: 1 Dealer P.O. Number:
End User Name: HOEKSTRA STOCK 12+2
Chassis Releasing Dealer: SUBURBAN FORD
FIN CODE if applicable:

If Alternate Fuel Conversion, Enter Fuel Type Here:

CHASSIS INFORMATION FOR ORDER

CHASSIS V.I.N. **KEY CODE:** **CHASSIS YEAR:** 2023

FOR AIRPORTER ORDERS ENTER DUAL DOOR HERE:

Special Order Chassis Options:	
Drop Ship Chassis Details Needed: Shipping Dealer, VIN, Options	

SEAT COLOR & EXTERIOR GRAPHIC INFORMATION REQUIRED

Passenger Seat Fabric: #114 D-90 GRAY VINYL
Driver Seat Fabric: # 018 CADET GRAY
Co Pilot Seat Fabric: NA

CUSTOM GRAPHICS: ENTER THE GRAPHICS AND VENDOR INFORMATION IN THE BOX BELOW:

NONE

MODEL INFORMATION

*Model 25 with 190" wheelbase required for 25 passenger unit. Limited Options and Requires Engineering Approval

ORDER#: **108751HU-E**

	Qty
Challenger - FORD E450 **CONVERSION ONLY PRICING**	
Challenger 22 158" WB E-450 7.3L Premium Gas Engine W/240 AMP OEM ALT	1
SPECIAL INSTRUCTIONS OR NOTES	
SPECIAL BUILD OPTIONS	

ELECTRICAL SYSTEM	
Intermotive Flex Tech Electrical System	1
SIDEWALL / REARWALL / CEILING	
Driver Area: Grey Padded Vinyl	1
FRP on Ceiling, Grey	1
FRP on Rear wall & Side Walls, Grey	1
Cove Flooring on Sidewall to Seat Track	1
FLOORING - WHITE NOSING IS STANDARD	
Aisle: Gerflor Sirius NT #6801 Graphite (Black)	1
Under Seats: Gerflor Sirius NT #6801 Graphite (Black)	1
5/8" MarineTech Plywood Floor	1
ALL FIBERGLASS/COMPOSITE EXTERIOR	1
CHASSIS	
Heavy Duty Anti-Slip Aluminum Running Board on Driver Side (Large)	1
Rear Tow Hooks	1
Exterior Mirror Set, Remote/Heated, Ford	1
ADD STAINLESS STEEL ARMS TO ROSCO MIRRORS	1
Romeo Rim Rear Bumper	1
Stainless Steel Entry Step Assembly - Includes Sides & Header	1
ENVIRONMENTAL CONTROL	
TRANS/AIR AIR CONDITIONING SYSTEMS	1
TA73R60EV SUPER 75K - TA73 EVAP - R60 RM COND - COMPRESSOR	1
TA73R60 SUPER 75K - TA73EVAP - R60 ROOF MOUNT CONDENSER - (1)	1

ORDER#: 108751HU-E

(1) 4013804 Bracket, ! mount compressor	1
(4) 616453/618092 Compressor mount hardware	1
****Ford E-Series chassis currently have standard 55 gallon fuel tank**	1
HEATERS	1
Hot Water Heater, 65K BTU Floor Mounted 3 Speed Low Profile OK Side Sliders	1
MISCELLANEOUS	1
Insulate Heater Hoses	1
Defroster Fan - Mount Location: STD LOCATION DRIVER AREA	1
ELECTRICAL	
Switch Panel Located on Engine Cover	1
Window Ajar Alarm Buzzer on all Egress Windows & Light in Driver Area	1
Circuit Breakers in lieu of Fuses	1
Wiring Diagram "AS BUILT" ON USB Flash Drive	1
EXTERIOR LIGHTS	
Surface Mount LED Entry Door Exterior Light - STD Choose Optional Below or Special builds	1
LED Rear Center Mount Brake Light, **Rectangular**	1
AUDIO / VISUAL	1
Deluxe AM/FM/CD With Clock & 4 Speakers **PA Ready**	1
DOORS / HATCH / WINDOWS	
Electric Entry Door is Standard. Add Option #2056 if Manual is Desired	
Passenger Door Electric (standard)	1
Passenger Door 36" ROUGH OPENING (STANDARD)	1
Roof Hatch - Transpec 9245-0200 White Pro Lo Hatch W/Outside Handle	1
LUGGAGE RACK / STORAGE	1
Driver Storage in Cab Overhead with Lock	1
PARATRANSIT OPTIONS	1
2" Wider ***Double*** W/ C Doors w/ Windows, LED Interior Lights, Leaf Spring, LED Exterior Lighting	1
Required for Lifts Wider than 34" N/A 138-139" WB Front Lifts, Primetime 158"WB 22'. Requires Raised Floor on Universal 158"WB 22'	1
IS THE LIFT IN THE FRONT OR REAR OF THE UNIT? FRONT	1
BRAUN LIFTS	1
Braun Millenium NL9173751 800# (37"X51") N/A 138"WB - Requires 2" Wider Doors. NOT AVAILABLE on 138" or 139" Front Lift Models	1
LIFT FAST IDLE WITH 403 INTERLOCK	1
Intermotive Gateway 508-F Ford E Fast Idle with Lift Interlock	1
Q Straint W.C. Securement Kits, Accessories	1
Q-8301-SC Max Retrctr tie down,Q8-6326-A1 Comb Lap/Shldr,SldNClk	2
Q Straint Belt Storage Pouch	2
Q-Straint Belt Cutter (ship loose)	1
W/C # 1 BEHIND DRIVER TO BE 33" X 54" CENTER TO CENTER PER ATTACHED DRAWING	1
W/C # 2 NEXT TO LIFT TO BE 30" X 48" CENTER TO CENTER PER ATTACHED DRAWING	1
Miscellaneous Accessories	1
Priority Seating Sign **Required for ADA Compliance**	1
Wheelchair Decal (International Symbol of Accessibility) Each	1
SAFETY OPTIONS	
5 Lb Fire Extinguisher	1
16 Unit First Aid Kit	1
Emergency Triangle Kit	1
Back-Up Alarm SAE Type C 97 db(A)	1
STANDARD ROSCO STSK4750 BACK-UP CAMERA SYSTEM W/ 7" REARVIEW MONITOR / MIRROR COMBO	1
Yellow "Standee" Line	1
Decal Vehicle Height Sticker	1
GRAB RAIL / STANCHION / PANELS	
Left Hand Entry Vertical Grab Rail - 1 1/4"	1
Right Hand Entry Vertical Grab Rail - 1 1/4"	1
Yellow Powder Coat Entry Grab Rails Each - Enter Total Quantity Needed	2
Stanchion and Modesty Panel at Entry Door	1

ORDER#: 108751HU-E

Stanchion and Modesty Panel Behind Driver		1
Modesty Panel at Wheelchair Lift (extend from floor to ceiling)		1
Add Tinted Plexiglass Upper Panel	LOCATION: DRIVER	1
RIGHT AND LEFT VERTICAL ENTRY STANCHIONS		1
SEATING - DRIVER		1
SHIELD Recliner(GM&Ford), RH Arm, 4 Position Lumbar, Mesh Pocket		1
FREEDMAN SHIELD DRIVER SEAT FABRICS		1
Driver Seat Cover - Level 4 Ice Pinstripe; Mor-Care; Leathermate		1
SEATING - PASSENGER		1
STD RIGID SEATS		1
Mid High Double Seat		3
FLIP SEATS		1
Flip Seat, Double Freedman Featherweight Mid High		1
FOLDAWAY SEATS		1
Foldaway Seat, Double AM Benchback		2
PASSENGER SEAT FABRICS		1
Seat Cover - Level 4 Ice Pinstripe; Mor-Care; Leathermate		12
SEAT OPTIONS		1
Anti-Vandal Grab Handle, Black Ea on:	ALL EXCEPT LAST ROW or aisle facing	8
Black US Armrest - Each - on:	Aisle Facing Seat	2
Flame Block Material on Underside of Seat (each)		12
SEAT BELTS		1
Seat Belt, Freedman USR Retractable (Per Person)		12
MISCELLANEOUS		

PRICE	$	$ 135,515.00
REBATES	$	$ -6400.00
TOTAL		$ 129,115.00

Price includes chassis, body, shipping and all current OEM incentives/rebates. Tax (if applicable), title, plate, doc fee not included.

AUTHORIZED DEALER SIGNATURE

DATE

AUTHORIZED CHAMPION SIGNATURE

DATE

THANK YOU FOR YOUR ORDER!

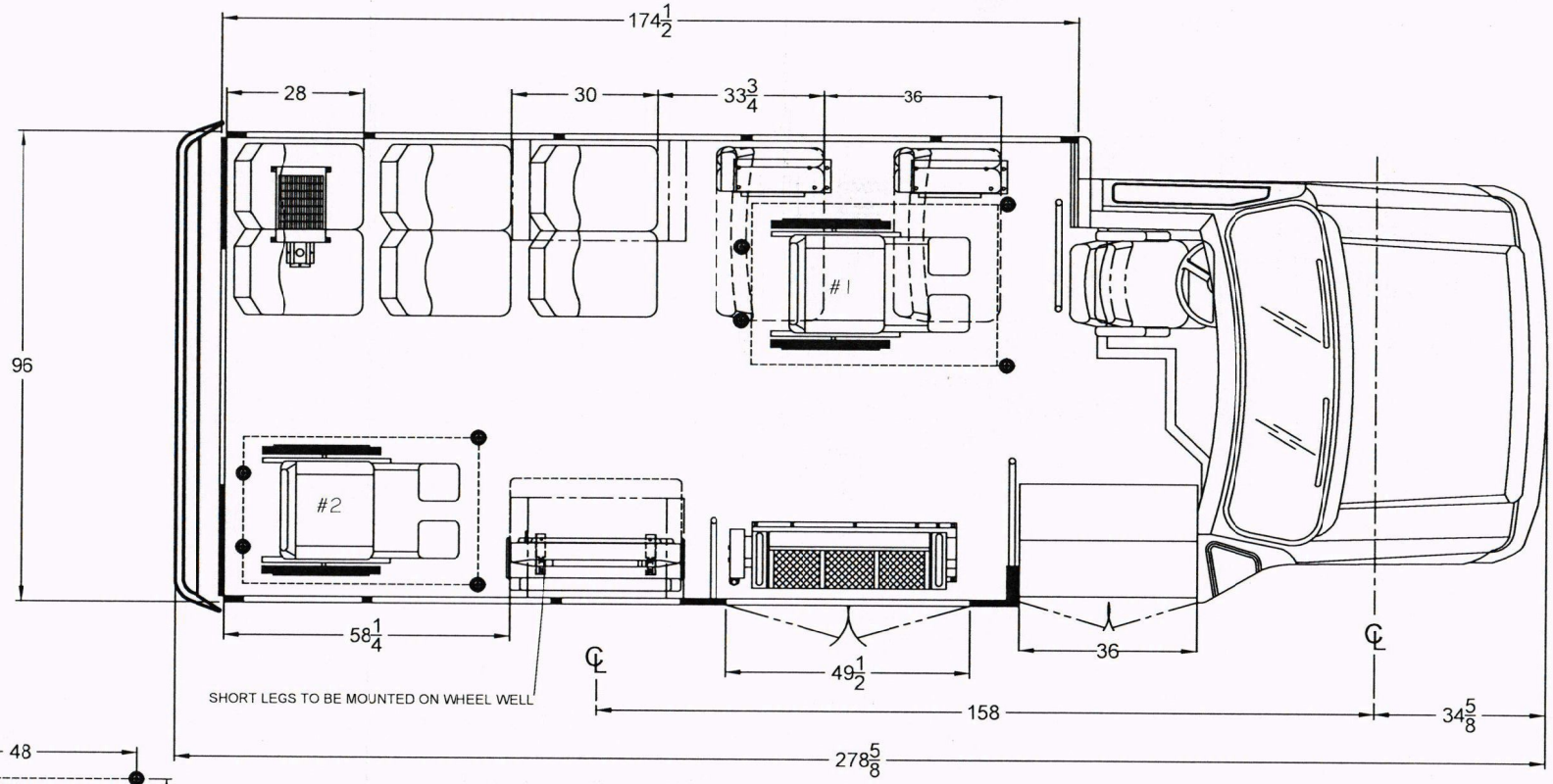

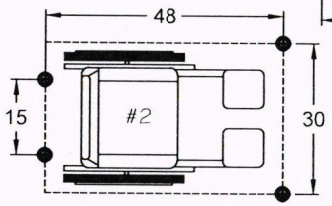

SLIDE-N-CLICK

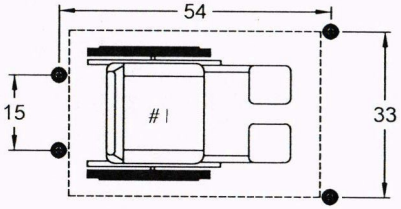

SLIDE-N-CLICK

108751HU-E

NOTE: SHOWN WITH MID HI FREEDMAN SEATS
E-450 14,500 GVWR
THIS FLOOR PLAN IS FOR ILLUSTRATION PURPOSES ONLY.
A WEIGHT ANALYSIS HAS NOT YET BEEN PERFORMED.
FINAL APPROVAL WITH A WEIGHT ANALYSIS IS REQUIRED UPON RECEIPT OF A COMPLETED ORDER WITH ALL OPTIONS SHOWN.
OPTIONAL EQUIPMENT MAY BE SHOWN.
THE SALES ORDER PLACED DICTATES ACTUAL OPTION CONTENT.

DEALER APPROVAL

☐ APPROVED

CUSTOMER SIGNATURE

SCALE IN INCHES

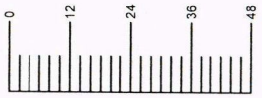

THIS DRAWING AND THE INFORMATION THEREON ARE THE EXCLUSIVE PROPERTY OF FOREST RIVER BUS, A DIVISION OF FOREST RIVER. IT SHALL NOT BE COPIED OR DUPLICATED IN ANY MANNER, NOR SHALL IT BE SUBMITTED TO OUTSIDE PARTIES FOR EXAMINATION WITHOUT OUR WRITTEN CONCENT. IT IS LOANED FOR USE WITH REFERENCE TO WORK UNDER CONTRACT WITH, OR PROPOSALS SUBMITTED TO FOREST RIVER BUS, A DIVISION OF FOREST RIVER.

REV. LET.	DESCRIPTION OF CHANGE	BY	CHK	DATE	ECN No.

TOLERANCE UNLESS OTHERWISE SPECIFIED

WOOD	OTHER
± 1/8"	± 1/16"
± 1°	± 1/2"

FOREST RIVER BUS

TITLE: 6 PASS. 2 WC 158 WB 163 BDY MODEL 22

NAME: CMR DATE: 02/16/22

DWG. No. 6 2 WC 2 DB FOLDS 1 DB FLIP 158 163 FRB

Meeting was called to order at 8:06 p.m. by Council Vice President Jim Jolly. Present: Vice President Laura Toy, Scott Bahr, Rob Donovic, Scott Morgan, Brandon McCullough. Absent: Kathleen McIntyre

Elected and appointed officials present: Maureen Miller Brosnan, Mayor, Susan Nash, City Clerk, Paul Bernier, City Attorney, Todd Zilincik, City Engineer, LaShawn Thomas, Director of Governmental Affairs, Thomas Goralski Police Chief, Brandie Isaacson, Housing Director, Ted Davis, Superintendent of Parks and Recreation, Jacob Rushlow, Assistant Superintendent of Public Works.

Councilmember Scott Bahr led the Pledge of Allegiance.

7. REQUEST FOR AUTHORIZATION TO PURCHASE ONE (1) 2023 FORD F150 REGULAR CAB 4X2 8' BED UTILIZING THE STATE OF MICHIGAN BID PRICING: Department of Parks and Recreation, re: to replace outdated vehicle, from budgeted funds.

   Ted Davis, Superintendent of Parks and Recreation, presented the request to Council.

   Councilmember Scott Morgan asked why someone would buy a 4X2 truck. Ted Davis replied that it was because of price and the vehicle is for hauling materials between locations.

   Councilmember Brandon McCullough offered an approving motion for the Consent agenda.

   DIRECTION: APPROVAL CONSENT

August 2, 2022

City of Livonia DPW
Attn: Gary Garrison
12973 Farmington Road
Livonia, MI 48150

Dear Gary Garrison:

Price on 2023 Vehicle State of Michigan Contract# 071B7700180 and Macomb County Contract# 21-18 Bid:

2023 Ford F150 Regular Cab 4x2 Pickup 8' Box in White $29,953.00 ea

*** Rec Center Truck**

Standard Service Contract: 36,000 miles or 36 months factory Bumper to Bumper Warranty and 60,000miles 60 months Powertrain Warranty . Service to be handled by your local Ford Dealer.

Order Cutoff Date: August 12th, 2022.

Ford Motor Company does not guarantee delivery---Ford Motor Company will make reasonable efforts to schedule orders received prior to fleet order cut-off date.M

Payment requirements: All departments to pay on delivery of vehicle. 10-day grace period will be given if previous arrangements have been made. A $9.50 per day floor plan will be charged if payment is not at the dealership within 10 days of delivery of the vehicle (s).

If you have any questions please call me, 888-92-FLEET (923-5338)

Respectfully Submitted,

Bill Campbell

Bill Campbell
Government & Fleet Sales

1960 E Main St Owosso, MI 48867, 888-92-FLEET (888.923.5338) Fax 517-625-5832

2023 F-150
Reg. Cab, Super Cab XL
Major Standard Equipment

MECHANICAL
• 3.3L V6 PFDI with Auto Start-Stop Technology and Flex-Fuel Capability (standard 4x2/4x4; NA with 157" or 163.7" WB)
• 2.7L V6 EcoBoost® with Auto Start-Stop Technology (standard 4x2 with 157" or 163.7" WB)
• 5.0L V8 with Auto Start-Stop Technology and Flex-Fuel Capability (standard 4x4 with 157" or 163.7" WB)
• 4x4 Electronic-Shift-On-the-Fly with Neutral Towing Capability
• Auto Hold
• Axle, Front – Independent Front Suspension (IFS)
• Brakes – 4-Wheel Disc with ABS
• Selectable Drive Modes: Normal, ECO, Sport, Tow/Haul, Slippery, Trail – 4x2 only
• Selectable Drive Modes: Normal, ECO, Sport, Tow/Haul, Slippery, Deep Snow/Sand, Mud/Rut – 4x4 only
• Electronic Ten-Speed Automatic Transmission
• Fail-Safe Cooling
• Jack
• Electric Parking Brake
• SelectShift® Automatic Transmission with Progressive Range Select
• Shock Absorbers, Gas – Heavy-Duty, Front
• Shock Absorbers, Gas – Heavy-Duty, Outboard Mounted, Rear
• Springs, Front – Coil
• Springs, Rear – Leaf, Two-Stage Variable Rate
• Stabilizer Bar, Front
• Steering – Power, Rack-and-Pinion

EXTERIOR
• 170 Degree Rear-Door (SuperCab)
• Bumper and Fascia, Front – Black
• Bumper, Rear – Black
• Cargo Lamp – integrated with Center High-mounted Stop Lamp
• Daytime Running Lamps (DRL) (On/Off Cluster Controllable)
• Easy Fuel® Capless Fuel-Filler
• Exhaust – Single Rear
• Fuel Tank
— Standard Range 23 Gallon (Regular Cab and SuperCab)
• Fully Boxed Steel Frame
• Grille – Black two-bar style with black surround and black accents
• Handles, Black – Door and Tailgate with Black Bezel
• Hooks – Pickup Box Tie-Down, four (4)
• Hooks – Front Tow 4x4, two (2)
• Mirrors, Sideview – Manual-folding, Power Glass with Heat and Black Skull Caps
• Power Tailgate Lock
• Spare Tire Carrier – Rear Under Frame
• Spare Tire/Wheel Lock
• Stone Cuffs, Front & Rear
• Tailgate Lift Assist
• Tailgate – removable with key lock
• Tires
— 245/70R 17 BSW all-season tires (A/S) 4x2
— 265/70R 17 BSW all-terrain tires (A/T) 4x4
• Trailer Sway Control
• Trailer Towing – 4-pin wiring, ball mounting provisions in rear bumper
• Wheels – 17" silver steel
• Wipers – Intermittent speed

INTERIOR/COMFORT
• 4" Productivity Screen in Instrument Cluster
• Center-stack
— 8" Screen
— Audio Controls
— USB charging ports – two (2)
— USB data charging ports – two (2)
• Air Conditioning Registers – Black Vanes with Chrome Knob
• Auxiliary Audio Input Jack
• Black Vinyl Floor Covering
• Compass Display in Instrument Cluster
• Cruise Control
• Dome Light
• Fade-to-Off Interior Lighting
• Gauges and Meters – Fuel, Oil Pressure, Transmission Temperature and Engine Coolant Temperature Gauges; Speedometer, Odometer and Tachometer
• Grab Handles
— Front – A-Pillar, Driver and Passenger Side
• Horn – Dual-Note
• Illuminated Entry
• Manual Air Conditioning, Single Zone
• Outside Temperature Display
• Powerpoint 12V
• Power Door-Locks with Flip Key and Integrated Key Transmitter Keyless-Entry (incl. Autolock)
• Power Windows (Front/Rear) – One-touch Up/Down Driver and Passenger Front Windows (Rear Power Windows not available on Regular Cab)
• Rear-window with Fixed Glass and Solar Tint
• Rearview Mirror, Day/Night
• Scuff Plate, Driver and Front-Passenger Doors
• Seat, Front
— Cloth 40/20/40
— 2-Way manual driver/passenger
— Armrest
• Seat, Rear
— Cloth
— USB charging ports – two (2)
— 60/40 flip-up split seat (SuperCab)
• Steering Wheel, Black Urethane – Manual Tilt/Telescoping and Manual Locking
• Visor, Driver Side; Visor with Mirror, Passenger-Side

SAFETY/SECURITY
• AdvanceTrac® w/RSC® (Roll Stability Control™)
• Airbags
— Driver and Passenger Front Airbags
— Driver and Passenger Seat-Mounted Side Airbags
— Safety Canopy® Side-Curtain Airbags (1st and 2nd row coverage)
• Curve Control
• Halogen Headlamps – Black Bezels
• MyKey®
• Perimeter Alarm
• Rainlamp Wiper Activated Headlamps
• Seat Belts, Active Restraint System (ARS). Three-point Manual Lap/Shoulder Belts with Height Adjusters, Pretensioners & Energy Mgmt Retractors on Outside Front Positions. Includes Autolock Features for Child Seats
• SecuriLock® Passive Anti-Theft System (PATS)
• SOS Post-Crash Alert System™
• Tire Pressure Monitoring System (TPMS)

FORD CO-PILOT360™ TECHNOLOGY
• Autolamp – Auto On/Off Headlamps
• Auto High Beams
• Lane-Keeping System
• Post-Collision Braking
• Pre-Collision Assist with Automatic Emergency Braking (Pedestrian Detection, Forward Collision Warning, Dynamic Brake Support)
• Rear View Camera with Dynamic Hitch Assist
• Reverse Sensing System

FUNCTIONAL
• AM/FM Stereo (speakers; (4) with Regular Cab, (6) with SuperCab)
• FordPass™ Connect (4G)
— 4G LTE Wi-Fi hotspot connects up to 10 devices
— Schedule specific times to remotely start vehicle
— Locate parked vehicle
— Check vehicle status
• Hill Start Assist
• SYNC® 4
— 8" LCD Capacitive Touchscreen with Swipe Capability — Wireless Phone Connection
— Cloud Connected
— AppLink® w/App Catalog
— 911 Assist®
— Apple CarPlay® and Android Auto™ Compatibility
— Digital Owner's Manual

XL 101A Regular Cab 8 Ft. Box 141" WB

[X]	**Base Price F1C 4x2** (3.3L PFDI V6 engine 6170 GVWR 1960 PAYLOAD) 99B/44G **(T.1)**	**$29,753.00**
[ ]	**Base Price F1C 4x2** (2.7L V6 EcoBoost™ engine 6220 GVWR 1920 PAYLOAD) 99P/44G	**$30,862.00**
[ ]	**Base Price F1C 4x2** (5.0L 4V FFV V8 engine 6750 GVWR 2390 PAYLOAD) 995/44G **(T.2)**	**$31,767.00**
[ ]	**Base Price F1C 4x2** (3.5L V6 EcoBoost™ engine 7050 GVWR 26400 PAYLOAD) 998/44G	**$32,156.00**
[ ]	**Base Price F1E 4x4** (3.3 PFDI V6 engine 6390 GVWR 1920 PAYLOAD) 99B/44G	**$34,348.00**
[ ]	**Base Price F1E 4x4** (2.7lL V6 EcoBoost™ engine 6500 GVWR 1920 PAYLOAD) 99P/44G	**$35,415.00**
[ ]	**Base Price F1E 4x4** (5.0L 4V FFV V8 engine 6950 GVWR 2320 PAYLOAD) 995/44G **(T.3)**	**$36,318.00**
[ ]	**Base Price F1E 4x4** (3.5L V6 EcoBoost™ engine 7050 GVWR 2370 PAYLOAD) 998/44G	**$36,663.00**

XL 101A Super Cab 6.5 Ft. Box 145" WB

[ ]	**Base Price X1C, 4x2** (3.3L PFDI V6 engine 6300 GVWR 1840 PAYLOAD) 99B/44G	**$33,665.00**
[ ]	**Base Price X1C, 4x2** (2.7L V6 EcoBoost™ engine 6400 GVWR 1840 PAYLOAD) 99P/44G	**$34,774.00**
[ ]	**Base Price X1C, 4x2** (5.0L 4V FFV V8 engine 6900 GVWR 2320 PAYLOAD) 995/44G	**$35,688.00**
[ ]	**Base Price X1C, 4x2** (3.5L V6 EcoBoost™ engine 6900 GVWR 2260 PAYLOAD) 998/44G	**$36,208.00**
[ ]	**Base Price X1E, 4x4** (3.3L PFDI V6 engine 6500 GVWR 1770 PAYLOAD) 99B/44G	**$37,191.00**
[ ]	**Base Price X1E, 4x4** (2.7L V6 EcoBoost™ engine 6500 GVWR 1640 PAYLOAD) 99P/44G	**$38,586.00**
[ ]	**Base Price X1E, 4x4** (5.0L 4V FFV V8 engine 7050 GVWR 2200 PAYLOAD) 995/44G	**$39,297.00**
[ ]	**Base Price X1E, 4x4** (3.5L V6 EcoBoost™ engine 7050 GVWR 2150 PAYLOAD) 998/44G	**$39,472.00**

XL 101A Super Cab 8 Ft. Box 163" WB

[ ]	**Base Price X1C, 4x2** (2.7L V6 EcoBoost™ engine 6500 GVWR 1910 PAYLOAD) 99P/44G	**$34,982.00**
[ ]	**Base Price X1C, 4x2** (5.0L 4V FFV V8 engine 7000 GVWR 2330 PAYLOAD) 995/44G	**$35,933.00**
[ ]	**Base Price X1C, 4x2** (3.5L V6 EcoBoost™ engine 7050 GVWR 2290 PAYLOAD) 998/44G	**$36,345.00**
[ ]	**Base Price X1E, 4x4** (5.0L 4V FFV V8 engine 7000 GVWR 2020 PAYLOAD) 995/44G	**$39,847.00**
[ ]	**Base Price X1E, 4x4** (3.5L V6 EcoBoost™ engine 7050 GVWR 2050 PAYLOAD) 998/44G	**$40,358.00**

XL 101A Heavy Duty Payload Package (627) 8 Ft. Box

Package Includes: 18" Silver Painted Aluminum Heavy Duty Wheels, Upgraded springs, 9.75" gear set, 3.73 Electronic Locking Rear Axle, Trailer Towing package, and LT265/70R18C OWL All-Terrain Tires

Regular Cab Heavy Duty Payload Package

[ ]	**Base Price F1C, 4x2** (5.0L 4V FFV V8 engine 7850 GVWR 3270 PAYLOAD) 995/44G	**$35,159.00**
[ ]	**Base Price F1C, 4x2** (3.5L V6 EcoBoost™ engine 7850 GVWR 3230 PAYLOAD) 998/44G	**$35,534.00**
[ ]	**Base Price F1E, 4x4** (5.0L 4V FFV V8 engine 7850 GVWR 3150 PAYLOAD) 995/44G	**$39,704.00**
[ ]	**Base Price F1E, 4x4** (3.5L V6 EcoBoost™ engine 7850 GVWR 3040 PAYLOAD) 998/44G	**$40,122.00**

Super Cab Heavy Duty Payload Package

[ ]	**Base Price X1C, 4x2** (5.0L 4V FFV V8 engine 7850 GVWR 3070 PAYLOAD) 995/44G	**$39,385.00**
[ ]	**Base Price X1C, 4x2** (3.5L V6 EcoBoost™/engine 7850 GVWR 2950 PAYLOAD) 998/44G	**$39,697.00**
[ ]	**Base Price X1E, 4x4** (5.0L 4V FFV V8 engine 7850 GVWR 2670 PAYLOAD) 995/44G	**$43,134.00**
[ ]	**Base Price X1E, 4x4** (3.5L V6 EcoBoost™ engine 7850 GVWR 2630 PAYLOAD) 998/44G	**$43,778.00**

Available Options	Option Code	Price
[ ] Cloth 40/20/40 Split Bench Seats	CS	N/C
[ ] Cloth 40/Console/40 Front Bucket Seats w/Center Console **(SuperCab Only)**	WS	295.00
[ ] Onboard 400W Outlet **(Only Available with Trailer Tow Package (53A) and Super Cab)**	471	340.00
[ ] SYNC® 4 with Enhanced Voice Recognition with SiriusXM® with 360L)	524/582	325.00
[ ] 36 Gallon Fuel Tank	655	445.00
[ ] LT265/70R17E BSW All-Terrain (A/T) Tires	T7C	295.00
[ ] Trailer Towing Package with Integrated Trailer Brake Controller	**53A**	**1325.00**
[ ] Mirrors Sideview Manual-folding, Power Glass with Heat, Turn Signal Auto-Dimming Feature (Driver's Side), High-Intensity LED Security Approach Lamps, LED Side-mirror Spotlights, Ford Co-Pilot 360 2.0 and Black Skull Caps	54R/59S/43A	1135.00
[ ] Trailer Tow Mirrors Sideview Manual-folding, Manual Telescoping Power Glass with Heat, Turn Signal Auto-Dimming Feature (Driver's Side), High-Intensity LED Security Approach Lamps, LED Side-mirror Spotlights, Ford Co-Pilot 360 2.0 and Black Skull Caps. **Only Available with Trailer Tow (53A) & Rear Defroster (57Q/924)**	54Y/59S/43A	1790.00
[ ] Axle Locking Rear	XL_	570.00
[ ] Front / Rear Chrome Bumper with Fog Lamps	17C/595	315.00
[ ] CHROME APPEARANCE PACKAGE • 17" Silver Painted Aluminum Wheels, • Chrome Front and Rear Bumpers • Fog Lamps	**86A**	**775.00**
[ ] Skid Plates 4x4 Only	413	160.00
[ ] Snow Plow Prep **(4x4, and Available w/5.0L Engine Only)**	68P	50.00
[ ] Rear Window, Privacy Glass with Defroster	57Q/924	320.00
[ ] Black Platform Running Boards	18B	250.00
[ ] Fog Lamps	595	140.00
[ ] Daytime Running Lights	942	50.00
[ ] Engine Block Heater	41H	90.00
[ ] Back up Alarm System	85H	145.00
[ ] Front License Plate Holder	153	N/C
[ ] Color-Coordinated Carpet w/Carpeted Floor Mats	168	145.00
[ ] Spray in Bedliner	96W	595.00
[ ] Bed Liner – Plastic, Drop-in (NA w/ Cable Lock – 47S)	96P	350.00
[ ] BED UTILITY PACKAGE • Fog Lamps (595) • LED Box Lighting • Zone Lighting • BoxLink™ (Includs four (4) premium locking cleats) • Tailgate Step (includes Tailgate Work Surface)	**68L/595**	**835.00**
[ ] Tonneau Pickup Box Cover – Soft Folding	96T	590.00
[ ] Tonneau Pickup Box Cover – Hard Folding	96X	1200.00
[ ] Tonneau Pickup Box Cover – Retractable	96J	2200.00
[ ] LED Warning Strobes – Amber (Includes Center High-Mounted Stop Light	94S	600.00
[x] (2) Extra Keys Regular PATS	**PTS**	**300.00**

TOTAL $29,953.00 ea

Colors & Trim Availability:

Exterior		Interior (Med. Earth Grey)(AS)
Agate Black	(UM)	[ ]
Oxford White	**(YZ)**	**[X]**
Carbonized Gray	(M7)	[ ]
Race Red	(PQ)	[ ]
Antimatter Blue	(HX)	[ ]
Iconic Silver	(JS)	[ ]
Stone Gray	(D1)	[ ]
Atlas Blue	(B3)	[ ]
SPECIAL PAINT		
School Bus Yellow Add $600.00	**[B1]**	[ ]
Omaha Orange Add $600.00	**[MB]**	[ ]

LETTER TO THE LIVONIA CITY COUNCIL

7.

Parks and Recreation
August 11, 2022

MEETING DATE	PREPARED BY
S092622/R100522	Ann Cox, Program Supervisor,

AGENDA ITEM

REQUEST FOR AUTHORIZATION TO PURCHASE ONE (1) 2023 FORD F150 REGULAR CAB 4X2 8' BED UTILIZING THE STATE OF MICHIGAN BID PRICING: Department of Parks and Recreation, re: to replace outdated vehicle, from budgeted funds.

BACKGROUND

The Department of Parks and Recreation is requesting Council approval for the purchase of a Ford F150 Truck for use by the Parks and Recreation Department. The new vehicle will replace an outdated pool truck that the Department has used for the past several years. That truck will be disposed of through auction.

RECOMMENDATION

We request to purchase one (1) Ford F150 Truck for $29,953 from Signature Ford, 1960 E. Main Street, Owosso, MI 48867. Pursuant to Finance Ordinance 3.04.140 d. 4, we are requesting a waiver of the City's sealed bid process, based on the State of Michigan pricing for vehicles.

FISCAL CONSIDERATION

Sufficient funds are budgeted in capital outlay accounts 208.755.987.000.

ATTACHMENTS

1. 2022 LC REC CENTER 2023 F150

APPROVED BY

Date: August 11, 2022

Ted Davis, CPRP, Superintendent of Parks and Recreation

Michael T Slater

Date: August 15, 2022

Michael Slater, Finance Director

Maureen Miller Brosnan

Date: September 07, 2022

Maureen Miller Brosnan, Mayor

Meeting was called to order at 8:06 p.m. by Council Vice President Jim Jolly. Present: Vice President Laura Toy, Scott Bahr, Rob Donovic, Scott Morgan, Brandon McCullough. Absent: Kathleen McIntyre

Elected and appointed officials present: Maureen Miller Brosnan, Mayor, Susan Nash, City Clerk, Paul Bernier, City Attorney, Todd Zilincik, City Engineer, LaShawn Thomas, Director of Governmental Affairs, Thomas Goralski Police Chief, Brandie Isaacson, Housing Director, Ted Davis, Superintendent of Parks and Recreation, Jacob Rushlow, Assistant Superintendent of Public Works.

Councilmember Scott Bahr led the Pledge of Allegiance.

8. AWARD OF BID: Department of Parks and Recreation, re: for the lease of 11 pieces of equipment in order to maintain the Fox Creek, Whispering Willows and Idyl Wyld golf courses, from budgeted funds.

   Ted Davis, Superintendent of Parks and Recreation, presented the request to Council.

   Councilmember Rob Donovic asked if the maintenance is the responsibility of the leasing company or the Department and if they would be getting rid of the equipment they have. Ted Davis stated the labor would fall on the TJW, the operator of the golf courses and it would depend on the age and usage of the equipment, most would stay in the fleet.

   Councilmember Rob Donovic offered an approving motion for the Consent agenda.

   Bob Guzick, Livonia, asked if the golf courses are for profit, asking why the City would pay for the maintenance of the parks. Ted Davis stated the fees for the golf courses pay for their maintenance.

   DIRECTION: APPROVAL CONSENT

LETTER TO THE LIVONIA CITY COUNCIL

8.

Parks and Recreation
August 5, 2022

MEETING DATE	PREPARED BY
S092622/R100522	Ann Cox, Program Supervisor,

AGENDA ITEM

AWARD OF BID: Department of Parks and Recreation, re: for the lease of 11 pieces of equipment in order to maintain the Fox Creek, Whispering Willows and Idyl Wyld golf courses, from budgeted funds.

BACKGROUND

The Department of Parks and Recreation is requesting your approval to lease 11 pieces of new golf equipment for Fox Creek, Whispering Willows and Idyl Wyld golf courses.

Specifications were prepared by the Parks and Recreation Department, Finance, and TJW staff for 11 pieces of new equipment to be leased over five years, with a $1 buyout at the end of five years. An advertisement for bids was placed on the MITN website. Three companies submitted bids which were opened in the presence of the Bid Committee at 2 p.m. on July 26, 2022.

The bid results are as follows:

Revels Turf and Tractor – $101,734.39/year
- 11 pieces of new equipment
- Trade-In 11 pieces of used equipment
- Three-year warranty on Jacobsen equipment

Spartan Distributors $131,521.44/year
- 11 pieces of new equipment
- Trade-In 11 pieces of used equipment
- Three-year warranty on all equipment

Baker Vehicle Systems $128,916.00/year
- 11 pieces of new equipment
- Trade-In 11 pieces of used equipment
- Three-year warranty on all equipment

Attached for Council's review are bid specifications, and equipment trade-in information. Bids are good for 120 days from bid opening.

RECOMMENDATION

After reviewing the bids, staff is recommending to award the bid and adopt the attached John Deere Financial Golf Leasing Agreement to Revels Turf and Tractor, 7060 Kensington Rd., Brighton, MI 48116, in the amount of $459,333.55 with an annual lease payment of $101,734.39 for five years. Revels meets all of our equipment specifications and has provided the lowest cost. These 11 pieces of equipment will allow TJW to continue to maintain our courses to the high standards we expect.

FISCAL CONSIDERATION

Budgeted funds are available in the following accounts: 409.000.974.103, 409.000.974.101, and 409.000.974 starting in FY 2023.

ATTACHMENTS

1. 2022 Equipment Lease

APPROVED BY

Date: August 05, 2022

Ted Davis, CPRP, Superintendent of Parks and Recreation

Date: August 16, 2022

Michael Slater, Finance Director

Date: September 07, 2022

Maureen Miller Brosnan, Mayor

Prepared for:
CITY OF LAVONIA DBA: FOX CREEK GOLF

Comments:
- Municipal Rate 5.25%

Date: 8/3/2022
Dealer: Revels Turf and Tractor
Salesperson: Rusty Willard
Quote ID: 26883753
Lease Type: Lease Purchase
Term: 60 MONTHS
Number of Payments: 5
Payment Option: ANNUAL
State & Zip: MI, 48154

NEW/USED	YEAR	MAKE	DESCRIPTION	HOURS/YEAR	QTY	UNIT PRICE	AMOUNT LEASED	BASE PAYMENT
New	2022	John Deere	2700 E-Cut Hybrid Triplex Mower	N/A	5	$38,583.00	$192,915.00	$40,202.28
New	2022	John Deere	6500A - PrecisionCut Fairway Mower	N/A	2	$47,181.75	$94,363.50	$19,664.76
New	2022	John Deere	7400A - Trim & Surrounds Mower	N/A	2	$43,996.26	$87,992.52	$18,337.09
New	2022	John Deere	8800A - TerrainCut Rough Mower	N/A	1	$63,970.83	$63,970.83	$13,331.12
New	2022	Smithco	1200 - Sprayer	N/A	1	$48,941.70	$48,941.70	$10,199.14

Totals:	$488,183.55	
Trade-In:	$28,850.00	
Net Total:	**$459,333.55**	**$101,734.39**

Please note:
*Quote is subject to credit approval
*Quote assumes first payment due in advance
*Rates and purchase options are not protected and subject to change
*Payment per asset assumes financing of full package
*Tax has been estimated for quoting purposes

Base Lease Payment:	$101,734.39
Property Tax Exempt:	$0.00
Sales Tax Exempt:	$0.00
Total Estimated Payment:	**$101,734.39**

.Company Use

JOHN DEERE

Purchase Order for John Deere Equipment (U.S. Only)

PO# 08978336
PO Revision# Original

PURCHASER'S NAME - First Signer (First, Middle Initial, Last) **CITY OF LIVONIA FOX CREEK GOLF**	DATE OF ORDER **Jul 27, 2022**	COMPANY UNIT **01**	DEALER ACCOUNT NO. **014836**
(SECOND LINE OF OWNER NAME)	DEALER ORDER NO. **12345678**		
STREET OR RR **33000 CIVIC CENTER DR**	SOC.SEC.	IRS NO.	EIN.NO.
TOWN **LIVONIA** / STATE **MI** / ZIP CODE **48154**	TRANSACTION TYPE **Lease**	PURCHASER SALES TAX EXEMPT	
COUNTY **Wayne** / PURCHASER ACCT. / PHONE NO. **734-476-1164**	SELLER'S NAME & ADDRESS **Deere & Company** **2000 John Deere Run** **Cary, NC 27513** **800-849-5469**		
REWARDS #			
E-MAIL ADDRESS **dware@livonia.gov**			
Use County **WAYNE** / **Use State/Province** **MI**			

I (We), the undersigned, hereby order from Dealer the Equipment described below, to be delivered as shown below. This order is subject to Dealer's ability to obtain such Equipment from the manufacturer and Dealer shall be under no liability if delivery of the Equipment is delayed or prevented due to labor disturbances, transportation difficulties, or for any reason beyond Dealer's control. The price shown below is subject to Dealer's receipt of the Equipment prior to any change in price by the manufacturer. It is also subject to any new or increased taxes imposed upon the sale of the Equipment after the date of this order.

QTY	NEW	DEMO	RENTAL	USED	Equipment & Value Added Service (Give Model, Size & Description)	Hours of Use	PRODUCT IDENTIFICATION NUMBER	DELIVERED CASH PRICE (Or Total Lease Payments)	
1	X				Smithco 1200 Sprayer: 200g, Foam Kit	0		$ 48,941	70
1	X				JOHN DEERE 2700 E-Cut Hybrid Triplex Mower		1234567891234	$ 38,583	00
1	X				JOHN DEERE 2700 E-Cut Hybrid Triplex Mower		1234567891234	$ 38,583	00
1	X				JOHN DEERE 2700 E-Cut Hybrid Triplex Mower		1234567891234	$ 38,583	00
1	X				JOHN DEERE 2700 E-Cut Hybrid Triplex Mower		1234567891234	$ 38,583	00
1	X				JOHN DEERE 2700 E-Cut Hybrid Triplex Mower		1234567891234	$ 38,583	00
1	X				JOHN DEERE 6500A PrecisionCut Fairway Mower (Model 2023)		1234567891234	$ 47,181	75
1					+ PowerGard Protection Plan : New Units - Still within basic warranty, 6500A PRECISIONCUT, Comprehensive - Full Machine, 1800 Total Hours or 36 Total Months, $0 Deductible		2021298508	$ 0	00
1	X				JOHN DEERE 6500A PrecisionCut Fairway Mower (Model 2023)		1234567891234	$ 47,181	75
1					+ PowerGard Protection Plan : New Units - Still within basic warranty, 6500A PRECISIONCUT, Comprehensive - Full Machine, 1800 Total Hours or 36 Total Months, $0 Deductible		2021298532	$ 0	00
1	X				JOHN DEERE 7400A TerrainCut Trim and Surrounds Mower (Model 2023)		1234567891234	$ 43,996	26
1					+ PowerGard Protection Plan : New Units - Still within basic warranty, 7400A, Comprehensive - Full Machine, 1800 Total Hours or 36 Total Months, $0 Deductible		2021298533	$ 0	00
1	X				JOHN DEERE 7400A TerrainCut Trim and Surrounds Mower (Model 2023)		1234567891234	$ 43,996	26
1					+ PowerGard Protection Plan : New Units - Still within basic warranty, 7400A, Comprehensive - Full Machine, 1800 Total Hours or 36 Total Months, $0 Deductible		2021298534	$ 0	00
1	X				JOHN DEERE 8800A TerrainCut Rough Mower (Model 2023)		1234567891234	$ 63,970	83
1					+ PowerGard Protection Plan : New Units - Still within basic warranty, 8800A, Comprehensive - Full Machine, 1800 Total Hours or 36 Total Months, $0 Deductible		2021298535	$ 0	00
							TOTAL CASH PRICE	$ 488,183	55

I (We) offer to sell, transfer, and convey the following item(s) at or prior to the time of delivery of the above Equipment, as a "trade-in" to be applied against the cash price. Such item(s) shall be free and clear of all security agreements, liens, and encumbrances at the time of transfer to you. The following is a description and the price to be allowed for each item.

QTY	DESCRIPTION OF TRADE-IN	Hours of Use	PRODUCT IDENTIFICATION NUMBER	AMOUNT	
1	2005 TORO 3150 Q	4667	04357-250000814	$ 1,900	00
1	2004 TORO 3150 Q	4640	04357-240001001	$ 1,900	00
1	JACOBSEN Greens King IV	2848	622804965	$ 2,500	00
1	2004 TORO 3150 Q	3800	04357-240000972	$ 2,400	00
1	2007 TORO 3500-D	7700	30839-270000849	$ 1,800	00
1	2008 JOHN DEERE 7400		TC7400X010332	$ 3,500	00
1	2017 Other Sand Star Zee	348	ZTR130	$ 2,800	00
1	2005 TORO 3150Q	2965	04375-250000760	$ 3,350	00
1	2005 TORO 3150Q	2812	04375-25000816	$ 3,375	00
1	JACOBSEN Greens King IV	2858	6228804742	$ 2,400	00
1	JACOBSEN Greens King IV	2349	6228804933	$ 2,925	00
			TOTAL TRADE-IN ALLOWANCE	$ 28,850	00

JOHN DEERE

Purchase Order for John Deere Equipment (U.S. Only)

PO# 08978336
PO Revision# Original

Quote ID: 26883753

Purchaser Name: CITY OF LIVONIA FOX CREEK GOLF

PURCHASER TYPE MARKET USE

COMMENTS:
This will be a lease through JDF for 60 months and should have the PO within 30 days.

HOC 2700s @ .125
7400/8800 @ 2.5
6500 @ .500

Doug Ware 734-765-6396

1. TOTAL CASH-PRICE	$ 488,183	55
2. TOTAL TRADE-IN ALLOWANCE	$ 28,850	00
3. TOTAL TRADE-IN PAY-OFF	$ 0	00
4. BALANCE	$ 459,333	55
8. EST. SERVICE AGREEMENT TAXES	$ 0	00
6. SUB-TOTAL	$ 459,333	55
7. CASH WITH ORDER	$ 0	00
8. RENTAL APPLIED	$ 0	00
9. CASH DISCOUNT	$ 0	00
10. BALANCE DUE	$ 459,333	55

IMPORTANT WARRANTY NOTICE: The John Deere warranty applicable to new John Deere Equipment is printed and included with this document. There is no warranty on used equipment. The new equipment warranty is part of this contract. Please read it carefully. **YOUR RIGHTS AND REMEDIES PERTAINING TO THIS PURCHASE ARE LIMITED AS SET FORTH IN THE WARRANTY AND THIS CONTRACT. IMPLIED WARRANTIES OF MERCHANTABILITY AND FITNESS ARE NOT MADE AND ARE EXCLUDED UNLESS SPECIFICALLY PROVIDED IN THE JOHN DEERE WARRANTY.**

Telematics: Orders of telematic devices include only the hardware. Where available, telematics software, including JDLink™ connectivity service, may be enabled from your local John Deere Operations Center or JDLink website. Please see your authorized John Deere dealer for assistance.

DISCLOSURE OF REGULATION APPLICABILITY: When operated in California, any off-road diesel vehicle may be subject to the California Air Resources Board. In-Use Off-Road Diesel Vehicle Regulation. It therefore could be subject to retrofit or accelerated turnover requirements to reduce emissions of air pollutants.

ACKNOWLEDGEMENTS- I (We) promise to pay the Balance Due (line10) shown above in cash, or to execute a Time Sale Agreement (Retail InstallmentContract), or a Loan Agreement, for the purchase price of the Equipment, plus additional charges shown thereon or execute a Lease Agreement, on or before delivery of the Equipment ordered herein. Despite physical delivery of the Equipment,title shall remain in the seller until one of the foregoing is accomplished.

USE OF INFORMATION/PRIVACY NOTICE I understand that Deere & Company and its affiliates ("John Deere") and Dealer collect information, including my personal information and machine data to provide warranty, customer service, product and customer support, marketing and promotional information about Dealer, John Deere and their equipment, products and services and to support other business processes and purposes. See the John Deere Privacy Statement (**https://www.deere.com/en/privacy-and-data/privacy-statements/**) for additional information on the types of personal information and machine data John Deere collects, how it is collected, used and disclosed. See Dealer directly for information about its privacy policy.

Purchaser's Signature _____ Accepted By _____

Purchaser's Signature _____ Date Accepted _____ Salesperson WILLARD,RUSTY

Delivery Acknowledgement

Delivered On: [ ]

Warranty Begins: [ ]

_____
Signature Date

EQUIPMENT

Smithco 1200 Sprayer: 200g, Foam Kit

Shipping Address

CITY OF LIVONIA FOX CREEK GOLF
33000 CIVIC CENTER DR
City: LIVONIA, State: MI, Zip: 48154
Phone: 7344761164, Email: dware@livonia.gov

Code	Description	Quantity
	Options	
1202	Spray Star 1200	1
15-965	Foam marker	1
17-585	18.5ft Boom	1

JOHN DEERE 2700 E-Cut Hybrid Triplex Mower SN # 1234567891234

Shipping Address

CITY OF LIVONIA FOX CREEK GOLF
33000 CIVIC CENTER DR
City: LIVONIA, State: MI, Zip: 48154
Phone: 7344761164, Email: dware@livonia.gov

Code	Description	Quantity
	Options	
1243TC	2700 E-Cut Hybrid Triplex Mower	1
001A	United States and Canada	1
183E	JDLink™ Modem	1
0443	All Other Countries (English / Spanish)	1
1024	Smooth Tires and Wheels (20x10.00-10, 4 ply)	1
1190	Two-Wheel Drive (2WD)	1
1214	Quick Adjust 5 (QA5) 14-blade Cutting Units	1
1302	Hollow Smooth Rollers	1
1400	Cutting Unit ONLY Counterweights	1
1602	50.8 mm (2-in.) Diameter Wide Tube / Hollow Smooth Front Rollers	1
2009	Standard Seat	1
3203	Cutting Unit Attaching Yokes and Translucent Yellow Grass Catchers	1
9766	LED Work Light Kit	1
9849	(3) 55.9 cm (22-in.) Rear Roller Scrapers (Solid) for QA5 Cutting Units with 50.8 mm (2-in.) Smooth Rear Rollers	1

JOHN DEERE 2700 E-Cut Hybrid Triplex Mower SN # 1234567891234

Shipping Address

CITY OF LIVONIA FOX CREEK GOLF
33000 CIVIC CENTER DR
City: LIVONIA, State: MI, Zip: 48154
Phone: 7344761164, Email: dware@livonia.gov

Code	Description	Quantity
	Options	
1243TC	2700 E-Cut Hybrid Triplex Mower	1
001A	United States and Canada	1
183E	JDLink™ Modem	1
0443	All Other Countries (English / Spanish)	1
1024	Smooth Tires and Wheels (20x10.00-10, 4 ply)	1
1190	Two-Wheel Drive (2WD)	1
1214	Quick Adjust 5 (QA5) 14-blade Cutting Units	1
1302	Hollow Smooth Rollers	1
1400	Cutting Unit ONLY Counterweights	1
1602	50.8 mm (2-in.) Diameter Wide Tube / Hollow Smooth Front Rollers	1
2009	Standard Seat	1
3203	Cutting Unit Attaching Yokes and Translucent Yellow Grass Catchers	1
9766	LED Work Light Kit	1
9849	(3) 55.9 cm (22-in.) Rear Roller Scrapers (Solid) for QA5 Cutting Units with 50.8 mm (2-in.) Smooth Rear Rollers	1

JOHN DEERE 2700 E-Cut Hybrid Triplex Mower SN # 1234567891234

Shipping Address

CITY OF LIVONIA FOX CREEK GOLF
33000 CIVIC CENTER DR
City: LIVONIA, State: MI, Zip: 48154
Phone: 7344761164, Email: dware@livonia.gov

Code	Description	Quantity
	Options	
1243TC	2700 E-Cut Hybrid Triplex Mower	1
001A	United States and Canada	1
183E	JDLink™ Modem	1
0443	All Other Countries (English / Spanish)	1
1024	Smooth Tires and Wheels (20x10.00-10, 4 ply)	1
1190	Two-Wheel Drive (2WD)	1
1214	Quick Adjust 5 (QA5) 14-blade Cutting Units	1
1302	Hollow Smooth Rollers	1

1400	Cutting Unit ONLY Counterweights	1
1602	50.8 mm (2-in.) Diameter Wide Tube / Hollow Smooth Front Rollers	1
2009	Standard Seat	1
3203	Cutting Unit Attaching Yokes and Translucent Yellow Grass Catchers	1
9766	LED Work Light Kit	1
9849	(3) 55.9 cm (22-in.) Rear Roller Scrapers (Solid) for QA5 Cutting Units with 50.8 mm (2-in.) Smooth Rear Rollers	1

JOHN DEERE 2700 E-Cut Hybrid Triplex Mower SN # 1234567891234

Shipping Address

CITY OF LIVONIA FOX CREEK GOLF
33000 CIVIC CENTER DR
City: LIVONIA, State: MI, Zip: 48154
Phone: 7344761164, Email: dware@livonia.gov

Code	Description	Quantity
	Options	
1243TC	2700 E-Cut Hybrid Triplex Mower	1
001A	United States and Canada	1
183E	JDLink™ Modem	1
0443	All Other Countries (English / Spanish)	1
1024	Smooth Tires and Wheels (20x10.00-10, 4 ply)	1
1190	Two-Wheel Drive (2WD)	1
1214	Quick Adjust 5 (QA5) 14-blade Cutting Units	1
1302	Hollow Smooth Rollers	1
1400	Cutting Unit ONLY Counterweights	1
1602	50.8 mm (2-in.) Diameter Wide Tube / Hollow Smooth Front Rollers	1
2009	Standard Seat	1
3203	Cutting Unit Attaching Yokes and Translucent Yellow Grass Catchers	1
9766	LED Work Light Kit	1
9849	(3) 55.9 cm (22-in.) Rear Roller Scrapers (Solid) for QA5 Cutting Units with 50.8 mm (2-in.) Smooth Rear Rollers	1

JOHN DEERE 2700 E-Cut Hybrid Triplex Mower SN # 1234567891234

Shipping Address

CITY OF LIVONIA FOX CREEK GOLF
33000 CIVIC CENTER DR
City: LIVONIA, State: MI, Zip: 48154
Phone: 7344761164, Email: dware@livonia.gov

Code	Description	Quantity
	Options	

1243TC	2700 E-Cut Hybrid Triplex Mower	1
001A	United States and Canada	1
183E	JDLink™ Modem	1
0443	All Other Countries (English / Spanish)	1
1024	Smooth Tires and Wheels (20x10.00-10, 4 ply)	1
1190	Two-Wheel Drive (2WD)	1
1214	Quick Adjust 5 (QA5) 14-blade Cutting Units	1
1302	Hollow Smooth Rollers	1
1400	Cutting Unit ONLY Counterweights	1
1602	50.8 mm (2-in.) Diameter Wide Tube / Hollow Smooth Front Rollers	1
2009	Standard Seat	1
3203	Cutting Unit Attaching Yokes and Translucent Yellow Grass Catchers	1
9766	LED Work Light Kit	1
9849	(3) 55.9 cm (22-in.) Rear Roller Scrapers (Solid) for QA5 Cutting Units with 50.8 mm (2-in.) Smooth Rear Rollers	1

JOHN DEERE 6500A PrecisionCut Fairway Mower (Model 2023) SN # 1234567891234

Shipping Address

CITY OF LIVONIA FOX CREEK GOLF
33000 CIVIC CENTER DR
City: LIVONIA, State: MI, Zip: 48154
Phone: 7344761164, Email: dware@livonia.gov

Code	Description	Quantity
	Options	
1577TC	6500A PrecisionCut Fairway Mower	1
001A	United States and Canada	1
183E	JDLink™ Modem	1
0443	All Other countries (English/Spanish)	1
1201	Quick Adjust 5 (QA5) 7-blade Heavy Section Cutting Units	1
1327	63.5 mm (2.5-in.) Diameter Heavy Duty Grooved Disc Rollers	1
1400	QA5 Cutting Unit ONLY Counterweights	1
1602	50.8 mm (2-in.) Diameter Wide Tube / Hollow Smooth Rollers	1
9849	(5) 55.9 cm (22-in.) Rear Roller Scrapers (Solid) for QA5 or QA7 with 50.8 mm (2-in.) Smooth Rear Rollers	1

JOHN DEERE 6500A PrecisionCut Fairway Mower (Model 2023)

Package / Plan Description	Sales Type	Agreed Price	Accept
	TOTAL:	0.00	

Deere Disclaimers :

For Agricultural, Residential or Commercial Use: All products are optional. Finance charges, total of payments, total of payments including down payment, and amount financed will be clearly displayed on your actual contract. John Deere accepts no liability in relation to this arrangement as it is solely between the Customer and the authorized John Deere DEALER.

Dealer Disclaimers :

Quotes do not include applicable tax's unless otherwise stated.

Extended Warranty

PowerGard™ Protection Plan

Golf Products **Accepted**

Date : July 27, 2022

Machine/Use Information		Plan Description		Price	
Manufacturer	JOHN DEERE	Plan Type	New	Deductible	$ 0.00
Equipment Type	Golf Products	Coverage	Comprehensive	Quoted Price	$ 0.00
Model	6500A PRECISIONCUT	Total Months	36	Powergard List Price	$ 3,224.00
Country	US	Total Hours	1800	Date Quoted	July 15, 2022
MFWD/Tracks	N				
Scraper Use					

THIS PROPOSAL IS VALID FOR 30 DAYS FROM DATE ISSUED.

JOHN DEERE 6500A PrecisionCut Fairway Mower (Model 2023) SN # 1234567891234

Shipping Address

CITY OF LIVONIA FOX CREEK GOLF
33000 CIVIC CENTER DR
City: LIVONIA, State: MI, Zip: 48154
Phone: 7344761164, Email: dware@livonia.gov

Code	Description	Quantity
	Options	
1577TC	6500A PrecisionCut Fairway Mower	1
001A	United States and Canada	1
183E	JDLink™ Modem	1
0443	All Other countries (English/Spanish)	1
1201	Quick Adjust 5 (QA5) 7-blade Heavy Section Cutting Units	1
1327	63.5 mm (2.5-in.) Diameter Heavy Duty Grooved Disc Rollers	1
1400	QA5 Cutting Unit ONLY Counterweights	1
1602	50.8 mm (2-in.) Diameter Wide Tube / Hollow Smooth Rollers	1
9849	(5) 55.9 cm (22-in.) Rear Roller Scrapers (Solid) for QA5 or QA7 with 50.8 mm (2-in.) Smooth Rear Rollers	1

JOHN DEERE 6500A PrecisionCut Fairway Mower (Model 2023)

Package / Plan Description	Sales Type	Agreed Price	Accept
	TOTAL:	0.00	

Deere Disclaimers :

For Agricultural, Residential or Commercial Use: All products are optional. Finance charges, total of payments, total of payments including down payment, and amount financed will be clearly displayed on your actual contract. John Deere accepts no liability in relation to this arrangement as it is solely between the Customer and the authorized John Deere DEALER.

Dealer Disclaimers :

Quotes do not include applicable tax's unless otherwise stated.

Extended Warranty

PowerGard™ Protection Plan

Golf Products

Accepted

Date : July 27, 2022

Machine/Use Information		Plan Description		Price	
Manufacturer	JOHN DEERE	Plan Type	New	Deductible	$ 0.00
Equipment Type	Golf Products	Coverage	Comprehensive	Quoted Price	$ 0.00
Model	6500A PRECISIONCUT	Total Months	36	Powergard List Price	$ 3,224.00
Country	US	Total Hours	1800	Date Quoted	July 15, 2022
MFWD/Tracks	N				
Scraper Use					

THIS PROPOSAL IS VALID FOR 30 DAYS FROM DATE ISSUED.

JOHN DEERE 7400A TerrainCut Trim and Surrounds Mower (Model 2023) SN # 1234567891234

Shipping Address

CITY OF LIVONIA FOX CREEK GOLF

33000 CIVIC CENTER DR

City: LIVONIA, State: MI, Zip: 48154

Phone: 7344761164, Email: dware@livonia.gov

Code	Description	Quantity
	Options	
143FTC	7400A TerrainCut Trim and Surrounds Mower	1
001A	United States/Canada	1
183E	JDLink™ Modem	1
0443	All Other Countries (English / Spanish)	1
9766	LED Work Light Kit	1

JOHN DEERE 7400A TerrainCut Trim and Surrounds Mower (Model 2023)

Package / Plan Description	Sales Type	Agreed Price	Accept
	TOTAL:	0.00	

Deere Disclaimers :

For Agricultural, Residential or Commercial Use: All products are optional. Finance charges, total of payments, total of payments including down payment, and amount financed will be clearly displayed on your actual contract. John Deere accepts no liability in relation to this arrangement as it is solely between the Customer and the authorized John Deere DEALER.

Dealer Disclaimers :

Quotes do not include applicable tax's unless otherwise stated.

Quote Id : 26883753 PO # : 08978336 Purchaser Name : CITY OF LIVONIA FOX CREEK GOLF

Extended Warranty

PowerGard™ Protection Plan

Golf Products

Accepted

Date : July 27, 2022

Machine/Use Information		Plan Description		Price	
Manufacturer	JOHN DEERE	Plan Type	New	Deductible	$ 0.00
Equipment Type	Golf Products	Coverage	Comprehensive	Quoted Price	$ 0.00
Model	7400A	Total Months	36	Powergard List Price	$ 3,224.00
Country	US	Total Hours	1800	Date Quoted	July 15, 2022
MFWD/Tracks	N				
Scraper Use					

THIS PROPOSAL IS VALID FOR 30 DAYS FROM DATE ISSUED.

JOHN DEERE 7400A TerrainCut Trim and Surrounds Mower (Model 2023) SN # 1234567891234

Shipping Address

CITY OF LIVONIA FOX CREEK GOLF
33000 CIVIC CENTER DR
City: LIVONIA, State: MI, Zip: 48154
Phone: 7344761164, Email: dware@livonia.gov

Code	Description	Quantity
	Options	
143FTC	7400A TerrainCut Trim and Surrounds Mower	1
001A	United States/Canada	1
183E	JDLink™ Modem	1
0443	All Other Countries (English / Spanish)	1
9766	LED Work Light Kit	1

JOHN DEERE 7400A TerrainCut Trim and Surrounds Mower (Model 2023)

Package / Plan Description	Sales Type	Agreed Price	Accept
	TOTAL:	0.00	

Deere Disclaimers :

For Agricultural, Residential or Commercial Use: All products are optional. Finance charges, total of payments, total of payments including down payment, and amount financed will be clearly displayed on your actual contract. John Deere accepts no liability in relation to this arrangement as it is solely between the Customer and the authorized John Deere DEALER.

Dealer Disclaimers :

Quotes do not include applicable tax's unless otherwise stated.

DC - 1378 (Effective 1 August 2013)

Quote Id : 26883753 PO # : 08978336 Purchaser Name : CITY OF LIVONIA FOX CREEK GOLF

Extended Warranty

PowerGard™ Protection Plan

Golf Products

Accepted

Date : July 27, 2022

Machine/Use Information		Plan Description		Price	
Manufacturer	JOHN DEERE	Plan Type	New	Deductible	$ 0.00
Equipment Type	Golf Products	Coverage	Comprehensive	Quoted Price	$ 0.00
Model	7400A	Total Months	36	Powergard List Price	$ 3,224.00
Country	US	Total Hours	1800	Date Quoted	July 15, 2022
MFWD/Tracks	N				
Scraper Use					

THIS PROPOSAL IS VALID FOR 30 DAYS FROM DATE ISSUED.

JOHN DEERE 8800A TerrainCut Rough Mower (Model 2023) SN # 1234567891234

Shipping Address

CITY OF LIVONIA FOX CREEK GOLF

33000 CIVIC CENTER DR

City: LIVONIA, State: MI, Zip: 48154

Phone: 7344761164, Email: dware@livonia.gov

Code	Description	Quantity
	Options	
150ETC	8800A TerrainCut Rough Mower	1
001A	United States/Canada	1
183E	JDLink™ Modem	1
0443	All Other Countries (English / Spanish)	1

JOHN DEERE 8800A TerrainCut Rough Mower (Model 2023)

Package / Plan Description	Sales Type	Agreed Price	Accept
	TOTAL:	0.00	

Deere Disclaimers :

For Agricultural, Residential or Commercial Use: All products are optional. Finance charges, total of payments, total of payments including down payment, and amount financed will be clearly displayed on your actual contract. John Deere accepts no liability in relation to this arrangement as it is solely between the Customer and the authorized John Deere DEALER.

Dealer Disclaimers :

Quotes do not include applicable tax's unless otherwise stated.

Quote Id : 26883753 PO # : 08978336 Purchaser Name : CITY OF LIVONIA FOX CREEK GOLF

Extended Warranty

PowerGard™ Protection Plan

Golf Products

Accepted

Date : July 27, 2022

Machine/Use Information		**Plan Description**		**Price**	
Manufacturer	JOHN DEERE	Plan Type	New	Deductible	$ 0.00
Equipment Type	Golf Products	Coverage	Comprehensive	Quoted Price	$ 0.00
Model	8800A	Total Months	36	Powergard List Price	$ 3,224.00
Country	US	Total Hours	1800	Date Quoted	July 15, 2022
MFWD/Tracks	N				
Scraper Use					

THIS PROPOSAL IS VALID FOR 30 DAYS FROM DATE ISSUED.

TRADE-INS

2005 TORO 3150 Q SN # 04357-250000814

Code	Description	Quantity
	Options	
		1
	Key Code Details	

Hour Meter Reading 4667

2004 TORO 3150 Q SN # 04357-240001001

Code	Description	Quantity
	Options	
		1
	Key Code Details	

Hour Meter Reading 4640

JACOBSEN Greens King IV SN # 622804965

Code	Description	Quantity
	Options	
		1
	Key Code Details	

Hour Meter Reading 2848

2004 TORO 3150 Q SN # 04357-240000972

Code	Description	Quantity
	Options	
		1
	Key Code Details	

Hour Meter Reading 3800

2007 TORO 3500-D SN # 30839-270000849

Code	Description	Quantity
	Options	
		1
	Key Code Details	

Hour Meter Reading 7700

2008 JOHN DEERE 7400 SN # TC7400X010332

Code	Description	Quantity
	Options	
		1

2017 Other Sand Star Zee SN # ZTR130

Code	Description	Quantity
	Options	
		1
	Key Code Details	
Hour Meter Reading	348	

2005 TORO 3150Q SN # 04375-250000760

Code	Description	Quantity
	Options	
		1
	Key Code Details	
Hour Meter Reading	2965	

2005 TORO 3150Q SN # 04375-25000816

Code	Description	Quantity
	Options	
		1
	Key Code Details	
Hour Meter Reading	2812	

JACOBSEN Greens King IV SN # 6228804742

Code	Description	Quantity
	Options	
		1
	Key Code Details	
Hour Meter Reading	2858	

JACOBSEN Greens King IV SN # 6228804933

Code	Description	Quantity
	Options	

1

Key Code Details

Hour Meter Reading 2349

WARRANTY FOR NEW JOHN DEERE AGRICULTURAL EQUIPMENT AND LIMITED WARRANTY FOR NEW TURF & UTILITY EQUIPMENT (US & CANADA ONLY)

A. GENERAL PROVISIONS – With respect to purchasers in the United States, "John Deere" means Deere & Company, 1 John Deere Place, Moline, IL 61265, and with respect to purchasers in Canada, "John Deere" means John Deere Canada ULC, 295 Hunter Road, P. O. Box 1000, Grimsby, Ontario L3M 4H5. The warranties described below are provided by John Deere to the original purchasers of new Agricultural, Turf and Utility Equipment ("Equipment") purchased from John Deere or authorized John Deere dealers (the "Selling Dealer"). These warranties apply only to Equipment intended for sale in Canada and the US. Under these warranties, John Deere will repair or replace, at its option, any part covered under these warranties which is found to be defective in material or workmanship during the applicable warranty term. Warranty service must be performed by a dealer or service center located in Canada or the US, and authorized by John Deere to sell and/or service the type of Equipment involved (the "Authorized Dealer"). The Authorized Dealer will use only new or remanufactured parts or components furnished or approved by John Deere. Warranty service will be performed without charge to the purchaser for parts and/or labor. However, the purchaser will be responsible for any service call and/or transportation of Equipment to and from the Authorized Dealer's place of business (except where prohibited by law), for any premium charged for overtime labor requested by the purchaser and for any service and/or maintenance not directly related to any defect covered under these warranties. These warranties are transferable, provided an authorized John Deere dealer is notified of the ownership change, and John Deere approves the warranty transfer.

B. WHAT IS WARRANTED – Subject to paragraph C, all parts of any new Equipment are warranted for the number of months or operating hours specified below. Each warranty term begins on the date of delivery of the Equipment to the original purchaser, (except for certain agricultural tillage, planting, cultivating, harvesting, and application Equipment which may have a delayed warranty start date, but only if established by John Deere and noted by Selling Dealer on the Purchase Order). **Included In 5E Series Tractor and Compact Utility Tractor Powertrain Warranty - Engine:** cylinder block, cylinder head, valve covers, oil pan, emissions control components, timing gear covers, flywheel housing, and all parts contained therein. **Powertrain:** transmission, transmission case, differential and axle housings, clutch housings, MFWD front axle assembly, and all parts contained therein (does not include external drivelines, dry clutch parts, or steering cylinders). SWEEPS, SHOVELS, PLOWSHARES, AND DISK BLADES: A replacement part will be furnished without charge if breakage occurs and the amount of wear is less than the wear limits established by John Deere.

AGRICULTURAL EQUIPMENT	WARRANTY TERM
Tractors	24 Months or 2000 Hours, Whichever Comes First
Tractors used in Heavy Duty Land Leveling applications exceeding 150 hours per year	90 Days
9R Series Tractors factory equipped with Option 0574 used in Heavy Duty Land Leveling applications less than half of the annual usage	24 Months or 2000 Hours, Whichever Comes First
9R Series Tractors factory equipped with Option 0574 used in Heavy Duty Land Leveling applications exceeding half of the annual usage	90 Days
Scraper Special Tractors	24 Months or 2000 Hours, Whichever Comes First
5E Series Tractors a) Powertrain on 5E Series Tractors (components as per B above)	24 Months or 2000 Hours, Whichever Comes First a) 60 Months or 2000 Hours, Whichever Comes First
Scrapers	6 Months for MY14 and earlier 12 Months for D Series and MY15 and later
Frontier™ Equipment	12 months
Sugar Cane Harvesters and Loaders	12 months or 1500 hours, Whichever Comes First
All other Equipment (includes Ag Management Solutions (AMS) products)	12 Months
Premium Round Balers 469, 569, 450R, 460R, 560R	24 Months or 12,000 bales, Whichever Comes First; First 12 Months, No Bale Limitation
Large Square Balers a) Powertrain on Large Square Balers	12 Months, No Bale Limitation a) 24 Months or 20,000 bales, Whichever Comes First
Hagie Manufacturing Company LLC Sprayers and Detasselers	24 Months or 1000 Hours, Whichever Comes First
Engines in Self-Propelled Equipment except Tractors*	24 Months or 2000 Hours, Whichever Comes First

*Engine Items Covered in months 13 through 24 – Engine block, cylinder head, rocker arm cover, timing gear cover, crankcase pan and all parts enclosed within these units. Also included are the fuel injection pump, turbocharger, water pump, torsion damper, manifolds, and engine oil cooler. All other engine related items are not covered in months 13 through 24.

TURF & UTILITY EQUIPMENT	WARRANTY TERM
1) Z425 EZtrak™ Mowers, Z300 Series and Z525E ZTrak ™ Mowers, and 100 Series Tractors**	24 Months or 120 Hours, Whichever Comes First
2) 200 Series Tractors**	36 Months or 200 Hours, Whichever Comes First
3) X300 Series Tractors; Z400 Series EZtrak™ Mowers, Z515E and Z500M Series ZTrak™ Mowers (Except Z425 and Z525E)**	48 Months or 300 Hours, Whichever Comes First
4) X500 Series Tractors; Z700E and Z500R Series ZTrak™ Mowers**	48 Months or 500 Hours, Whichever Comes First
5) X700 Series Tractors**	48 Months or 700 Hours, Whichever Comes First
6) Z700M Series ZTrak™ Mowers**	48 Months or 750 Hours, Whichever Comes First
7) Z700R Series ZTrak™ Mowers**	48 Months or 1000 Hours, Whichever Comes First
8) JS Series Residential Walk-Behind Mowers	24 Months in Private Residential – Personal Use or 90 Days in Any Other Application
9) Wide Area Mowers, Front Mower Traction Units and Mower Decks, QuikTrak™ Mowers, Commercial Walk Behind Mowers	24 Months
10) Z900B, Z900E, and Z900M Series ZTrak™ Mowers	36 Months or 1200 Hours, Whichever Comes First; First 24 Months, No Hour Limitation
11) Z997, Z900A Series and Z900R Series ZTrak™ Mowers	36 Months or 1500 Hours, Whichever Comes First; First 24 Months, No Hour Limitation
12) Compact Utility Tractors a) Powertrain on Compact Utility Tractors (components as per B above) b) Compact Utility Tractor Loaders D120, 120R, 220R, 300E, 300R, 320R, 400E, 440R	24 Months or 2000 Hours, Whichever Comes First a) 72 Months or 2000 Hours, Whichever Comes First b) 24 Months
13) GATOR™ Utility Vehicles	12 Months or 1000 Hours, Whichever Comes First
14) Except as provided above, all other Implements/Attachments sold separately or purchased on the same Purchase Order as Equipment listed in 9 through 13	12 Months
15) All other Turf & Utility Equipment	24 Months in Private Residential - Personal Use or 12 Months in Any Other Application

**Implements/Attachments purchased on the same Purchase Order as the Equipment listed will be covered by the Equipment's warranty terms. Implements/Attachments purchased separately will be covered by the warranty term on line 14.

C. (I) ITEMS COVERED SEPARATELY – (1) Tires, rubber tracks and batteries; (2) John Deere Hand Held-Portable products; (3) When applicable, a separate emissions warranty statement will be provided by Selling Dealer.

(II) WHAT IS NOT WARRANTED – Pursuant to the terms of these warranties, JOHN DEERE IS NOT RESPONSIBLE FOR THE FOLLOWING: (1) Used Equipment; (2) Any Equipment that has been altered or modified in ways not approved by John Deere, including, but not limited to, setting injection pump fuel delivery above John Deere specifications, modifying combine grain tanks, and modifying self-propelled sprayers with unapproved wheels, tracks, tanks or booms; (3) Depreciation or damage caused by normal wear, lack of reasonable and proper

maintenance, failure to follow operating instructions/recommendations; misuse, lack of proper protection during storage, vandalism, the elements or collision or accident; (4) Normal maintenance parts and/or service, including but not limited to, oil, filters, coolants and conditioners, cutting parts, belts, brake and clutch linings; (5) Any Utility Vehicle used for racing or other competitive purpose; (6) Chains on Premium Balers.

D. SECURING WARRANTY SERVICE -- To secure warranty service the purchaser must, (1) Report the Equipment defect to an Authorized Dealer and request warranty service within the applicable warranty term; (2) Present evidence of the warranty start date with valid proof of purchase; and (3) Make the Equipment available to an Authorized Dealer within a reasonable time.

E. NO IMPLIED WARRANTY, REPRESENTATION OR CONDITION -- To the extent permitted by law, neither John Deere nor any company affiliated with it makes any warranties, representations, conditions or promises express or implied as to the quality, performance or freedom from defect of the Equipment covered by these warranties other than those set forth above, AND NO STATUTORY OR IMPLIED WARRANTIES OR CONDITIONS OF MERCHANTABILITY OR FITNESS ARE MADE.TO THE EXTENT LEGALLY REQUIRED, ANY IMPLIED WARRANTIES OR CONDITIONS SHALL BE LIMITED IN DURATION TO THE APPLICABLE PERIOD OF WARRANTY SET FORTH ON THIS PAGE. THE PURCHASER'S ONLY REMEDIES IN CONNECTION WITH THE BREACH OR PERFORMANCE OF ANY WARRANTY ON JOHN DEERE EQUIPMENT ARE THOSE SET FORTH ON THIS PAGE. IN NO EVENT WILL THE DEALER, JOHN DEERE OR ANY COMPANY AFFILIATED WITH JOHN DEERE BE LIABLE FOR INCIDENTAL OR CONSEQUENTIAL DAMAGES. (Note: Some jurisdictions do not allow limitations on how long an implied warranty lasts or the exclusion or limitation of incidental or consequential damages so the above limitations and exclusions may not apply to you.) In the event the above warranty fails to correct purchaser's performance problems caused by defects in workmanship and/or materials, purchaser's exclusive remedy shall be limited to payment by John Deere of actual damages in an amount not to exceed the amount paid for the Equipment. This warranty gives you specific legal rights, and you may also have other rights which vary from jurisdiction to jurisdiction.

F. NO DEALER WARRANTY THE DEALER HAS NO AUTHORITY TO MAKE ANY WARRANTY, REPRESENTATION, CONDITION OR PROMISE ON BEHALF OF JOHN DEERE, OR TO MODIFY THE TERMS OR LIMITATIONS OF THIS WARRANTY IN ANY WAY.

G. If further information is desired, contact Selling Dealer or John Deere at 1-866-993-3373 (Agricultural) or 1-800-537-8233 (Turf & Utility Equipment).

CITY OF LIVONIA – REQUEST FOR BID

LEASE/PURCHASE

GOLF COURSE LAWN MAINTENANCE EQUIPMENT

The City of Livonia Michigan will receive sealed bids via the MITN WEBSITE ONLY (www.mitn.info) for **LEASE/PURCHASE OF GOLF COURSE LAWN MAINTENANCE EQUIPMENT** according to the specifications herein. Sealed bids will be received until 2:00 p.m., on JULY 26, 2022. No faxed bids will be accepted. No late bids will be accepted. No physical bids will be accepted. All bid responses must be submitted in Adobe Acrobat PDF format via the MITN website. **BIDS MUST BE SUBMITTED ON CITY OF LIVONIA FORMS.**

Bids received via the MITN website by the specified due date and time will be publicly opened at the due date and time via Zoom. Vendors may attend the bid opening virtually by using the following credentials:

By Computer:

https://us02web.zoom.us/j/82294127641

By Phone:

Phone (312) 626-6799
Webinar ID: 822 9412 7641

The City reserves the right to reject in or in part any and all bids received, to waive any irregularities or informalities or both; as it is determined to be in the best interests of the City of Livonia to do so.

The City of Livonia officially distributes bid documents through the Michigan Intergovernmental Trade Network (BidNet). **Bid documents obtained from any other source are not considered official copies.** The City of Livonia cannot guarantee the accuracy of any information not obtained from the MITN website and is not responsible for any errors contained by any information received from alternate sources. Only those firms who obtain the RFB documents from the MITN system are guaranteed access to receive addendum information, if such information is issued. If you obtained this document from a source other than the source indicated, it is recommended that you register on the MITN site, www.mitn.info and obtain an official copy.

No bidder may withdraw his proposal within ninety (90) days after the date set for the opening thereof. The City reserves the right to reject or accept any or all proposals in whole or in part and waive any irregularities therein.

QUESTIONS:
Questions regarding the Request for Bid must be submitted **in writing** to the attention of Enna A. Bachelor, Purchasing Manager, via email at: ebachelor@livonia.gov. All questions received by JULY 21, 2022. will be responded to in writing in the form of an addendum which will be posted on the MITN website. No phone calls will be accepted. All inquiries regarding this solicitation shall be submitted to the Purchasing Manager.

INSTRUCTIONS TO BIDDERS

FOR

GOLF COURSE LAWN MAINTENANCE EQUIPMENT

1. Sealed bids will be received by the City of Livonia, Michigan, as owner, until 2:00 p.m., local time, on JULY 26, 2022 VIA THE MITN WEBSITE ONLY. Late bids will not be considered. Physical bid submission will not be accepted.

2. Bids shall be for items as specified on attached Proposal Form. Alternates offered may be accepted or reject at the sole discretion of the City. Bidder shall provide manufacturer's specification sheets for all equipment offered.

3. If any figure already entered on the proposal form by the bidder is to be altered, it shall be crossed out with ink and the new unit price entered above it or below it and initialed by the bidder.

4. The unit price shall be entered where indicated.

5. The bid of any City-based firm may be deemed a better bid than the bid of any competing firm which is not City-based, whenever the bid of such competing firm shall be less than three percent lower than the bid of the City-based firm on any contract in an amount of $100,000 or less, and less than one percent lower on any amount bid in excess thereof. The firm making the lowest bid thus evaluated shall be deemed the lowest bidder. (Section 3.04.140.E. of the Livonia Code of Ordinances, as amended).

6. It is understood that the quantities of materials to be furnished as stated in the proposal are approximate and are given only as a basis for comparing bids.

7. Department shall confirm delivery locations for all equipment with the successful bidder.

8. All invoices shall be submitted to the City of Livonia on the basis of the unit prices bid within the contract period specified.

FORM OF PROPOSAL

BID PROPOSAL FOR GOLF COURSE LAWN MAINTENANCE EQUIPMENT:

Honorable Members of the Council
33000 Civic Center Drive
Livonia, Michigan 48150

Dear Council Members:

The undersigned, as a bidder, declares that he has familiarized himself with the type of material desired and has carefully examined the specifications and instructions to bidders, which he understands and accepts as sufficient for the purpose and agrees he will furnish to the City of Livonia the specified items and will accept in full payment therefore the following amounts:

THE LOW BIDDER WILL BE DETERMINED BY THE TOTAL PRICE FOR ALL MATERIAL LISTED.

In submitting this sealed bid, it is understood that the City of Livonia reserves the right to reject or accept any or all proposals in whole or in part and waive any irregularities or formalities therein. It is agreed that this bid may not be withdrawn for ninety (90) days from the opening thereof.

The contractor and his subcontractors agree that they will not discriminate against any employee or applicant for employment, to be employed in the performance of this contract with respect to his hire, tenure, terms, conditions or privileges of employment, or any matter directly or indirectly related to employment, because of his sex or age, except when based on a bona fide occupational qualification, or because of his race, color, religion, national origin or ancestry (Act 251 P.A. 1955, as amended). The contractor further agrees that he will take affirmative action to insure that applicants are employed and that employees are treated during employment without regard to age, sex, race, creed, color or national origin. Breach of this covenant may be regarded as a material breach of the contract.

Bidder will identify business entity as individual, or if doing business under assumed name, indicate assumed name, partnership (naming partners), corporation, foreign or domestic (naming principal officers), and indicate official capacity of person executing proposal and bid.

Extension of Award to the MITN Purchasing Cooperative or Other Governmental Agencies:

Extension of Award to the MITN Purchasing Cooperative or Other Governmental Agencies.

All vendors awarded contracts from this Quotation may, upon mutual agreement, extend pricing to the Michigan Intergovernmental Trade Network (MITN) Purchasing Cooperative or other governmental agencies.

Each entity is responsible for its own payments and is to be considered individually for billing and collection purposes. Each entity will provide their own purchase order and delivery location(s) and must be invoiced separately to the address indicated on their purchase order.

The City of Livonia is a member of the MITN Purchasing Cooperative. If your company is awarded item(s) referenced in the Request for Quotation, the cooperative governmental entities or other governmental agencies may wish to use this contract and will issue a purchase

FORM OF PROPOSAL

order for the item(s) awarded in the quotation. Each entity is responsible for its own payments and is to be considered individually for billing and collection purposes. Each entity will provide its own purchase order and delivery location(s) and must be invoiced separately to the address indicated on their purchase order.

___X___ If an award if made by the City of Livonia, it is agreed that the contract will be extended to the MITN Purchasing Cooperative or other governmental agencies, under the same prices, terms and conditions.

_____ Our company is NOT interested in extending the contract.

Firm Name Revels Turf and Tractor
(If corporation, partnership, or assumed name)

Address 7060 Kensington Rd

City/State/Zip Brighton, MI 48116

Phone 616-485-2545 FAX _____

Signature Rusty Willard Date 07/14/2022
(Person executing bid and official capacity)

Eric Cowan
(Names of principal officers ad designate official capacity)

_____
(If partnership or assumed name, indicate names of owners)

Company contact person to whom questions regarding this bid submission should be directed is:

Name: Rusty Willard

Title Sales manager

Phone No. (616) 485-2545

Email: Rwillard@revelstractor.com

FORM OF PROPOSAL

COMPANY NAME: Revels Turf and Tractor

Item	Description	Qty.	Unit Price	Total
1	John Deere 2700 E-Cut Hybrid Triplex Mower or Approved Equivalent Mfg. John Deere Model # 2700 E-Cut Hybrid Triplex Mower Warranty 3 years, 4 years on Electric Motor/Controllers Lead Time 2023 budget year days	5	$ 40,126.32	$ 200,631.60
2	John Deere 7400A Trim and Surround Mower or Approved Equivalent Mfg. John Deere Model # 7400A Trim and surrounds mower Warranty 3 years Lead Time 2023 budget year days	2	$ 44,567.64	$ 89,135.28
3	John Deere 8800A TerrainCut Rough Mower or Approved Equivalent Mfg. John Deere Model # 8800A Terraincut rough mower Warranty 3 years Lead Time 2023 budget year days	1	$ 64,801.62	$ 64,801.62
4	John Deere 6500A PrecisionCut Fairway Mower Mfg. John Deere Model # 6500A Precisioncut fairway mower Warranty 3 year Lead Time 2023 budget year days	2	$ 49,069.02	$ 98,138.04
5	Smithco Spray Star 1200 Sprayer Vehicle or Approved Equivalent Mfg. Smithco Model # Spray Star 1200 sprayer Warranty 3 years Lead Time 2023 budget year days	1	$ 48,941.70	$ 48,941.70
6	**SHIPPING & HANDLING ALL ITEMS 1-5**			$ 0
7	**SUBTOTAL ITEMS 1-6**			$ 501,648.24

ITEM	TRADE-IN DESCRIPTION	QTY	COMPLETE FOR THE SUM OF:
8	Toro 3150	5	$ 12,925
9	Jacobsen Greens King IV	3	$ 7,825
10	Toro 3500-D	1	$ 1,800
11	John Deere 7400	1	$ 3,500
12	Smithco Sand Star Zee	1	$ 2,800
13	**SUBTOTAL ITEMS 7-12**		$ 28,850
	TOTAL (Item 7 *minus* Item 13)		$ 472,798.24

FORM OF PROPOSAL

ANNUAL LEASE PAYMENTS

COMPANY NAME: Revels Turf and Tractor

YEAR	AMOUNT	INTEREST RATE
1	$ 105,809.70	5.8 %
2	$ 105,809.70	5.8 %
3	$ 105,809.70	5.8 %
4	$ 105,809.70	5.8 %
5	$ 105,809.70	5.8 %
TOTAL AMOUNT PAID YEARS 1-5 *Current municipal interate rate is 5.1% as of July. Increase in rate due August 1st. This bid will not exceed the quoted interest rate.*		$ 529,048.50

The annual lease payments specified must take into account the trade-in value of equipment specified on page PF-3.

Company will honor $1 buy-out at end of lease: X Yes _____ No

Bidder shall include sample lease agreement with bid response. Lease agreement is subject to review and approval of the City of Livonia Law Department.

GOLF COURSE LAWN MAINTENANCE EQUIPMENT
REFERENCE FORM

COMPANY NAME: Revels Turf and Tractor

Reference Company Name: Oakland Hills Country Club City/State: Bloomfield Hills,MI	
Summary of Work Performed: John Deere and allied equipment sales.	
Dates of Work: 2017-present	
Company Contact Person: Phil Cuffare	Title: Head agronomist
Phone Number: 585-734-0968	Email: pcuffae@oakland-hills.com

Reference Company Name: Country Club of Detroit City/State: Grosse Pointe Farms, MI	
Summary of Work Performed: John Deere and allied equipment sales.	
Dates of Work: 2015- Present	
Company Contact Person: Ross Miller	Title: Superintendent
Phone Number: 419-410-7326	Email: Rmiller@ccdetroit.org

Reference Company Name: Walnut Creek Country Club City/State: South Lyon, MI	
Summary of Work Performed: John Deere and allied equipment sales.	
Dates of Work: 2014-present	
Company Contact Person: Scott Rettmann	Title: Superintendent
Phone Number: 248-345-0999	Email: srettmann@walnutcreekcc.net

STATEMENT OF QUALIFICATIONS
GOLF COURSE LAWN MAINTENANCE EQUIPMENT

Respondents must answer all questions. If more space is needed to complete a question, attach a separate sheet.

Company Name: Revels Turf and Tractor

Address 7060 Kensington Rd., Brighton, MI 48116

Contact Person: Rusty Willard Title Sales manager

Phone No. 616-485-2545 Email Rwillard@revelstractor.com

1. Number of years operating under you present name: 14 years

2. Number of years present owners have owned the company: 5 years

3. How many years of experience does your company have providing the services specified in the bid documents? 36 years on the golf equipment side. 61 years on selling and servicing equipment.

4. List municipalities who the bidder has serviced in the past five (5) years to present:

Name of Municipality	Term of Service
City of Detroit	2018-Present
Oakland County	2017-Present
City of Midland	2018-Present
City of Dearborn	2018-Present

5. General nature of work performed by your company:
Selling and servicing golf and sports turf equipment.

6. Have you provided equipment to the City of Livonia in the last ten (5) years? If so, please specify:

Year of Service	Department Serviced	Description of Services Provided
2018-Present	General maintenance	John Deere 1200A field rakes
2017-present	Golf Courses	Allied equipment sales and parts service.

7. List the members of the team who will oversee the fulfilment of this contract..

Name	Title	Role	Years of Experience
Rusty Willard	Sales manager	Sell and help customer with any issues	6 years
Eric Cowan	Regional Manager	Assist Sales manger	10 years
Wayne Mustaffe	Head technician	Service/warranty work	30 years
Larry Adcock	Corporate sales manager	Oversees sales and service team	25 years

8. What challenges to you foresee?
Equipment availability.

9. What is included in your base price for equipment? What services will incur additional fees:
3 year warranty is included in the price. All set up and delivery cost are included as well.

10. Provide Phone Numbers for Customer contact during normal business hours. Provide phone number for 24-hour contact by City of Livonia personnel.

Company Phone No.: Parts: 800-849-5469 & Service 833-709-1791

24-Hour Phone No.: 616-485-2545

11. Hours of Operation

DAYS	BUSINESS HOURS
Monday – Friday	7:00a.m.-4:00 PM for parts and service.
Saturday	Sales manager always available.
Sunday	
Holidays	

12. Would your company be willing to accept additional orders for the equipment specified under the same terms, conditions and pricing? X Yes _____ No

If "yes" how long is the pricing offered valid 30 days after quoted. (state specific date)

COMPANY NAME: Revels Turf and Tractor

2023 City of Livonia Golf Division Maintenance

Equipment Lease Specifications

Lease Overview

- 5-year lease package with $1 buyout at end of term (Annual Payments)
- Minimum 3-year warranty on all equipment
- Must be able to provide all equipment listed below and meet minimum specifications for each
- Acceptance of listed equipment on trade-in
- Final price of package must be same at time of bid and at delivery of equipment

Equipment Overview

- (5) Hybrid Greens Mowers
- (2) 3 Deck Trim Mowers
- (2) Fairway Mowers
- (1) 5 Deck Rough Mower
- (1) 200 Gallon Sprayer

Specifications

1. **John Deere 2700 E-Cut Hybrid Triplex Mower or Approved Equivalent Quantity (5 Units)**
    - TechControl Display Screen with Mow, Turn and Transport Speed Can Be Controlled and Locked
    - TechControl Display Gives Timely Diagnostic Feedback to the Operator and Service Technician
    - Eco Friendly Gas Engine with Min and Max Capability
    - 4 Year Warranty on Electric Motor and Controllers
    - 56V Alternator to Run Reels
    - Two-Wheel Drive
    - Smooth Tires and Wheels
    - Electric Reel Motors
    - (3) 14 Blade Reels (Each Unit)
    - Quick Adjust Reels with Speed Link for Easy Change of Height
    - Frequency of Clip Control from TechControl Computer
    - Cutting Unit Counterweights
    - Smooth Front and Rear Rollers
    - Rear and Front Roller Scraper Bars
    - Grass Catcher Kits
    - LED Work Light Kit
    - 4G Modem which Streams Field Data to Operation Center and Dealer for Remote Support

2. **John Deere 7400A Trim and Surround Mower or Approved Equivalent Quantity (2 Units)**
    - TechControl Display Screen with Mow, Turn and Transport Speed Can Be Controlled and Locked
    - TechControl Display Gives Timely Diagnostic Feedback to the Operator and Service Technician
    - 3 Cylinder Diesel Engine
    - 41HP Tier 4 Compliant
    - 2-Stage Dry Element Air Cleaner
    - Hydraulic Power Steering
    - All Wheel Drive
    - Suspension Seat with Weight and Lumbar Adjustment
    - 3 Hydraulic Driven Rotary Mulching/Rear Discharge Decks
    - Deck Shifting Capabilities
    - LED Work Light Kit
    - 4G Modem which Streams Field Data to Operation Center and Dealer for Remote Support

3. **John Deere 8800A TerrainCut Rough Mower or Approved Equivalent Quantity (1 Unit)**
    - TechControl Display Screen with Mow, Turn and Transport Speed Can Be Controlled and Locked
    - TechControl Display Gives Timely Diagnostic Feedback to the Operator and Service Technician
    - 4 Cylinder Diesel Engine
    - 55 HP Tier 4 Compliant
    - 2-Stage Dry Element Air Cleaner
    - Hydraulic Power Steering
    - Suspension Seat with Weight and Lumbar Adjustment
    - 5 Hydraulic Driven Rotary Mulching/Rear Discharge Decks
    - LED Work Light Kit
    - 4G Modem which Streams Field Data to Operation Center and Dealer for Remote Support

4. **John Deere 6500A PrecisionCut Fairway Mower**
   Quantity (2 Units)
   - TechControl Display Screen with Mow, Turn and Transport Speed Can Be Controlled and Locked
   - TechControl Display Gives Timely Diagnostic Feedback to the Operator and Service Technician
   - 3 Cylinder 24 HP Diesel Engine
   - 2-Stage Dry Element Air Cleaner
   - Hydraulic Power Steering
   - All Wheel Drive
   - Suspension Seat with Weight and Lumbar Adjustment
   - (5) 22in 7 Bladed Reels (Each Unit)
   - Quick Adjust reels
   - At Least 100" Total Width of Cut
   - Heavy Duty Grooved Front Roller w/Scraper Bar
   - Heavy Duty Smooth Rear Rollers
   - Smooth Tires and Wheels
   - LED Work Light Kit
   - 4G Modem which Streams Field Data to Operation Center and Dealer for Remote Support

5. **Smithco Spray Star 1200 Sprayer Vehicle or Approved Equivalent**
   Quantity (1 Unit)

   - 200-gallon Spray Tank with UV Inhibitors
   - Hinged Lid with Locking Device and Strainer Basket
   - 35HP Engine
   - Hydraulic Power to two-Wheel Drive Traction System
   - Teejet Radion 8140 Controller. Auto Rate Controller
   - Teejet Filters/Screens/Nozzle Selection
   - Touch Screen Display with Up to 6 Different Rates
   - 18.5' Break Away Booms
   - Foam Marking Kit
   - Hypro Stainless Steel Centrifugal Pump
   - Center Mount Engine and Hydro-Pump.
   - 20-220 Gallons Aer Acre or 0.5-5 Gallons Per 1000 ft2
   - Production Rate = 6.4 Acres/Hour @ 3.5 mph Up to 75 Acres Per Day
   - Fuel Capacity 10 Gallons
   - LED Work Light Kit

Bid responses shall include warranty documentation for all products offered.

2023 City of Livonia Golf Division

Maintenance Trade-In List

Fox Creek

City Number	Make/Model	Serial #	Hours
628	Toro 3150	04375-250000760	2965
629	Toro 3150	04375-250000816	2812
670	Jacobsen Greens King IV	6228804742	2858
672	Jacobsen Greens King IV	6228804933	2349

Whispering Willows

City Number	Make/Model	Serial #	Hours
627	Toro 3150	04357-250000814	4667
635	Toro 3150	04357-240001001	4640
699	Jacobsen Greens King IV	622804965	2848

Idyl Wyld

City Number	Make/Model	Serial #	Hours
636	Toro 3150	04357-240000972	3612
667	Toro 3500-D	30839-270000849	7690
719	John Deere 7400	TC7400X010332	????
???	Smithco Sand Star Zee	ZTR130	348

Bidder may inspect trade-in equipment by appointment only. Contact Doug Ware at (248) 442-8830 or via email at DWare@livonia.gov.

Meeting was called to order at 8:06 p.m. by Council Vice President Jim Jolly. Present: Vice President Laura Toy, Scott Bahr, Rob Donovic, Scott Morgan, Brandon McCullough. Absent: Kathleen McIntyre

Elected and appointed officials present: Maureen Miller Brosnan, Mayor, Susan Nash, City Clerk, Paul Bernier, City Attorney, Todd Zilincik, City Engineer, LaShawn Thomas, Director of Governmental Affairs, Thomas Goralski Police Chief, Brandie Isaacson, Housing Director, Ted Davis, Superintendent of Parks and Recreation, Jacob Rushlow, Assistant Superintendent of Public Works.

Councilmember Scott Bahr led the Pledge of Allegiance.

9. AWARD OF BID: Department of Parks and Recreation, re: to replace the sound equipment at the Jack E. Kirksey Recreation Center, from budgeted funds.

   Ted Davis, Superintendent of Parks and Recreation, presented the request to Council.

   Councilmember Scott Bahr asked if they had seen issues with the equipment. Ted Davis indicated he has seen issues in the pool areas.

   Councilmember Scott Bahr offered an approving motion for the Consent agenda.

   DIRECTION: APPROVAL CONSENT

LETTER TO THE LIVONIA CITY COUNCIL

9.

Parks and Recreation
September 14, 2022

MEETING DATE	PREPARED BY
S092622/R100522	Ted Davis, CPRP, Superintendent of Parks and Recreation,

AGENDA ITEM

AWARD OF BID: Department of Parks and Recreation, re: to replace the sound equipment at the Jack E. Kirksey Recreation Center, from budgeted funds.

BACKGROUND

The Department of Parks and Recreation has solicited bids to replace the sound equipment throughout the Center. The work would include new speakers, amplifiers, mixers, docking modules, and mounting for MPR, Front Desk, Pools, Aerobics Studio, and Gyms. If approved, the work should be completed before the end of the fiscal year.

The Department prepared specifications, and an advertisement for bids was placed on the MITN website. One (1) company submitted a bid by the specified date of September 13, 2022.

RECOMMENDATION

We recommend that the City Council award the project to the sole bidder, Fit-Tech, 5350 Dogwood Drive, White Lake, MI 48383, in an amount not to exceed $41,400.59. Attached for review is their form of proposal and bid specification.

FISCAL CONSIDERATION

Sufficient funds are budgeted in account 208-755-976-000.

ATTACHMENTS

1. SOUND EQUIPMENT BID completed

APPROVED BY

Michael T Slater

Michael Slater, Finance Director

Date: September 15, 2022

Date: September 15, 2022

Paul Bernier, City Attorney

Date: September 16, 2022

Maureen Miller Brosnan, Mayor

CITY OF LIVONIA – REQUEST FOR BID

KIRKSEY RECREATION CENTER SOUND EQUIPMENT

The City of Livonia Michigan will receive sealed bids via the MITN WEBSITE ONLY (www.mitn.info) for SOUND EQUIPMENT FOR THE KIRKSEY RECREATION CENTER located at 15100 Hubbard, Livonia, MI, according the specifications herein. No alternates will be accepted. Items must be bid as specified. Sealed bids will be received until 2:00 p.m., on SEPTEMBER 13, 2022. No faxed bids will be accepted. No late bids will be accepted. No physical bids will be accepted. All bid responses must be submitted in Adobe Acrobat PDF format via the MITN website.

Bids received via the MITN website by the specified due date and time will be publicly opened at the due date and time via Zoom. Vendors may attend the bid opening virtually by using the following credentials:

By Computer:

https://us02web.zoom.us/j/82294127641

By Phone:

Phone (312) 626-6799
Webinar ID: 822 9412 7641

The City reserves the right to reject in or in part any and all bids received, to waive any irregularities or informalities or both; as it is determined to be in the best interests of the City of Livonia to do so.

The City of Livonia officially distributes bid documents through the Michigan Intergovernmental Trade Network (BidNet). **Bid documents obtained from any other source are not considered official copies.** The City of Livonia cannot guarantee the accuracy of any information not obtained from the MITN website and is not responsible for any errors contained by any information received from alternate sources. Only those firms who obtain the RFB documents from the MITN system are guaranteed access to receive addendum information, if such information is issued. If you obtained this document from a source other than the source indicated, it is recommended that you register on the MITN site, www.mitn.info and obtain an official copy.

A prebid meeting and site visit will take place on SEPTEMBER 7, 2022 at 1:00 P.M. at the Kirksey Recreation Center at the address listed above. Bidders are encouraged to attend.

QUESTIONS:
Questions regarding the Request for Bid must be submitted **in writing** to the attention of Enna A. Bachelor, Purchasing Manager, via email at: ebachelor@livonia.gov. All questions received by September 8, 2022 will be responded to in writing in the form of an addendum which will be posted on the MITN website. No phone calls will be accepted. All inquiries regarding this solicitation shall be submitted to the Purchasing Manager.

INSTRUCTIONS TO BIDDERS

FOR
KIRKSEY RECREATION CENTER SOUND EQIUPMENT

1. Bids will be received by the City of Livonia, Michigan, as owner, until 2:00 p.m., local time, on SEPTEMBER 13, 2022 VIA THE MITN WEBSITE ONLY (WWW.MITN.INFO) Physical bid submission will not be accepted. which time said proposals will be opened and publicly read. Late bids will not be considered.

2. Bidders are encouraged to attend a prebid meeting held on SEPTEMBER 7, 2022 at 11:00 a.m. at the Kirksey Recreation Center located at 15100 Hubbard, Livonia, MI. The City will address vendor questions and provide a walk through of the recreation center spaces which will receive new sound equipment. Vendor is responsible for all measurements necessary to properly install equipment requested.

3. Bids shall be for items as specified on attached Price Sheet without deviation. No alternates will be accepted.

3. Bids shall be in a single PDF Adobe Acrobat Format.

5. If any figure already entered on the proposal form by the bidder is to be altered, it shall be crossed out with ink and the new unit price entered above it or below it and initialed by the bidder.

6. The unit price shall be entered where indicated.

7. The bid of any City-based firm may be deemed a better quote than the quote of any competing firm which is not City-based, whenever the quote of such competing firm shall be less than three percent lower than the quote of the City-based firm on any contract in an amount of $100,000 or less, and less than one percent lower on any amount bid in excess thereof. The firm making the lowest quote thus evaluated shall be deemed the lowest bidder. (Section 3.04.140.E. of the Livonia Code of Ordinances, as amended).

8. It is understood that the quantities of materials to be furnished as stated in the proposal are approximate and are given only as a basis for comparing bids.

9. Unless otherwise specified, delivery shall be to the City of Livonia, Kirksey Recreation Center, 15100 Hubbard Street, Livonia, MI 48154.

10. All invoices shall be submitted to the City of Livonia on the basis of the unit prices bid within the contract period specified.

CITY OF LIVONIA REQUEST FOR BID
SOUND EQUIPMENT FOR THE KIRKSEY RECREATION CENTER

Submitted by: ____Fit-Tech Inc_____
(COMPANY NAME)

The undersigned, by the submission of this proposal, represents that he is familiar with and has determined for himself the nature and extent of the proposal work and the conditions under which it must be performed and completed, and agrees that he will contract with the City of Livonia to furnish at and for the following monies all materials, labor, equipment, insurance, permits, supervision and all other things necessary or incidental to complete the entire work in accordance with the appended specifications, general conditions, and related contract documents. By the submission of this bid, the undersigned represents that he is familiar with and understands all of the above-referenced contract documents.

In accordance with the contract documents including the furnishing of all labor, material, equipment, permits, and insurance necessary to complete the work, I (we) agree to perform said project as follows:

SOUND EQUIPMENT – AS PER SPECIFICATIONS – NO ALTERNATES ACCEPTED

The undersigned has checked the bid figures carefully and understands that he shall be responsible for any error or omission in this bid offer and is in receipt of all addenda issued. Indicate addendum number to confirm receipt.

Addendum #_____ Addendum #_____ Addendum #_____

The undersigned agrees that, if the proposal made herein is accepted, he will satisfactorily perform and complete all of the work and meet all of the requirements and obligations imposed upon him by the contract including the plans, specifications and general conditions.

Also, the undersigned agrees that, if the above proposal is accepted, he will execute the contract and furnish the necessary proofs of insurance carriage within fifteen (15) calendar days from such acceptance.

In submitting this sealed bid, it is understood that the City of Livonia reserves the right to reject or accept any or all proposals in whole or in part and waive any irregularities or informalities therein. It is agreed that this bid may not be withdrawn for sixty (60) days from the opening thereof.

The contractor and his subcontractors agree that they will not discriminate against any employee or applicant for employment to be employed in the performance of this contract with respect to his hire, tenure, terms, conditions, or privileges of employment, or any matter directly or indirectly related to employment, because of his sex or age, except when based on a bona fide occupational qualification, or because of his race, color, religion, national origin or ancestry (Act 251, P.A. 1955, as amended). The contractor further agrees that he will take

affirmative action to insure that applicants are employed and that employees are treated during employment without regard to age, sex, race, creed, color or national origin. Breach of this covenant may be regarded as a material breach of the contract.

Bidder will identify business entity as individual, or if doing business under assumed name, indicate assumed name, partnership (naming partners), corporation, foreign or domestic (naming principal officers), and indicate official capacity of person executing proposal and bid.

Firm Name Fit-Tech Inc Date 9-6-22
(If corporation, partnership, or assumed name)

Signature _____ Neal Stulberg
(Person executing bid and official capacity)

_____

_____

(Names of principal officers and designate official capacity)
(If partnership or assumed name, indicate names of owners)

Address 5350 Dogwood Drive

City/State/Zip White Lake MI 48383

Phone 248-889-9500 FAX 248-889-3060

The contractor shall indemnify and hold harmless the City of Livonia and their employees from and against all claims, losses, and expenses including attorney's fees arising out of or resulting from the performance of the work, provided that any such claim, damage, loss or expense (a) is attributable to bodily injury, sickness, disease or death, or to injury to or destruction of property, and (b) is caused in whole or in part by any negligent act or omission of the Contractor, any Subcontractor, anyone directly or indirectly employed by any of them or anyone for whose acts any of them may be liable.

SOUND EQUIPMENT FOR THE CITY OF LIVONIA KIRKSEY RECREATION CENTER

COMPANY NAME: Fit-Tech Inc

PRICE SHEET

ALL ITEMS MUST BE BID AS SPECIFIED. NO ALTERNATES WILL BE ACCEPTED.

GROUP	DESCRIPTION	COMPLETE FOR THE SUM OF:
A	**MULTI-PURPOSE ROOM** • 1 SP800A Octasound Central Speaker • 1 OS2X12 Octasound Subwoofer • 1 SPH2L-SS-06 2x6 feet 3/16" diameter stainless steel wire rope hanging kit • 1 SPH5A hanging kit • 1 RABX2 Octasound Bluetooth and Aux input for Smartphones MP3,PC,IPODSt • 1 RAMX2 Octasound Mic and Aux input for Smartphones MP3,PC,IPODS • 1 RUSBX2 Octasound long run USB charging kit • 1 PS-RA power supply • 1 RDL ST-MX3 3 channel audio mixer w/power supply • 1 RP-6 Octasound 3RU rack plate with blank panels • 1 ST-VP2 docking module w/power supply • 1 power bar with surge protections • 1 6U-12 wall mounted enclosed rac • 1 XTI 1002 Crown DSP Amp • 1 cable • 1 BLX14R/SM35 SHURE wireless headset system	$ 6179.32
B	**FRONT DESK & POOL** • 1 BLX14R/SM35 SHURE wireless headset system • 1 BLXR14/SM58 Shure wireless • 1 ST-VP2 docking module w/power supply	$ 1,824.37
C	**AEROBICS STUDIO**	$ 6,179.32

	• 1 SP800A Octasound Central Speaker • 1 OS2X12 Octasound Subwoofer • 1 SPH2L-SS-06 2x6 feet 3/16” diameter stainless steel wire rope hanging kits • 1 SPH5A hanging kit • 1 RABX2 Octasound Bluetooth and Aux input for Smartphones MP3,PC,IPODS • 1 RAMX2 Octasound Mic and Aux input for Smartphones MP3,PC,IPODS- No equivalent • 1 RUSBX2 Octasound long run USB charging kit • 1 PS-RA power supply • 1 RDL ST-MX3 3 channel audio mixer w/power supply • 1 RP-6 Octasound 3RU rack plate with blank panels • 1 ST-VP2 docking module w/power supply • 1 power bar with surge protections • 1 6U-12 wall mounted enclosed rack • 1 XTI 1002 Crown DSP Amp • 1 cable • 1 BLX14R/SM35 SHURE wireless headset system	
D	**MAIN GYMS & MAC GYMS** • 2 SP820A Octasound Central Speaker • 2 OS2X12 Octasound Subwoofer • 4 SPH2L-SS-06 2x6 feet 3/16” diameter stainless steel wire rope hanging kits- No equivalent • 2 RABX2 Octasound Bluetooth and Aux input for Smartphones MP3,PC,IPODS • 2 RAMX2 Octasound Mic and Aux input for Smartphones MP3,PC,IPODS • 2 RUSBX2 Octasound long run USB charging kit • 2 PS-RA power supplies • 2 RP-6 Octasound 3RU rack plate with blank panels • 2 ST-VP2 docking module w/power supply • 2 RDL ST-MX3 3 channel audio mixer w/power supply	$ 16,977.58

	• 1 power bar with surge protections • 1 27U component rack • 2 SMLV-2-LD dual gang wall mount case for RAMX2 & RUSBX2 w/long run USB charger • 2 XTI 2002 Crown DSP Amp • 2 BLX14R/SM35 SHURE wireless headset system	
E	SUBTOTAL GROUPS A-D	$ 31,160.59
F	REMOVAL & DISPOSAL OF EXISTING EQUIPMENT	$ 3,000.00
G	INSTALLATION OF NEW EQUIPMENT	$ 6,500.00
H	SHIPPING AND HANDLING	$ 740.00
I	TOTAL ALL GROUPS (GROUP E-H)	$ 41,400.59

- Is an extended warranty beyond the three years requested available? ____Y __X__N If yes:
  Price for extended warranty $_____
  Length of extended warranty _____
- Lead time for equipment? __7-30 days on most___ days
- Installation complete within __7_____days of receiving equipment
- Prices offered valid until __10-30-22_____(date)
- Does your company anticipate any issues with the availability of the equipment specified?
  __X__Y ____N If yes, please identify any equipment which may be affected by long lead times or product availability.
  _____Shure wireless system may be on back order to the end__
  __of year conditional on chip shortages._____
  _____

Delivery and installation shall be approved by City Staff.

Contact person for technical questions regarding equipment:

Name__Neal Stulberg_____ Title__President_____

Email__Fittech@earthlink.net_____ Phone__248-709-2747_____

SPECIFICATIONS FOR SOUND SYSTEM AT KIRKSEY RECREATION CENTER

- Sound system replacement required for Main Gyms, Mac Gyms, Aerobics Studio, MPR (Multi Purpose Room) Front Desk and Pool. All locations need to be included with bid submittal. No exceptions.
- Installation labor including removal and disposal of existing sound system for Main Gyms, Mac Gyms, Aerobics Studio and MPR
- Update wireless for Front Desk and Pool
- One location for inputs from microphones, smartphones, IPODS, MPS's, computers, Bluetooth, etc. in Aerobics Studio and MPR
- One location for convenient USB phone charging at mixer locations
- Remote Bluetooth access with USB charging in Main Gyms and Mac Gyms
- System wide ease of operation with intuitive interface. No user manual or training required.
- Pairing tones and volume pump tones via Bluetooth to be removed
- Amplifier is digitally tuned with protective crossovers. Tamper proof locked out controls
- All facility audio to dim during announcement from front desk
- Three-year warranty on all Octasound components- No equivalent
- Scissor lift provided for installation use
- See price sheet for specific equipment for each location identified in the specifications

KIRKSEY RECREATION CENTER SOUND EQUIPMENT
REFERENCE FORM

COMPANY NAME: Fit-Tech Inc

Reference Company Name: Beverly Hills Club City/State: Beverly Hills MI	
Summary of Work Performed: Updated Audio System	
Dates of Work: July 2019	
Company Contact Person: Shawn Sage	Title: Operations Mgr
Phone Number: 248-642-8500	Email: shawn_sagebhc@comcast.net

Reference Company Name: MFitness City/State: Sterling Heights MI	
Summary of Work Performed: Installed custom designed audio system	
Dates of Work: August 2018	
Company Contact Person: Chris Djuric	Title: Owner
Phone Number: 586-557-0518	Email: chrisdjuric@mfitclub.com

Reference Company Name: Your Fit Club City/State:	
Summary of Work Performed: Installed custom audio system for club and outdoor class solution	
Dates of Work: September 2012	
Company Contact Person: Kristen Martines	Title: Owner
Phone Number: 248-698-2100	Email: yourfitclub@gmail.com

KIRSKEY RECREATION CENTER SOUND EQUIPMENT
STATEMENT OF QUAIFICATIONS

Respondents must answer all questions. If more space is needed to complete a question, attach a separate sheet.

Company Name: Fit-Tech Inc

Address 5350 Dogwood Drive, White Lake MI 48383

Contact Person: Neal Stulberg Title President

Phone No. 248-709-2747 Email fittech@earthlink.net

1. Number of years operating under you present name: 29

2. Number of years present owners have owned the company: 29

3. How many years of experience does your company have replacing pool heaters. We do not replace pool heaters

4. List municipalities who the bidder has serviced in the past five (5) years to present:

Name of Municipality	Term of Service
Livonia Community Rec Center	2007-present
Bloomfield Hills Police Dept	2020-present
Waterford Police Dept	2010-present
Washington Twp Police & Fire	2011-present
Grosse Point Police	2019-present

5. General nature of work performed by your company:
Service of exsisting cardio and strength equipment. Sales and installation of TV audio Transmitters. Flooring sales and installation. Audio equipment sales and installation.

6. Have you performed work for the City of Livonia in the last ten (10) years? If so, please specify:

Year of Service	Department Serviced	Description of Services Provided
2007-present	Fitness	Cardio and Strength equipment service. Flooring install. TV audio transmitter install

7. List the members of the team who will oversee the contract and the roles they will perform.

Name	Title	Role	Years of Experience
Neal Stulberg	Owner	Installation of equipment	30
Jeff Porto	Technician	Installation of equipment	18

8. What challenges to you foresee?

I don't foresee any challenges as I've been on site and fully reviewed the job requirements There is a possibility of a supply chain issue on one component depending on when the order is placed. But that component should not hold up the job.

9. What is included in your base price for services? What services will incur additional fees:

Everything listed in the quote. Additional fees could apply to any changes per customer request after commencement of installation

10. Provide Phone Numbers for Customer contact during normal business hours. Provide phone number for 24-hour contact by City of Livonia personnel.

Company Phone No.: 248-889-9500

24-Hour Phone No.: 248-709-2747

11. Hours of Operation

DAYS	BUSINESS HOURS
Monday – Friday	8am-6pm
Saturday	Closed
Sunday	Closed
Holidays	Closed

COMPANY NAME: Fit-Tech Inc

SUBCONTRACTOR'S LIST – KIRSEY RECREATION CENTER SOUND EQUIPMENT

COMPANY NAME: Fit-Tech Inc

Subcontractor Name	Contact Person	Phone No.	Services to be provided

Michigan Department of Transportation

1304A (05/06)
City of Livonia

CERTIFICATE OF INSURANCE FOR CITY OF LIVONIA PROJECTS

INSTRUCTIONS: All information must be submitted on Form 1304A. Any other form is invalid.

The subscribing insurance company certifies that insurance of the types and for limits of liability covering the work under contract with City of Livonia has been obtained by the contractor named below and that the City of Livonia is an additional insured as to all General Liability/Commercial General Liability coverage. Such insurance, here certified, is written in accordance with the company's regular policies and endorsements subject to the company's applicable manuals of rules and rates, except (1) the insurance shall not be subject to the usual "x" - explosion, "c" - collapse or "u" - underground property damage exclusions.

The insurer shall agree to provide the City of Livonia, in writing, the following:

1. A 30-day prior notice of any insurer-initiated cancellation or reduction in coverage for reasons other than nonpayment of the premium.
2. A 10-day prior notice of any cancellation or reduction in coverage for nonpayment of the premium.
3. Immediate notice of Contractor's cancellation or reduction of coverage.

The contractor shall cease operations if any insurance is canceled or reduced, and shall not resume operations until new insurance is in force.

NAME OF INSURED			
ADDRESS	CITY	STATE	ZIP CODE
TELEPHONE NO.	FAX NO.		

ALL WORK PERFORMED FOR THE CITY OF LIVONIA AS A PRIME OR SUBCONTRACTOR

TYPE OF INSURANCE	POLICY NUMBER & NAME OF INSURANCE COMPANY (If more than one)	POLICY DATES EFFECTIVE	POLICY DATES EXPIRATION	LIMITS: Each Occurrence: $1,000,000 Aggregate: $2,000,000 BODILY INJURY AND PROPERTY DAMAGE LIABILITY	
☐ General Liability				General Aggregate	$
☐ Commercial General Liability				Prods. comp/ops Aggregate	$
☐ Claims Made ☐ Occurrence				Personal &Advertising Inj.	$
☐ $_____ P.D. Deductible				Each Occurrence	$
☐ XCU Exclusion				Fire Damage (any one fire)	$
☐ Owners/Contractors Protective				Medical Exp. (any one person)	$
AUTOMOTIVE LIABILITY				Combined Single Limit (Minimum $2,000,000.00)	$
☐ Any Auto					
☐ All Owned Autos				Bodily Injury (per person) (Minimum $500,000.00)	$
☐ Scheduled Autos					
☐ Hired Autos				Bodily Injury (per accident) (Minimum $1,000,000.00)	$
☐ Non-Owned Autos					
☐ Garage Liability				Property Damage (Minimum $1,000,000.00)	$
☐ Umbrella				Each Occurrence	$
				Aggregate	$
☐ Excess Liability Other Than Umbrella				Each Occurrence	$
				Aggregate	$
WORKERS COMPENSATION AND EMPLOYERS LIABILITY				**STATUTORY**	
				$	(Each Accident)
				$	(Disease- Policy Limit)
				$	(Disease- Each Emply.)
☐ Other					

NAME OF AGENCY	NAME OF INSURANCE COMPANY (If only one for all policies)		
ADDRESS	CITY	STATE	ZIP CODE
TELEPHONE NO.	FAX NO.		

P:\Forms\insurance\Certificate of Insurance 1304A.doc

Michigan Department of Transportation

1304A (05/06)
City of Livonia

CERTIFICATE OF INSURANCE FOR CITY OF LIVONIA PROJECTS

INSTRUCTIONS: All information must be submitted on Form 1304A. Any other form is invalid.

The subscribing insurance company certifies that insurance of the types and for limits of liability covering the work under contract with City of Livonia has been obtained by the contractor named below and that the City of Livonia is an additional insured as to all General Liability/Commercial General Liability coverage. Such insurance, here certified, is written in accordance with the company's regular policies and endorsements subject to the company's applicable manuals of rules and rates, except (1) the insurance shall not be subject to the usual "x" - explosion, "c" - collapse or "u" - underground property damage exclusions.

The insurer shall agree to provide the City of Livonia, in writing, the following:

1. A 30-day prior notice of any insurer-initiated cancellation or reduction in coverage for reasons other than nonpayment of the premium.
2. A 10-day prior notice of any cancellation or reduction in coverage for nonpayment of the premium.
3. Immediate notice of Contractor's cancellation or reduction of coverage.

The contractor shall cease operations if any insurance is canceled or reduced, and shall not resume operations until new insurance is in force.

NAME OF INSURED			
THE SMITH COMPANY			
ADDRESS: 12345 AVENUE	CITY: LIVONIA	STATE: MI	ZIP CODE: 12345
TELEPHONE NO.: (734)123-4567	FAX NO.:		

ALL WORK PERFORMED FOR THE CITY OF LIVONIA AS A PRIME OR SUBCONTRACTOR

TYPE OF INSURANCE	POLICY NUMBER & NAME OF INSURANCE COMPANY (If more than one)	POLICY DATES EFFECTIVE	POLICY DATES EXPIRATION	LIMITS: Each Occurrence: $1,000,000 Aggregate: $2,000,000 BODILY INJURY AND PROPERTY DAMAGE LIABILITY	
☒ General Liability				General Aggregate	$ 2,000,000.00
☐ Commercial General Liability				Prods. comp/ops Aggregate	$ 2,000,000.00
☐ Claims Made ☒ Occurrence				Personal &Advertising Inj.	$ 1,000,000.00
☐ $_____ P.D. Deductible				Each Occurrence	$ 1,000,000.00
☐ XCU Exclusion				Fire Damage (any one fire)	$
☒ Owners/Contractors Protective				Medical Exp. (any one person)	$ 5,000.00
AUTOMOTIVE LIABILITY				Combined Single Limit (Minimum $2,000,000.00)	$ 2,000,000.00
☒ Any Auto					
☐ All Owned Autos				Bodily Injury (per person) (Minimum $500,000.00)	$ 500,000.00
☐ Scheduled Autos					
☐ Hired Autos				Bodily Injury (per accident) (Minimum $1,000,000.00)	$ 1,000,000.00
☐ Non-Owned Autos					
☐ Garage Liability				Property Damage (Minimum $1,000,000.00)	$ 1,000,000.00
☒ Umbrella				Each Occurrence	$ 1,000,000.00
				Aggregate	$ 1,000,000.00
☒ Excess Liability Other Than Umbrella				Each Occurrence	$ 1,000,000.00
				Aggregate	$ 1,000,000.00
WORKERS COMPENSATION AND EMPLOYERS LIABILITY				STATUTORY	
				$ 500,000.00	(Each Accident)
				$ 500,000.00	(Disease- Policy Limit)
				$ 500,000.00	(Disease- Each Emply.)
☐ Other					

NAME OF AGENCY	NAME OF INSURANCE COMPANY (If only one for all policies)		
AMERICA'S INSURANCE COMPANY			
ADDRESS: 54321 STREET	CITY: ANY CITY	STATE: MI	ZIP CODE: 54321
TELEPHONE NO.: (734)765-4321	FAX NO.:		

P:\Forms\insurance\Certificate of Insurance 1304A.doc

THIS ENDORSEMENT CHANGES THE POLICY. PLEASE READ IT CAREFULLY.

ADVANCE NOTICE OF CANCELLATION, NONRENEWAL OR COVERAGE REDUCTION OR RESTRICTION PROVIDED BY US

This endorsement modifies insurance provided under the following:

COMMERCIAL GENERAL LIABILITY COVERAGE PART

SCHEDULE

Person(s) or Organization(s)	Address
CITY OF LIVONIA	12973 FARMINGTON ROAD LIVONIA, MI 48150

Number of Days Notice **30**

If this policy is cancelled (other than nonpayment of premium) or nonrenewed or if the coverage provided by this policy is reduced or restricted (except for any reduction in the Limits of Insurance due to claims payments), we will provide written notice to the person(s) or organization(s) listed in the Schedule.

We will provide this notice by mail 30 days in advance of any policy cancellation, nonrenewal or coverage reduction or restriction or as indicated in the Number of Days Notice in the Schedule.

All terms and conditions of this policy apply unless modified by this endorsement.

INS-5

Includes copyrighted material of Insurance Services Office, Inc., with its permission.

THIS ENDORSEMENT CHANGES THE POLICY. PLEASE READ IT CAREFULLY.

ADDITIONAL INSURED – STATE OR GOVERNMENTAL AGENCY OR SUBDIVISION OR POLITICAL SUBDIVISION – PERMITS OR AUTHORIZATIONS

This endorsement modifies insurance provided under the following:

OWNERS AND CONTRACTORS PROTECTIVE LIABILITY COVERAGE PART

SCHEDULE

State Or Governmental Agency Or Subdivision Or Political Subdivision:
CITY OF LIVONIA **12973 FARMINGTON ROAD** **LIVONIA, MI 48150**
Information required to complete this Schedule, if not shown above, will be shown in the Declarations.

A. **Section II – Who Is An Insured** is amended to include as an additional insured any state or governmental agency or subdivision or political subdivision shown in the Schedule, subject to the following provisions:

1. This insurance applies only with respect to operations performed by you or on your behalf for which the state or governmental agency or subdivision or political subdivision has issued a permit or authorization.

However:

a. The insurance afforded to such additional insured only applies to the extent permitted by law; and

b. If coverage provided to the additional insured is required by a contract or agreement, the insurance afforded to such additional insured will not be broader than that which you are required by the contract or agreement to provide for such additional insured.

2. This insurance does not apply to:

a. "Bodily injury" or "property damage" arising out of operations performed for the federal government, state or municipality; or

b. "Bodily injury" or "property damage" included within the "products-completed operations hazard".

B. With respect to the insurance afforded to these additional insureds, the following is added to **Section III – Limits Of Insurance:**

If coverage provided to the additional insured is required by a contract or agreement, the most we will pay on behalf of the additional insured is the amount of insurance:

1. Required by the contract or agreement; or

2. Available under the applicable Limits of Insurance shown in the Declarations;

whichever is less.

This endorsement shall not increase the applicable Limits of Insurance shown in the Declarations.

All terms and conditions apply unless modified by this endorsement.

© Insurance Services Office, Inc., 2012

CONTRACTOR'S DECLARATION

I hereby declare that I have not, during the period _____

to _____, A.D. 20_____, performed any work, furnished any

material, sustained any loss, damage or delay for any reason, including soil conditions

encountered or created, or otherwise done anything for which I shall ask, demand, sue

for, or claim compensation from the Plymouth Road Development Authority, the Owner, or its agents, in addition

to the regular items set forth in the contract numbered _____, and dated

_____, A.D., 20_____,

for_____

_____

executed between myself and the Greenmead Historical Park, and in the Change Orders for work issued by the Greenmead Historical Park in writing as provided thereunder, except as I hereby make

claim for additional compensation and/or extension of time, as set forth on the itemized

statement attached hereto.

There is/is not (circle one) an itemized statement attached.

The Contractor further certifies that all his indebtedness for labor and material

incorporated in the work covered by this estimate has been fully paid and/or satisfactory

arrangements with material supplies have been made.

_____
Contractor

By_____

Title_____

Date:_____

CD

CONTRACTOR'S AFFIDAVIT

STATE OF MICHIGAN)
ss
COUNTY OF _____)

The undersigned Contractor, _____,

hereby represents that on _____he (it) was awarded a Contract by the City of Livonia – Greenmead Historical Park, Wayne County, Michigan, to provide INSTALLATION OF SOUND EQUIPMENT AT KIRKSEY RECREATION CENTER. in accordance with the terms and conditions of Contract No. _____, and the undersigned further represents that the subject work has now been accomplished and the said Contract has now been completed.

The undersigned hereby warrants and certifies that all of his (its) indebtedness arising by reason of the said Contract has been fully paid or satisfactorily secured; and that all claims from subcontractors and others for labor and material used in accomplishing the said project, as well as all other claims arising from the performance of said Contract, have been fully paid or satisfactorily settled. The undersigned further agrees that, if any such claim should hereafter arise, he (it) shall assume responsibility from the same immediately upon request to do so by the CITY OF LIVONIA.

The undersigned, for a valuable consideration, the receipt of which is hereby acknowledged, does waive, release and relinquish any and all claims of right of lien which he (it) now has or may hereafter acquire upon the subject premises for labor and material used in accomplishing said project owned by the said City of Livonia Recreation Department.

This affidavit is freely and voluntarily given with full knowledge of the fact, on this _____day of _____, 20_____.

Subscribed and sworn to before me
on this _____ day of _____,
20_____.

_____
Contractor

By:_____

Title:_____

_____

Notary Public _____County, MI

My Commission Expires:_____

CA

CONTRACT

THIS CONTRACT, entered into this _____day of _____, A.D. 20____, between *CITY OF LIVONIA* RECREATION DEPARTMENT hereinafter referred to as the Owner, party of the first part, and hereinafter referred to as the Contractor, party of the second part.

WITNESSETH, that the said Contractor, for the consideration mentioned in the various items set forth below, by these presents does agree that he will furnish all labor, materials, machinery, tools, and equipment and do all things necessary for and incidental to the

SOUND SYSTEM INSTALLATION AT KIRKSEY RECREATION CENTER

together with appurtenances thereto, as set forth in certain Notice to Bidders, Proposal, General Conditions, Specifications, Bonds, Plans, Drawings, and the following documents, all of which are attached hereto and made a part of this agreement:

IN CONSIDERATION WHEREOF, said Owner does agree to pay to said Contractor the sum of

Dollars ( ), based upon the amounts and sum listed in the Proposal; which is subject, however, to adjustment by reason of any change in, addition to or deduction from the work, as provided in the General Conditions.

For the faithful performance of all and singular terms and stipulations contained in this agreement, said parties respectively bind themselves, their heirs, executors, administrators, successors, and assigns.

IN WITNESS HEREOF, said parties have this day hereunto set their hands and seals, in triplicate.

Witnesses for City of Livonia

_____

_____

OWNER

_____

_____

Witnesses for Contractor:

_____

_____

_____
Contractor

By:_____

_____
Print Name and Title

APPROVED:

_____

_____

APPROVED AS TO FORM:

_____
Department of Law

Meeting was called to order at 8:06 p.m. by Council Vice President Jim Jolly. Present: Vice President Laura Toy, Scott Bahr, Rob Donovic, Scott Morgan, Brandon McCullough. Absent: Kathleen McIntyre

Elected and appointed officials present: Maureen Miller Brosnan, Mayor, Susan Nash, City Clerk, Paul Bernier, City Attorney, Todd Zilincik, City Engineer, LaShawn Thomas, Director of Governmental Affairs, Thomas Goralski Police Chief, Brandie Isaacson, Housing Director, Ted Davis, Superintendent of Parks and Recreation, Jacob Rushlow, Assistant Superintendent of Public Works.

Councilmember Scott Bahr led the Pledge of Allegiance.

10. AWARD OF BID AND REQUEST FOR ADDITIONAL APPROPRIATION: Department of Parks and Recreation, re: for the Underground Utility Mapping at Greenmead Historical Park, from the unexpended fund balance of the Historical Trust Fund and budget transfer in the amount of $23,000 to cover all associated expenses.

    Ted Davis, Superintendent of Parks and Recreation, presented the request to Council.

    Councilmember Scott Bahr offered an approving motion for the Consent agenda.

    Darryl Smith, 14006 14006 Brookfield, asked if the grounds would be graded or added drainage. Council President Jim Jolly stated there is an ongoing Master Plan for Greenmead development.

    DIRECTION: APPROVAL CONSENT

QUOTE PQ-00003428

Livonia Greenmead Utility Tracing

1801 Howard Street Detroit Mi 48216
313-230-0800 www.teamallied.com

Date: July 15, 2022

Attn: Enna Bachelor

CUSTOMER

City Of Livonia
33000 Civic Center Dr
Livonia, MI 48154

LOCATION OF WORK

Greenmead Historical Park
20501 Newburgh Rd
Livonia, MI 48152

SCOPE OF WORK

Labor and Materials to:

-Coordinate with ABSCD throughout the duration of the utility designating portion of the project to obtain permission to access work areas and to ensure the associated SUE services are performed in a timely and cost-effective manner. The utilities to be confirmed are assumed to consist of locating underground water, gas, telephone/communications, sewer, electric, and other utilities, excluding drainage tile and irrigation within the project limits.
-Enter a MISS DIG Design Ticket for the exploration area. NTH will conduct a review of the available utility maps, drawings, and any other available data provided by ABSCD. This information will be evaluated in order to optimize efforts in confirming and/or locating these utilities in the field.
-Appropriate geophysical prospecting methods will be employed to confirm the horizontal locations (SUE QL-B) of the utilities within the project work areas. Selection of the appropriate type of geophysical device will depend on the evaluation of several field related factors, including: 1) the type of utility being surveyed; 2) its depth below the surface; 3) physical surroundings that may cause extraneous interference to particular types of equipment; and, 4) attentive monitoring of the relative success of equipment and methods as they are being employed. Upon detecting the presence of an underground utility, the location will be designated, marked, and recorded by photograph. The utility designating activities will be coordinated with NTH's subcontracted surveyor, who will survey the designated utility locations at the end of field services and enter this data into the established project data collection system.
-Utility line locator and ground penetrating radar (GPR) units will be used to identify the approximate location of the subsurface utilities. Please note that the depth, material type, and condition of the utility being traced will affect the quality of the signal and the effectiveness of the method. As such, non-metallic and deteriorated utilities cannot be traced with line locator and the GPR unit is then used to designate these utilities. If necessary, a sonde will be pushed through open pipes and traced from the ground surface. The use of sonde is limited to relatively short stretches, minimal flow if any, no confined space entry, and advancement and retrieval without jetter or other mechanical means. These methods provide horizontal locations, however they should not be relied upon for accurate vertical information, as per ASCE 38-02. As requested, NTH will provide interpretations of depth from the geophysical equipment for information purposes only. Such information cannot be relied upon for construction and MISS DIG laws will still apply regarding excavations.
-The designated utility alignments will be marked in the field using paint, chalk, wax sticks, wood stakes, and/or pin flags as appropriate. The marked locations will be approximately measured in the field and surveyed. The team surveyor will import the survey data collected in the field into a Civil3D layer to be viewed with Google Earth. Upon completion of survey, the flags/stakes may be removed by the owner, if necessary.
-A brief SUE letter report will be provided to detail the methods and equipment used to perform the SUE services and any relevant information discovered during the exploration.
*Proposal assumes that either no permit will be required from the City of Livonia or that one will be issued without a fee.
*Proposal and work completed under MI Deal.

Total: $35,960.00

TERMS (TO BE DETERMINED)

Price is firm / fixed

A firm fixed price is a fixed price agreed upon by both parties for the scope of work outlined in the proposal.

Pricing is subject to change with a change in scope of work, delays out of control of the contractor or other such items that change the fundamental direction, scope and ability to complete such work.

Regular Straight Time Wages

Regular and Overtime wages DO NOT include any Prevailing Wage, Davis bacon or Service Contract Act wages. If required, pricing will increase.

If you should have any questions, please feel free to call or email me.

Sincerely,

Nicholas Coram
ncoram@teamallied.com
(313) 550-0772

TO ACCEPT THIS PROPOSAL, please sign, date and return it, or you can forward an updated purchase order or work order.

CUSTOMER APPROVAL: _____ Printed Name: _____ Date: _____

PROPOSAL

City of Livonia | Parks and Recreation Department

GPRS

WHAT'S UNDERNEATH MATTERS.

UTILITY LOCATING ■ LEAK DETECTION ■ VIDEO PIPE INSPECTION ■ CONCRETE IMAGING

GPRS is the nation's premier company specializing in the detection of underground utilities and underground storage tanks, video pipe inspection, leak detection and the imaging of concrete structures. Our services enable your projects to stay safe, on time and on budget.

SIM-CERTIFIED FIELD STAFF

Our SIM-Certified Project Managers are equipped with the latest technology, industry leading training and a methodology that has produced over 99.8% accuracy on over 300,000 projects. Visit SIMSPEC.ORG today for details.

NATIONWIDE FOOTPRINT

GPRS is the largest company of our kind. With highly trained Project Managers across America we can provide rapid response to your job site — wherever it may be located.

CONSULTATIVE APPROACH

GPRS Project Managers are trained to help you remove barriers that could impact your project being safe, on time and on budget. They provide industry-leading deliverables such as CAD, 3D drawings, NASSCO reports, and a .KMZ and .PDF map is included with every utility locating project which accelerates planning, organizes operations and increases communication.

IN PURSUIT OF 100% SUBSURFACE DAMAGE PREVENTION™

May 26, 2022

Submitted By:
Matt Johnson
(734) 249-2051
Matt.johnson@gprsinc.com

Client: City of Livonia | Parks and Recreation Department
15100 Hubbard St, Livonia, MI 48154

Attn: Ted Davis - Superintendent of Parks and Recreation
Phone: (734) 466-2298**,** Email: edavis@livonia.gov

Project: Greenmead Historical Park - 20501 Newburgh Rd, Livonia, MI 48152

GPRS appreciates the opportunity to provide this proposal. I encourage you to visit our website (www.gprsinc.com) and contact any of the numerous references listed. Our insurance certificate and W-9 can also be downloaded here. Please feel free to contact me if you have any questions, or if you need additional information. Visit www.simspec.org for an overview of our industry-leading best practices that will be applied to this project.

SCOPE OF WORK

We understand the scope of work for this project is to search for underground utilities throughout a large portion of property at the Greenmead Historical Park located in Livonia, MI. The estimated size of the areas in question is roughly 28 acres in size and identified on the image below. Scans will be performed with both ground penetrating radar and EM technologies throughout the proposed area to search for underground utilities. All GPRS findings will be marked directly onto the surface with marking paint, flagged (If possible), with depths (if obtainable), collected with a handheld GPS, and communicated with the site contact at the time of the survey.

DELIVERABLES

Upon location, subsurface target locations that we detect will be marked directly on the surface with marking paint, flagged (at client's direction) with their depths (if obtainable), and collected with a handheld GPS unit for a basic KMZ deliverable. Additionally, we will overlay our findings onto an existing CAD drawing to be used for future reference. The follow-up drawing will be provided within 5-7 business days following the completion of ALL field work. *Please note, our GPS units are sub-meter accuracy and used as a general reference.*

SCAN REQUIREMENTS / METHODOLOGY

- We recommend the State One Call System (811) be notified and public utilities marked out on the site PRIOR to our arrival. This service is never a replacement for the use of the state One Call system (811).
- The area(s) to be scanned will need to be free of any surface obstructions as much as possible.
- The client will be responsible to provide drawings or notify GPRS of any utilities know to be entering the work area for which there are no apparent surface features or structures that are visible from the work area.
- It is estimated ground penetrating radar will have a maximum scan depth between 3-5 feet deep. GPR is a soil dependent tool and our maximum GPR depth is dependent on soil and site conditions at the time of the survey.
- The wooded areas on the site will have limited to no GPR scan and will rely on EM technologies only to search for utilities.
- Some utilities we locate may or may not be properly identified (located, just don't know exactly what utility was located); therefore, GPRS will mark the located utility in pink and label "unknown" on any drawing deliverable.
- All GPRS technicians have OSHA-10 safety training or greater. Please notify us if this project requires additional training.
- It is our understanding that all work will be completed between normal business hours: Monday-Friday, 8:00a-5:00p.

Please visit www.simspec.org for an overview of our industry-leading best practices that will be applied to this project.

EQUIPMENT

- **Underground Scanning GPR Antenna.** The antenna frequencies range from 250 MHz-450 MHz is mounted in a stroller frame which rolls over the surface. The surface needs to be reasonably smooth and unobstructed in order to obtain readable scans. Obstructions such as curbs, landscaping, and vegetation will limit the feasibility of GPR. The data is displayed on a screen and marked in the field in real time. The total depth achieved can be as much as 8' or more with this antenna but can vary widely depending on the types of materials being scanned through. Some soil types such as clay may limit maximum depths to 3' or less. As depth increases, targets must be larger in order to be detected and non-metallic targets can be especially difficult to locate. Depths provided should always be treated as estimates as their accuracy can be affected by multiple factors. For more information, please visit: Link
- **Electromagnetic Pipe Locator.** The EM locator can passively detect the signals from live AC power or radio signals travelling along some conductive utilities. It can also be used in conjunction with a transmitter to connect directly to accessible, metallic pipes, risers, or tracer wires. A current is sent through the pipe or tracer wire at a specific frequency and the resulting signal can then be detected by the receiver. A utility's ability to be located depends on a variety of factors including access to the utility, conductivity, grounding, interference from other utilities, and many others. Depths provided should always be treated as estimates as their accuracy can be affected by multiple factors. For more information, please visit: Link
- **Traceable Rodder.** The rodder has a copper wire encased in fiberglass. The line is pushed through accessible pipes before placing a current on the wire and the signal is then traced from the surface. The maximum traceable depth is 10' depending on the soil conditions and the maximum distance is 200'. The line can be pushed through a pipe with direct access such as a sewer line at a cleanout or a storm drain catch basin. It may not be able to be pushed through deeper pipes within manholes. Electrical conduits will not be accessed by GPRS. The signal cannot be located through metallic pipes. For more information, please visit: Link
- **GPS.** This handheld GPS unit offers accuracy down to 4 inches, however, the accuracy achieved will depend on the satellite environment at the time of collection and should not be considered to be survey-grade. Features can be collected as points, lines, or areas and then exported as a KML/KMZ or overlaid on a CAD drawing. For more information, please visit: Link

MAPS OF AREA

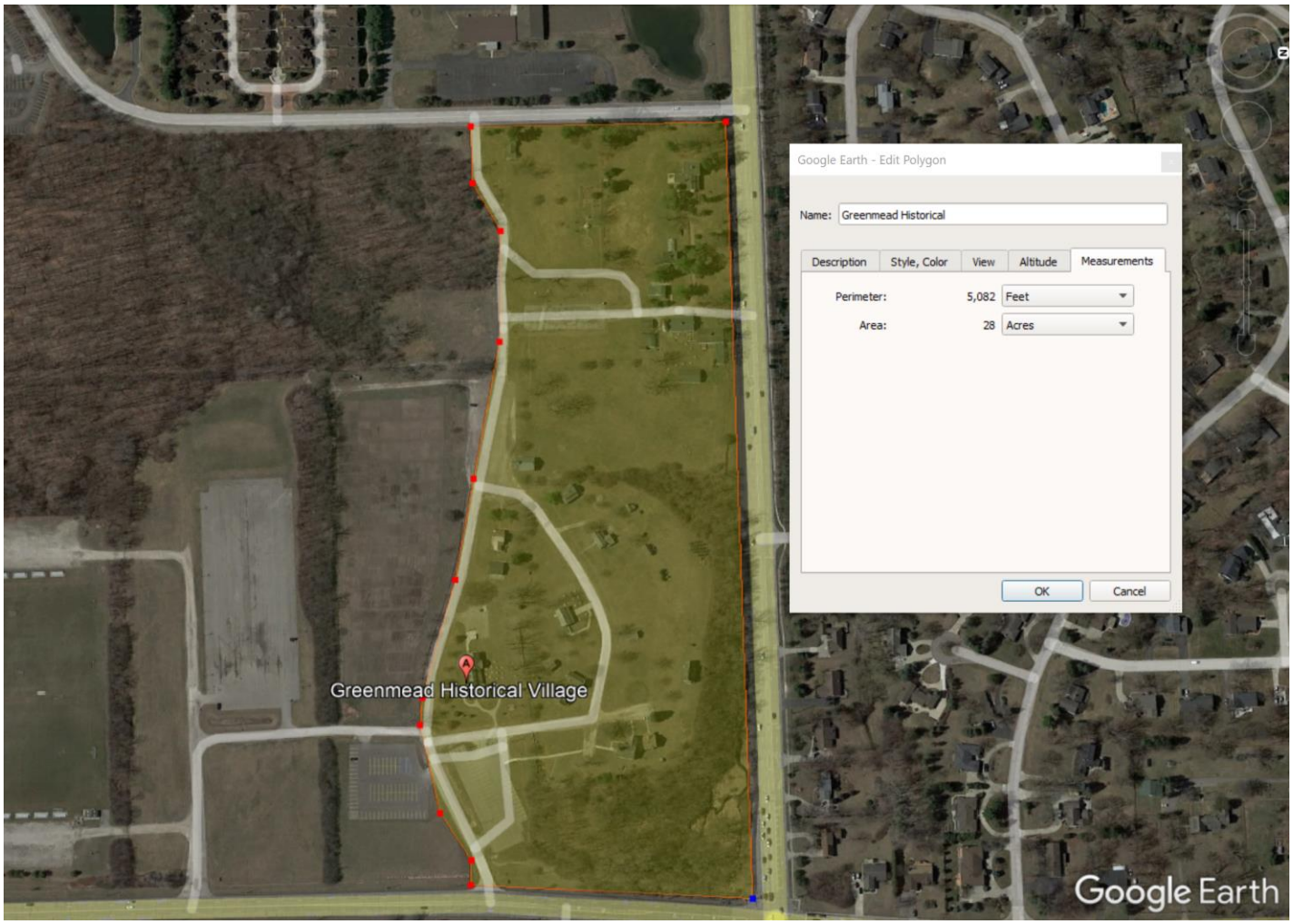

Yellow highlighted area illustrated above indicates the GPRS proposed scan boundaries.

PROJECT COST

SERVICE	DESCRIPTION	PRICE
SCANNING/FIELD MARKINGS/ GPS COLLECTION OF FINDINGS	Use ground penetrating radar and EM technologies to search for underground utilities throughout the area highlighted above – estimated to be 28 acres in size – all GPRS findings will be marked directly on the surface with paint, flagged, and collected with a GPS for KMZ deliverable	$22,650
CAD DRAWING OF UTILITY FINDINGS	Findings collected with GPS and drafted in AutoCAD with an aerial image background. A linework version will also be provided if the client provides an existing drawing. Results are not survey-grade.	Included
MOBILIZATION		Included
TOTAL		***$22,650**

This proposal is subject to the General Terms and Conditions for Services of Ground Penetrating Radar Systems, LLC posted at Link (the "Terms and Conditions") and is hereby incorporated by reference into and made a part of this proposal. Customer acknowledges it has read and agrees to be bound by such Terms and Conditions. In the event of any conflict between the terms of this proposal and the Terms and Conditions, the Terms and Conditions will prevail. Customer also acknowledges that Ground Penetrating Radar Systems, LLC may, from time to time and at its discretion, modify the Terms and Conditions and Customer agrees to be bound by such Terms and Conditions as modified.

PROPOSAL-SPECIFIC TERMS & CONDITIONS

1. Customer agrees to meet and perform all requirements described in this document and has fully read and understands all items listed within this document.
2. It is the customer's responsibility to prepare the site for scanning, including clearly identifying areas to be scanned, securing access to all areas required for scanning, and keeping these areas clear and free of obstructions. Delays caused by customer's failure to do so may result in an increased price.
3. GPRS does not conduct an investigation, analysis, or interpretation of soil composition, soil/concrete conditions, or geophysical, geological, engineering, or land surveying information. Customer acknowledges it understands that we are merely reporting retrieved data and that we do NOT provide geophysical, geological, engineering, or land surveying services. Customer should contact a professional in those fields if such services are needed.
4. If any work to be performed is within a road or street, unless specifically included by GPRS within this proposal, it is the customer's responsibility to provide adequate traffic control to allow GPRS' personnel to safely and efficiently work in the road/street.
5. If this proposal is not accepted within 90 days of the date shown on Page 1 then the pricing may be subject to review.
6. If for some reason the technician arrives on site and the work is cancelled there will be a charge of $500.00 per requested technician.

ACCEPTED AND AGREED:

Billing Company Name: _____

Billing Address: _____

Company Phone/Email: _____ PO#: _____ Job#: _____

Print Name: _____ Signature _____ Date: _____

LETTER TO THE LIVONIA CITY COUNCIL

10.

Parks and Recreation
September 15, 2022

MEETING DATE	PREPARED BY
S092622/R100522	Ted Davis, CPRP, Superintendent of Parks and Recreation,

AGENDA ITEM

AWARD OF BID AND REQUEST FOR ADDITIONAL APPROPRIATION: Department of Parks and Recreation, re: for the Underground Utility Mapping at Greenmead Historical Park, from the unexpended fund balance of the Historical Trust Fund and budget transfer in the amount of $23,000 to cover all associated expenses.

BACKGROUND

The Department of Parks and Recreation has solicited bids to map underground utilities in the historical village and Hill-Simmons Farm complex.

The Department and Purchasing prepared specifications, and an advertisement for bids was placed on the MITN website to solicit interested companies. One company, Allied, submitted a bid for $35,960.00. When initially scoping the project, we received a quote from GPRS for $22,650.00.

RECOMMENDATION

We recommend that the City Council award the project to GPRS, 5217 Monroe Street, Toledo, OH 43623, for an amount not to exceed $22,650.00. Attached for review are their quote and specifications.
We also request an additional appropriation from the unexpended fund balance of the Historical Tru st Fund (270) and a budget amendment to transfer the funds to account no.
101-821-931-020, in the amount of $23,000 to cover all associated expenses.

FISCAL CONSIDERATION

See above.

ATTACHMENTS

1. Allied_Quote_Allied_s_price_proposal_Project_Quote_3428_20220715_0842AM_s3g
2. City of Livonia Parks and Recreation Department- Greenmead Historical Park Project - GPRS Proposal 05.24.2022

APPROVED BY

Michael T Slater

Date: September 15, 2022

Michael Slater, Finance Director

Date: September 16, 2022

Paul Bernier, City Attorney

Maureen Miller Brosnan

Date: September 16, 2022

Maureen Miller Brosnan, Mayor

Meeting was called to order at 8:06 p.m. by Council Vice President Jim Jolly. Present: Vice President Laura Toy, Scott Bahr, Rob Donovic, Scott Morgan, Brandon McCullough. Absent: Kathleen McIntyre

Elected and appointed officials present: Maureen Miller Brosnan, Mayor, Susan Nash, City Clerk, Paul Bernier, City Attorney, Todd Zilincik, City Engineer, LaShawn Thomas, Director of Governmental Affairs, Thomas Goralski Police Chief, Brandie Isaacson, Housing Director, Ted Davis, Superintendent of Parks and Recreation, Jacob Rushlow, Assistant Superintendent of Public Works.

Councilmember Scott Bahr led the Pledge of Allegiance.

11. REQUEST FOR AUTHORIZATION TO PURCHASE ONE 2023 FORD TRANSIT 350 CARGO VAN THROUGH THE STATE OF MICHIGAN AND MACOMB COUNTY BID PROCESS WITH THE UPFITTING THROUGH THE MI-DEAL STATE BID PROCESS; Department of Public Works, re: to replace a vehicle for the primary use by the Water Department, from budgeted funds.

    Jacob Rushlow, Assistant Superintendent of Public Works, presented the request to Council.

    Councilmember Scott Morgan offered an approving motion for the Consent agenda.

    DIRECTION: APPROVAL CONSENT

LETTER TO THE LIVONIA CITY COUNCIL

11.

DPW
September 1, 2022

MEETING DATE	PREPARED BY
S092622/R100522	Jill Russell, Secretary III,

AGENDA ITEM

REQUEST FOR AUTHORIZATION TO PURCHASE ONE 2023 FORD TRANSIT 350 CARGO VAN THROUGH THE STATE OF MICHIGAN AND MACOMB COUNTY BID PROCESS WITH THE UPFITTING THROUGH THE MI-DEAL STATE BID PROCESS; Department of Public Works, re: to replace a vehicle for the primary use by the Water Department, from budgeted funds.

BACKGROUND

The 2021-2022 approved budget includes the purchase of one Transit Van for the Meter section of the Water Department, Department of Public Works. Arrangements were made to incorporate the new vehicle purchase through the State bid process (Contract No. 071B7700180) and Macomb County Contract #21-18, extended purchasing programs made available to local governments through the State of Michigan. The State bid this year was awarded to Signature Ford. The outfitting will be supplied by Versalift Midwest through MI-Deal, contract # 071B7700166 which meets our finance ordinance requirements.

RECOMMENDATION

It is the recommendation of the Department of Public Works that Council approve the purchase of one 2023 Ford Transit Cargo Van from SignatureFord, 1960 E. Main St., Owosso, MI 48867 through the State of Michigan Department of Vehicle Procurement contract #071B7700180 and Macomb County Contract #21-18, at a cost of $51,574.00. We also request Council approve the upfitting of said van through Versalift Midwest, 51761 Danview Technology Ct., Shelby Twp., MI 48315 through the Mi-Deal contract #071B7700166 at a cost of $21,169.00. Total cost of the purchase, including upfitting, will be $72,743.00. This purchase will not increase the size of our fleet. A vehicle that is beyond it's life expectancy will be disposed of through means of a public auction.

FISCAL CONSIDERATION

Funds for this purchase are available in account #592-559-148-000 = $72,743.00

ATTACHMENTS

1. 2023 Ford Transit Van Meters - Veh 431 - Specs and Quotes

APPROVED BY

Date: September 02, 2022

Don Rohraff, Director of Public Works

Date: September 02, 2022

Michael Slater, Finance Director

Date: September 07, 2022

Maureen Miller Brosnan, Mayor

DEPARTMENT OF PUBLIC WORKS
PUBLIC SERVICE DIVISION
FLEET MAINTENANCE

GARY T. GARRISON
FLEET MANAGER

JAMES (BUZZ) KIRBY
FLEET SUPERVISOR

13405 SURREY STREET
LIVONIA, MICHIGAN 48150-1527
(734)-466-2704
FAX: (734)-466-2662

August 10, 2022

Purchase of one 2023 Ford Transit 350 DRW High Roof EL Cargo Van Upfitted to be used by the Water Department Meter Section. The unit number will be #431

I am recommending the purchase of a 2023 Transit 350 van to be used by the meter section of Water Department. The cost of this purchase will be $51,574.00 from Signature Ford, Lincoln, Mercury, 1960 E. Main St. Owosso, MI. 48867.
This purchase will be made through the State of Michigan Department of Vehicle Procurement contract number 071B7700180, and Macomb County Contract # 21-18 Bid. This purchasing process meets our required finance ordinance and provides us with the best possible discounts.

I am also recommending that we use Versalift Midwest, 51761 Danview Technology Ct. Shelby Twp. MI. 48315 to do the upfitting which will include a VMAC air compressor, pure sine power inverter, spray in safety floor liner and shelving throughout. The cost of the upfitting will be $21,169.00. This work will be completed using the MI-Deal contract #071B7700166 for pricing. This contract also meets our required finance ordinance and provides us with the best possible discounts.

The completed cost for this van will be $72,743.00. These funds will come from approved budgeted funds in account 592-559-148-000.

If this purchase is approved, it will not increase the size of our fleet. This van will replace a van that is beyond its life expectancy and can no longer be used as a front-line vehicle. The old van will be disposed of through means of a public auction.

If you have any questions, or require additional information, I can be reached at ext. 2641.

Gary T. Garrison
Fleet Manager

August 5, 2022

City of Livonia DPW
Attn: Gary Garrison
12973 Farmington Road
Livonia, MI 48150

Dear Gary Garrison:

Price on 2023 Vehicle State of Michigan Contract# 071B7700180 and Macomb County Contract# 21-18 Bid:

2023 Ford Transit 350 DRW High Roof EL Cargo Van in White **$51,574.00 ea**

*** Unit #431**

Standard Service Contract: 36,000 miles or 36 months factory Bumper to Bumper Warranty and 60,000miles 60 months Powertrain Warranty . Service to be handled by your local Ford Dealer.

Order Cutoff Date: September 9th, 2022.

Ford Motor Company does not guarantee delivery---Ford Motor Company will make reasonable efforts to schedule orders received prior to fleet order cut-off date.M

Payment requirements: All departments to pay on delivery of vehicle. 10-day grace period will be given if previous arrangements have been made. A $9.50 per day floor plan will be charged if payment is not at the dealership within 10 days of delivery of the vehicle (s).

If you have any questions please call me, 888-92-FLEET (923-5338)

Respectfully Submitted,

Bill Campbell

Bill Campbell
Government & Fleet Sales

1960 E Main St Owosso, MI 48867, 888-92-FLEET (888.923.5338) Fax 517-625-5832

Macomb Co# 21-18-MY 2019 V.4

2021 Transit 350 HD Dual Rear Wheel (DRW) Extended Length (EL) Cargo Van 9,950/10,360 GVWR Major Standard Equipment

POWERTRAIN
- Engine 3.5L PFDi V6 Includes port injection and E-85 Flex-Fuel Capable capability and Auto Start-Stop technology
- Transmission 10-Speed Automatic Overdrive with SelectShift. Auxiliary Transmission Oil Cooler is Standard.

FUNCTIONAL
- Alternator – 250 amp (3.5L PFDi V6 and 3.5L EcoBoost® V6 engines only)
- Horn – Single-note
- Air Conditioning Front only
- Antenna – Fender Mounted
- AM/FM stereo with 4.0" multi-function display, Bluetooth, and Dual USB ports
- Single AGM Battery – 70 amp-hr
- Brakes – 4-wheel Anti-lock Disc Brakes
- Parking Brake
- FordPass™ Connect / Telematics Essentials
- Instrumentation Tachometer, Fuel Level and Coolant Temperature
- PowerPoint – 12V One is located in the instrument panel and one in center console.
- Electric Power Assisted Steering (EPAS)
- Steering Wheel – Power Rack and Pinion
- Steering Wheel – Tilt and Telescoping
- Front – Independent MacPherson-strut, Stabilizer Bar
- Rear – Leaf Springs, Heavy-duty Gas Shock Absorbers

EXTERIOR
- Body Side Moldings – Carbon Black
- Front License Plate Bracket
- Front Bumper – Carbon Black, Body Colored with Lower Valence
- Rear Bumper – Carbon Black, without Integral Step
- 50/50 Hinged Rear Door, 180-degree Opening (Regular Length)
- Sliding Passenger-side Door
- Halogen Headlamps with Autolamp
- Headlamp Courtesy Delay
- Roof Marker Lamps
- Center High Mount Stop Lamp (CHMSL)
- Taillamps
- Auxiliary Fuel Port
- Fuel Tank – Capless Fuel Fill, 25 U.S. gallons (midship)
- Honeycomb Mesh Grille with Carbon Black Surround
- Mirrors, Short-Arm, Power Adjusting, Manual-Folding
- Tires – 195/75R16C 107/105 R BSW all-season RWD
- Tires – 205/75R16C 113/111 R BSW all-season AWD, 11,000lb GVWR or RWD with Heavy Duty Front Axle Configurations only
- Rear Tow Hook
- 16" Silver Steel Wheel with Exposed Lug Nuts (Center Ornaments only come on front wheels)
- Full-size Spare Tire and Wheel
- No Cargo Area Windows
- High-Strength Laminated Glass (Sliding Doors)
- Step Well Pads – Black
- Medium Center Console with integrated shifter and a dual cup holder
- Glove Box – Locking
- Rear Cargo Door – Interior Exit Handle
- Rear Cargo Door – Exterior Lock Cylinder
- Power Equipment Group (Power Locks and Windows) with Remote Keyless-Entry
- Floor Covering Vinyl, Front only
- Rearview Mirror Delete (When Equipped Without Rear Glass)
- Front Dome Lamp with Map Lights and Theater Dimming
- Partial Rear Compartment Lighting (2 LED lights located in C-pillar)
- Accessory Delay – 30 minutes
- Front Overhead Shelf Delete
- A-Pillar Assist Handles (Driver and Passenger-side)
- D-Pillar Weld Nuts
- Headliner – Cloth, Front only
- Seating – Driver and Front-passenger Manual Reclining Bucket Seats with Adjustable Headrest (Includes driver-side and passenger-side inboard armrest)
- Sunvisors

SAFETY/SECURITY
- Autolocking Drive Away with Crash Unlocking. .
- AdvanceTrac® w/Roll Stability Control™ (RSC®)
- Safety Belts – 3-point, All Positions

Note: Belt minder is included on the driver and front passenger seat(s).
- SecuriLock® Passive Anti-Theft System (PATS) with engine immobilizer
- SOS Post-Crash Alert System
- Tire Pressure Monitoring System (TPMS). Standard on SRW and DRW configurations.
- Driver and Passenger Airbags
- Passenger-side Airbag Cut-off Switch. Not available with Passenger Seat Delete (21J, 21K and 211) or Right Hand Door Delete (60X) configurations
- Safety Canopy® Side-curtain Airbags

CO-PILOT350 TECHNOLOGY
- Forward Collison Warning
- Hill Start Assist
- Post-Collision Braking

Note: Can potentially lessen the severity of a secondary collision by automatically applying moderate brake pressure when an initial collision event is detected.
- Side Wind Stabilization
- Pre-Collision with Automatically Emergency Braking

Note: If a potential collision is detected, a warning flashes and an alert sound, and if the driver's response is not sufficient, the system can automatically apply the brakes to help minimize a frontal collision.
- Lane-Keeping System

Note: Includes Lane-Keeping Alert and Driver Alert. This feature can alert the driver, during day or night, if their vehicle is unintentionally leaving its intended lane.
- Auto High-Beam Headlamps
- Rear View Camera with Trailer Hitch Assist.

Note: Camera will be high-mount for Medium Roof and High Roof.
- Automatic Rain-Sensing Windshield Wipers

Option Included in Base Price: Front and Rear Vinyl Floor Covering (16E) and Rear Step Bumper (43E)

Base Prices High Roof (109.4"), 9,950# GVWR

[ ] **Transit 350 DRW EL** (F4X/101A) 148" Wheelbase (V.4)	**$47,979.00**
[ ] **Transit 350 DRW EL All-Wheel Drive** (F4U/101A) 148" Wheelbase	**$52,568.00**

Base Prices High Roof (109.4"), 10,360# GVWR

[x] **Transit 350 DRW EL** (S4X/101A) 148" Wheelbase	**$48,294.00**
[ ] **Transit 350 DRW EL All-Wheel Drive** (S4U/101A) 148" Wheelbase (3.5L EcoBoost)	**$54,191.00**

Base Prices High Roof (109.4"), 11,000# GVWR

[ ] **Transit 350 DRW EL** (U8X/101A) 148" Wheelbase	**$50,094.00**
[ ] **Transit 350 DRW EL All-Wheel Drive** (U8U/101A) 148" Wheelbase (3.5L EcoBoost)	**$55,291.00**

Available Options	Code	Price
[ ] 3.5L EcoBoost V-6 Engine	99G/44U	1775.00
[ ] Vehicle Maintenance Monitor	61C	45.00
[ ] Heater, Engine Block	41H	75.00
[ ] Axle, Limited Slip	X_L	325.00
[ ] Dual Batteries 70 amp-hr (ea)	63E	295.00
[ ] Dual Batteries 70 amp-hr (ea) and Dual Alternators 250 Amps (ea) **(Available only with 3.5L Eco Boost Engine)**	63E/63C	1320.00
[x] Seats Cloth, 2-way manual driver and Passenger Seats	**21L/21M**	**115.00**
[ ] Seats Cloth 10-way power Heated Driver and Passenger Seats	21Q/21R	990.00
[ ] Heavy Duty Front Axle (Standard on All-Wheel Drive)	41E	315.00
[ ] Front Fog Lamps	55D	105.00
[ ] Perimeter Anti-Theft Alarm	59D	155.00
[ ] Daytime Running Lights	942	45.00
[ ] License Plate Bracket Front	153	N/C
[x] Short Arm Manual Folding Power Heated with Turn Signals	**545**	**160.00**
[ ] Long Arm Non Telescoping Mirrors-Power	543	65.00
[ ] Long Arm Non Telescoping Mirrors-Power Heated with Turn Signals	544	220.00
[x] Trailer Tow Package-Heavy Duty	**53B**	**485.00**
[ ] Integrated Trailer Brake Controller (Inc.Trailer Tow Pkg. & Cruise)	67D/53B/60C	1215.00
[x] Back Up Alarm	**43B**	**150.00**
[x] Keyless-Entry Pad	**52C**	**95.00**
[x] Remote Start.	**68B**	**495.00**
[x] 50/50 Hinged Rear Door 253-degree Opening (148" Wheelbase)	**18P**	**75.00**
[ ] 60/40 Hinged Passenger Side Door **(Low Roof Only)**	59A	N/C
[ ] Glass, Fixed Rear-Door	17A	250.00
[ ] Glass, Fixed Passeneger Side/Fixed Rear-Door	17B	425.00
[x] Windows-All-Around, fixed	**17F**	**625.00**
[ ] Air Conditioning Front/Rear (Driver controlled). **(Not Available with Rear Vinyl, Packages 96D & 96C)**	57G	860.00
[ ] AM/FM Stereo, Bluetooth, Dual USB Ports, SYNC3, and a 4.0 inch Multi-Function display	58V	280.00
[ ] SYNC 4 with 12-inch Display	58B/61E	930.00
[ ] SYNC 4 with Sirius XM with 360L, HD Radio, & 12-inch Display	58C/61E	1165.00
[ ] SYNC 4 with Sirius XM with 360L, HD Radio, Navigation Cruise Control & 12-inch Display	58E/61E/60C	1780.00
[ ] SYNC 4 with Sirius XM with 360L, HD Radio, Navigation Intelligent Adaptive Cruise Control & 12-inch Display	58F/61E	2050.00
[ ] Cruise Control	60C	325.00
[ ] Dual-Note Horn	85D	20.00
[ ] Full Rear Compartment Lighting	15F	75.00

[ ]	Cargo Tie-Down Hooks (6 Tie-Down Hooks)	17P	25.00
[ ]	**Heavy Duty Cargo Flooring and Heavy Duty Scuff Plate Kit (Not Available w/Rear Air Conditioning)**	**60B**	**875.00**
[x]	**Upfitter Package** (High Capacity Upfitter Switches, Large Center Console, Auxiliary Fuse Panel with High Spec Interface Connector, Dual AGM Batteries (63E), and Modified Vehicle Wiring System (53K)	**67C**	**610.00**
[x]	**Load Area Protection Package** (Full Height Polypropylene Cargo area panels)	**96D**	**395.00**
[ ]	**Exterior Upgrade Package** (Chrome-trimmed, HID Headlamps, Wiper Activated Headlamps, Honeycomb Mesh Grill with Chrome Surround, and 16" Steel Wheel	**18D**	**535.00**
[ ]	**Interior Upgrade Package** (Cruise control, Vinyl Front and Rear Flooring, Vinyl Sunvisor Illuminated Vanity Mirror, Cloth driver and passenger Seats (21L/21M), and Full Height Polypropylene Cargo area panels.)	**96C**	**1435.00**
[ ]	Vinyl Sun Visors with Illuminated Vanity Mirror	85C	75.00
[x]	**(2) Additional Keys w/FOBS**	**86F**	**75.00**
[ ]	Power Outlet 110V/400W	90D	475.00
[ ]	Power Point – 12V rear	87A	15.00
[ ]	Reverse Sensing System	43R	295.00
[ ]	Blind Spot Assist 1.0	65A/58B	1725.00
[ ]	Bulkhead with Lockable Door **(Medium and High Roof Only)**	47T	1395.00

Total Price $51,574.00 ea

Colors for Transit 350 Cargo Van

Solid	**Interior Colors**		
Exterior Colors	**Pewter (VK/CK)**		**Charcoal (CB) (Cloth Only)**
School Bus Yellow	[BY]	[ ]	[ ]
Race Red	[PQ]	[ ]	[ ]
Oxford White	**[YZ]**	**[x]**	[ ]
Extra Cost Paint (add $200.00)			
Agate Black Metallic	[UM]	[ ]	[ ]
Ingot Silver	[UX]	[ ]	[ ]
Carbonized Gray Metallic	[M7]	[ ]	[ ]
Blue Metallic	[FT]	[ ]	[ ]
Avalanche Gray Metallic	[DR]	[ ]	[ ]
Abyss Gray Metallic	[ME]	[ ]	[ ]
Blue Mist	[MT]	[ ]	[ ]

VERSALIFT MIDWEST, LLC
51761 Danview Technology Ct.
Shelby Twp, MI 48315
Ph: (586) 991-0054
Fx: (586) 991-0074

QUOTATION

Quote No. J35077

STATE REG NO: F151568
DEALER LICENSE NUMBER: B6542

Customer: 1552
CITY OF LIVONIA
PUBLIC SER-EQUIP MAINT.
13405 SURREY
LIVONIA MI 48150

08/05/22: Quote Date
09/04/22: Expire Date
N30: Terms
: Delivery

Contact: GARY Phone: 734-466-2641 Fax: 734-466-2662

FURNISH AND INSTALL:
MI-DEAL CONTRACT #071B7700166

TRUCK #431

1) S1M2C2PM-AS
Adrian Steel-Steel Partition Panel Kit w/ Visibility, Gray,

1) WKC1FDTH-AS
Adrian Steel-Steel Partition Mounting Kit, Gray, Transit High Roof

1) PDK1-AS
Adrian Steel-Steel Partition Hinged Door Kit, Black

1) MD509-AS
Adrian Steel-Workbench Module, 42w x 31h x 18d, Gray

3) 1-AS
Adrian Steel-Adjustable Single Shelf Cabinet w/ Lock, 18w x 22h x 18d,Gray

2) 1A-AS
Adrian Steel-Cabinet Shelf for #1, 17w x 0.8h x 17.5d, Gray

2) UH50-AS Adrian Steel-Utility Hook Kit, 5'', Gray

1) ACT4-AS
Adrian Steel-4-Place Aerosol Can Holder, 15.5w x 6.8h x 4d, Gray

2) HD5059-AS Adrian Steel-4-Shelf Unit, 50w x 59h x 14d, Gray

1) HD3259-AS Adrian Steel-4-Shelf Unit, 32w x 59h x 14d, Gray-(0.75)

1) 1050-FS-RGD
Ranger Design-Access Pro, aluminum interior ladder carrier, 96" long-(1)

1) Bolt plywood to the back of shelving units

1) Spray line floor

*** CONTINUED NEXT PAGE ***

VERSALIFT MIDWEST, LLC
51761 Danview Technology Ct.
Shelby Twp, MI 48315
Ph: (586) 991-0054
Fx: (586) 991-0074

QUOTATION

Quote No. J35077

STATE REG NO: F151568
DEALER LICENSE NUMBER: B6542

Customer: 1552
CITY OF LIVONIA
PUBLIC SER-EQUIP MAINT.
13405 SURREY
LIVONIA MI 48150

08/05/22: Quote Date
09/04/22: Expire Date
N30: Terms
: Delivery

Contact: GARY Phone: 734-466-2641 Fax: 734-466-2662

1) 3000 Watt pure sine power invertor

1) VMAC MODEL VR LITE UNDERHOOD AIR COMPRESSOR
-APPLICATION - 3.7L GAS, FORD TRANSIT
-BELT DRIVEN ROTARY SCREW AIR COMPRESSOR
-MULTI GROOVE ELECTRIC CLUTCH AND COMPRESSOR
-REMOTE LIQUID-TO-LIQUID HEAT EXCHANGER
-VARIABLE SPEED CONTROL
-6 GAL AIR RECEIVER TANK
-3/8" X 50' HOSE REEL
-COMPLETE INSTALLATION

1) 200 HOUR SERVICE KIT - VR40

TOTAL ABOVE..... $ 21,169.00

THANK YOU,
CURT ANDERSON

QUOTE ACCEPTED AS AN ORDER_____DATE_____TRUCK INFO:_____

GOODS ARE SOLD ONLY WITH SUCH WARRANTIES AS MAY BE EXTENDED BY MANUFACTURER OF THE PRODUCT. WE MAKE NO OTHER WARRANTY & THERE ARE NO IMPLIED WARRANTIES OF MERCHANTABILITY. SALES TAX NOT INCLUDED IN ABOVE PRICE.

Meeting was called to order at 8:06 p.m. by Council Vice President Jim Jolly. Present: Vice President Laura Toy, Scott Bahr, Rob Donovic, Scott Morgan, Brandon McCullough. Absent: Kathleen McIntyre

Elected and appointed officials present: Maureen Miller Brosnan, Mayor, Susan Nash, City Clerk, Paul Bernier, City Attorney, Todd Zilincik, City Engineer, LaShawn Thomas, Director of Governmental Affairs, Thomas Goralski Police Chief, Brandie Isaacson, Housing Director, Ted Davis, Superintendent of Parks and Recreation, Jacob Rushlow, Assistant Superintendent of Public Works.

Councilmember Scott Bahr led the Pledge of Allegiance.

12. REQUEST TO AMEND THE ENGINEERING CONTRACT THROUGH THE QUALIFICATION BASED SELECTION (QBS) PROCESS WITH OHM ADVISORS AND AUTHORIZE EXPENDITURE: Department of Public Works, re: for the Drinking Water Asset Management Grant (DWAM), from budgeted funds, to be reimbursed from the DWAM grant. (CR 365-16)

    Jacob Rushlow, Assistant Superintendent of Public Works, presented the request to Council.

    Councilmember Rob Donovic stated how important the grant is and felt OHM does a great job, he then offered an approving motion for the Consent agenda.

    DIRECTION: APPROVAL CONSENT

LETTER TO THE LIVONIA CITY COUNCIL

12.

DPW
September 15, 2022

MEETING DATE	PREPARED BY
S092622/R100522	Jill Russell, Secretary III,

AGENDA ITEM

REQUEST TO AMEND THE ENGINEERING CONTRACT THROUGH THE QUALIFICATION BASED SELECTION (QBS) PROCESS WITH OHM ADVISORS AND AUTHORIZE EXPENDITURE: Department of Public Works, re: for the Drinking Water Asset Management Grant (DWAM), from budgeted funds, to be reimbursed from the DWAM grant. (CR 336-21)

BACKGROUND

The Department, with assistance from OHM Advisors, successfully applied for and received a Drinking Water Asset Management (DWAM) Grant from the Michigan Department of Environment, Great Lakes, and Energy (EGLE) totaling $425,900. These grant monies are intended for asset management plan updates and water service line distribution system materials inventory (DSMI), which is required to be conducted by the Department through the revised Lead and Copper rules. The DSMI requires a physical verification by excavation to be completed in 381 randomized locations within the City. Due to the efforts needed to collect this information, we plan to seek bids from contractors to perform the physical verification work.

To assist the Department with this task, OHM would be responsible for preparing contract documents for bidding to acquire a contractor's services, and assist with public education, scheduling, and data collection. OHM has prepared the attached proposal and contract amendment exhibits for these services.

RECOMMENDATION

Authorize the Mayor and the City Clerk to execute an amendment to the Engineering contract with OHM Advisors, 34000 Plymouth Road, Livonia, Michigan 48150 in the amount of $57,900 and authorize an expenditure in this amount from budgeted funds in account no. 592-559-818-000, to be reimbursed from the DWAM grant.

FISCAL CONSIDERATION

Budgeted funds available in account no. 592-559-818-000 in the amount of $57,900

ATTACHMENTS

1. DWAM OHM Scope Package
2. Executed_DWAM_Agreement_City of Livonia
3. R112221 Approval for prof eng svcs CR 336-21

APPROVED BY

Jacob Rushlow, P.E., Assistant Director of Public Works

Date: September 15, 2022

Don Rohraff, Director of Public Works

Date: September 15, 2022

Michael Slater, Finance Director

Date: September 16, 2022

Maureen Miller Brosnan, Mayor

Date: September 16, 2022

ARCHITECTS. ENGINEERS. PLANNERS.

OHM Advancing Communities℠

September 6, 2022

Jacob Rushlow, P.E.
Assistant Director of Public Works
33000 Civic Center Dr.
Livonia, MI 48154

Regarding: Drinking Water Asset Management Grant
Proposal for Engineering Services

Dear Mr. Rushlow:

The City, with OHM Advisor's assistance, successfully completed the Drinking Water Asset Management (DWAM) Grant applications. The DWAM Grant provides funding for the water service line material exploration on three hundred eighty-one (381) randomly selected water service lines.

It is our understanding the City would like OHM's assistance in completing the necessary steps to gather water service line materials located inside the selected parcel's structure. We have worked with City staff to define the schedule for completing the tasks layout out here within. Based on that effort, we have prepared the attached Scope of Services, Schedule and Proposed Fees to assist the City with the effort necessary to complete tasks required as part of the grant. We have based our proposal on the terms and conditions of the current Professional Services agreement. The proposed project Supplements (A-C) for this project are included.

We appreciate this opportunity to provide professional services to the City and look forward to executing the plan that allows the City help ensure compliance with the revised Lead & Copper rule requirements.

Sincerely,
OHM Advisors

Jessica Katers

Jessica Katers, PE
Project Manager

CC: Don Rohraff, Director of Public Works
Nolan Pacitto, PE, OHM

OHM Advisors
34000 PLYMOUTH ROAD
LIVONIA, MICHIGAN 48150
T 734.522.6711
F 734.522.6427
OHM-Advisors.com

CITY OF LIVONIA

DRINKING WATER ASSET MANAGEMENT GRANT

PROJECT UNDERSTANDING

The CITY has been awarded a Drinking Water Asset Management (DWAM) Grant from the department of Environment, Great Lakes, and Energy (EGLE). Under this grant the City of Livonia is required to field verify the material of 381 randomly selected water service lines. Per grant requirements, material inspections are to be completed at three (3) locations along the water service line. One inspection will occur where the water service enters the structure, a second inspection on the private side of the curb stop box, and the third inspection on the public side of the curb stop box. Inspections on both sides of the curb stop box will be completed by a contractor using methods such as hydro-excavation.

CONSULTANT will work with the CITY to update the City of Livonia's geographic information system (GIS) with any existing water service line information that is currently not in the City's GIS. CONSULTANT will establish criteria based on Grant requirements for which water services will be included in the random selection.

CONSULTANT will perform random selection of the 381 services to be inspected. CONSULTANT will prepare informative flyer detailing the project scope, updates to the Lead and Copper Rule (LCR) requirements, and how to schedule appointments for service line inspections inside the structure. These flyers will be distributed to the randomly selected parcels.

CONSULTANT will then prepare contract documents for the acquisition of a hydro-excavation contractor to perform inspections on the public and private side of the curb stop box for the 381 randomly selected services.

During inspections, water service line material information will be collected and stored in a GIS based application.

The project will be broken up into two (2) phases. Phase I will cover the grant application, contract preparation, generation of randomized service selection and development of public education tools. Phase II will cover water service line material investigations, contract administration, and incorporation of investigation results into the City's GIS. This proposal covers the tasks necessary to complete Phase I. A separate proposal to cover Phase II tasks will be provided at the completion of Phase I. Specific tasks to complete Phase I of this project are as follows:

WORK PLAN

A. Grant Application

1. Under this task, the City, with assistance from OHM Advisors, completed and was awarded an EGLE DWAM Grant tot assist in the exploration of service line materials throughout the City.

B. System Evaluation

1. Work with the City's GIS team to incorporate existing water service line material information into their GIS.
2. Update the City's existing water service line material GIS based dashboard to incorporate additional data collection fields that are required per DWAM Grant requirements.
3. Generate a list of possible water services to be included in the random selection per criteria set by EGLE.
4. Perform random selection of service lines per DWAM grant requirements to determine which service lines are to be investigated. This selection will be based on the current water service material status as listed in the GIS.

C. Public Education

1. Prepare a draft of an informative flyer to distribute to residents prior to on-site material investigations. The flyer will include information regarding the updates to the LCR, responsibility of the City and the property owner, upcoming investigations and how to coordinate activities, links to online informative sites. A draft of the flyer will be provided to the City for review and finalized based on City comments.
2. Create an online calendar for residents to schedule their water service line inspection inside their structure.
3. Creation of webpage data accessible by the public. The webpage would utilize an ArcGIS StoryMap format. This format allows for easy consumption and reference of relevant public information as stated above. It would also include an online map that can be updated as the project starts and progress is made, i.e., updates of service line materials as they are discovered.

D. Contract Preparation

1. Develop contract documents to use for bidding the water service line evaluations at the public and private side of the curb stop box.
2. Advertise the project, and answer contractor questions during the bidding process. Issuing any addendums, as needed.
3. Bid the project, attend the bid opening, and develop a bid tabulation.
4. Check low bid qualifications and provide a recommendation of award to the City Council.
5. Upon approval by the City Council, assist the City with executing contracts.

City's Responsibilities

A. Provide OHM with most accurate source of water service installation date.

B. Handle and scheduled related communications with water service line customers selected to participate.

C. Complete interior inspection portion of the required inspection points.
   a. Collect water service line material data in GIS based dashboard during interior inspections.

D. Host a public information meeting with residents, as needed.

CITY OF LIVONIA

DRINKING WATER ASSET MANAGEMENT GRANT

CONSULTANT shall provide services for the Phases and Tasks outline on Supplement A according to the approximate timeframe below.

Key dates are shown in the following schedule:

Milestone	Date
Grant Application	Complete
Authorization	September 2022
GIS Updates	November 2022
Randomized Selection	November 2022
Public Education	December 2023
Bidding Advertisement	February 2023
Bid Opening	March 2023

Detailed schedules for construction will be developed during the Phase II. It is anticipated that inspections at the curb stop box would generally begin in April 2023 and be substantially completed in April 2024, with minor restoration items to be completed by July 2024.

CITY OF LIVONIA

2023 WATER MAIN REPLACEMENT PROJECT

Phase I

The CITY agrees to pay the CONSULTANT on an hourly basis, billed monthly, per the 2022 Rate Schedule at the not-to-exceed amount of fifty-seven thousand nine hundred dollars and zero cents ($57,900).

Additional Services

Additional services, if approved by City Council, shall be paid at the current hourly rate schedule or at an agreed upon price between the CITY and CONSULTANT.

Notes

- Invoices shall be submitted monthly.
- 2022 Hourly Rate Schedule is attached for reference.

OHM Advancing Communities

OHM ADVISORS
2022 HOURLY RATE SCHEDULE

Professional Engineer IV / Architect IV / Senior Interior Designer IV	$188.00
Professional Engineer III / Architect III / Senior Interior Designer III	$170.00
Professional Engineer II / Architect II / Senior Interior Designer II	$155.00
Professional Engineer I / Architect I / Senior Interior Designer I	$145.00
Project Specialist II	$160.00
Project Specialist I	$130.00
Graduate Engineer IV	$145.00
Graduate Engineer III	$140.00
Graduate Engineer II	$135.00
Graduate Engineer I	$125.00
Graduate Architect III / Landscape Architect III / Interior Designer III	$138.00
Graduate Architect II / Landscape Architect II / Interior Designer II	$115.00
Graduate Architect I / Landscape Architect I / Interior Designer I	$105.00
Technician IV	$143.00
Technician III	$125.00
Technician II	$108.00
Technician I	$87.00
Engineering / Architectural / Interior Design Aide	$70.00
Professional Surveyor III	$162.00
Professional Surveyor II	$150.00
Professional Surveyor I	$135.00
Graduate Surveyor	$120.00
Surveyor III	$120.00
Surveyor II	$110.00
Surveyor I	$90.00
Surveyor Aide	$70.00
Planner IV	$160.00
Planner III	$144.00
Planner II	$120.00
Planner I	$105.00
Planner Aide	$70.00
Graphic Designer	$110.00
Administrative Support	$80.00
Clerical Aide	$68.00
Principal	$215.00
Sr. Associate	$198.00
Associate	$187.00

Rates as reflected subject to review and adjustment on an annual basis.
2022 Public Rates

EXHIBIT A

PROJECT SPECIFIC SCOPE OF SERVICES, PROJECT SCHEDULE, PAYMENTS TO CONSULTANT

The information contained in this Exhibit applies only to the following project:

Project Title:
Drinking Water Asset Management Grant

Dated:_____, 2022

This is an Exhibit to the Professional Services Contract dated September 6, 2022 between the City of Livonia, and Orchard, Hiltz & McCliment, Inc. (OHM Advisors), whose address is 34000 Plymouth Road, Livonia, MI 48150.

This Exhibit acts as a duly executed written instrument that amends, supplements, modifies, or cancels certain portions of the contract, as provided in Article 8.01 of the contract.

A. SCOPE OF SERVICES

CONSULTANT is requested to provide Engineering and GIS Services for the DWAM Grant in accordance with attached Supplement A, dated September 6, 2022.

B. PROJECT SCHEDULE

The Project Schedule is attached as Supplement B, dated September 6, 2022.

C. PAYMENTS TO CONSULTANT

CONSULTANT shall be paid on an hourly basis up to an amount not-to-exceed fifty-seven thousand nine hundred dollars and zero cents ($57,900) in accordance with the tasks and payment terms on Supplement C, dated September 6, 2022.

In Witness Whereof, the City and Consultant, by and through their duly authorized officers and representatives, have executed this Contract.

In the Presence of:

CITY OF LIVONIA, a Michigan Municipal Corporation

_____

By:_____
Maureen Miller Brosnan, Mayor

_____

By:_____
Susan M. Nash, City Clerk

In the Presence of:

OHM Advisors

_____

By:_____
Jessica Katers, PE

Its: Principal

Approved:

_____
Donald R. Rohraff
Director of Public Works

Approved:

_____
Jacob Rushlow, PE
Assistant Director of Public Works

Pursuant to Council Resolution

Approved:

No.:_____

_____
Michael Slater
Director of Finance

Adopted on:_____

Approved:

_____
Paul A. Bernier
Department of Law

DRINKING WATER ASSET MANAGMENT GRANT AGREEMENT
BETWEEN THE
MICHIGAN DEPARTMENT OF ENVIRONMENT, GREAT LAKES, AND ENERGY
AND **CITY OF LIVONIA**

This Grant Agreement ("Agreement") is made between the Michigan Department of Environment, Great Lakes, and Energy (EGLE), Finance Division ("State"), and **City of Livonia** ("Grantee").

The purpose of this Agreement is to provide funding in exchange for work to be performed for the project named below. The State is authorized to provide grant assistance pursuant to Public Act 57 of 2019. This Agreement is subject to the terms and conditions specified herein.

Project Name: AMP/DSMI
Project #: DW-065
Amount of grant: $425,900
State Funding: 100% of grant
Amount of match: None required
PROJECT TOTAL: $425,900
Start Date: 10/15/2020
End Date: 11/15/2024

GRANTEE CONTACT:	**STATE'S CONTACT:**
Jacob Rushlow, Superintendent of Public Service	Kaitlyn Thrush, Departmental Analyst
Name/Title	Name/Title
City of Livonia	Finance Division
Organization	Division/Bureau/Office
12973 Farmington Road	525 W Allegan Street
Address	Address
Livonia, MI 48150	Lansing, MI 48909
Address	Address
734-466-2606	517-647-3482
Telephone number	Telephone number
jrushlow@livonia.gov	ThrushK1@michigan.gov
E-mail address	E-mail address
CV0048185	
SIGMA Vendor Number	

The individuals signing below certify by their signatures that they are authorized to sign this Agreement on behalf of their agencies and that the parties will fulfill the terms of this Agreement, including any attached appendices, as set forth herein.

FOR THE GRANTEE:

Signature — Date: 2021-11-09 10:15:37 UTC

Jacob Rushlow, Superintendent of Public Service
Name/Title

FOR THE STATE:

Signature — Date: 2021-11-09 10:58:32 UTC

Kelly Green, Administrator
Name/Title

I. PROJECT SCOPE

This Agreement and its appendices constitute the entire Agreement between the State and the Grantee and may be modified only by written agreement between the State and the Grantee.

(A) The scope of this project is limited to the activities specified in Appendix A and such activities as are authorized by the State under this Agreement. Any change in project scope requires prior written approval in accordance with Section III, Changes, in this Agreement.

(B) By acceptance of this Agreement, the Grantee commits to complete the project identified in Appendix A within the time period allowed for in this Agreement and in accordance with the terms and conditions of this Agreement.

II. AGREEMENT PERIOD

Upon signature by the State, the Agreement shall be effective from the Start Date until the End Date on page 1. The State shall have no responsibility to provide funding to the Grantee for project work performed except between the Start Date and the End Date specified on page 1. Expenditures made by the Grantee prior to the Start Date or after the End Date of this Agreement are not eligible for payment under this Agreement.

III. CHANGES

Any changes to this Agreement shall be requested by the Grantee or the State in writing and implemented only upon approval in writing by the State. The State reserves the right to deny requests for changes to the Agreement or to the appendices. No changes can be implemented without approval by the State.

IV. GRANTEE DELIVERABLES AND REPORTING REQUIREMENTS

The Grantee shall submit deliverables and follow reporting requirements specified in Appendix A of this Agreement.

(A) The Grantee must complete and submit financial and progress reports according to a form and format prescribed by the State and must include supporting documentation of eligible project expenses. These reports shall be submitted via the Financial Status Report Form as provided by EGLE, and due according to the following:

Reporting Period	Due Date
Jan 1 – Jan 31	Feb 28
Feb 1 – Feb 28	Mar 31
Mar 1 – Mar 31	April 30
April 1 – April 30	May 31
May 1 – May 31	June 30
June 1 – June 30	July 31
July 1 – July 31	Aug 31
Aug 1 – Aug 31	Sept 30
Sept 1 – Sept 30	Before October 15*
Oct 1 – Oct 31	Nov 30
Nov 1 – Nov 30	Dec 31
Dec 1 – Dec 31	Jan 31

*****Due to the State's year-end closing procedures, there will be an accelerated due date for the report covering September 1 – September 30. Advance notification regarding the due date for the period

ending September 30 will be sent to the Grantee. If the Grantee is unable to submit a report in early October for the month ending September 30, an estimate of expenditures through September 30 must be submitted to allow the State to complete its accounting for that fiscal year.

The forms provided by the State shall be submitted to the State's contact at the address on page 1. All required supporting documentation (invoices, proof of payment, etc.) for expenses must be included with the report.

(B) The Grantee shall provide a final project report in a format prescribed by the State. The Grantee shall submit the final status report, including all supporting documentation for expenses, along with the final project report and any other outstanding products within 30 days of substantial completion of the project or the End Date of the Agreement.

V. GRANTEE RESPONSIBILITIES

(A) The Grantee agrees to abide by all applicable local, state, and federal laws, rules, ordinances, and regulations in the performance of this grant.

(B) All local, state, and federal permits, if required, are the responsibility of the Grantee. Award of this grant is not a guarantee of permit approval by the State.

(C) The Grantee shall be solely responsible to pay all applicable taxes and fees, if any, that arise from the Grantee's receipt or execution of this grant.

(D) The Grantee is responsible for the professional quality, technical accuracy, timely completion, and coordination of all designs, drawings, specifications, reports, and other services submitted to the State under this Agreement. The Grantee shall, without additional compensation, correct or revise any errors, omissions, or other deficiencies in drawings, designs, specifications, reports, or other services.

(E) The State's approval of drawings, designs, specifications, reports, and incidental work or materials furnished hereunder shall not in any way relieve the Grantee of responsibility for the technical adequacy of the work. The State's review, approval, acceptance, or payment for any of the services shall not be construed as a waiver of any rights under this Agreement or of any cause of action arising out of the performance of this Agreement.

(F) The Grantee acknowledges that it is a crime to knowingly and willingly file false information with the State for the purpose of obtaining this Agreement or any payment under the Agreement, and that any such filing may subject the Grantee, its agents, and/or employees to criminal and civil prosecution and/or termination of the grant.

VI. USE OF MATERIAL

Unless otherwise specified in this Agreement, the Grantee may release information or material developed under this Agreement, provided it is acknowledged that the State funded all or a portion of its development.

The State, and federal awarding agency, if applicable, retains a royalty-free, nonexclusive and irrevocable right to reproduce, publish, and use in whole or in part, and authorize others to do so, any copyrightable material or research data submitted under this grant whether or not the material is copyrighted by the Grantee or another person. The Grantee will only submit materials that the State can use in accordance with this paragraph.

VII. ASSIGNABILITY

The Grantee shall not assign this Agreement or assign or delegate any of its duties or obligations under this Agreement to any other party without the prior written consent of the State. The State does not assume responsibility regarding the contractual relationships between the Grantee and any subcontractor.

VIII. SUBCONTRACTS

The State reserves the right to deny the use of any consultant, contractor, associate, or other personnel to perform any portion of the project. The Grantee is solely responsible for all contractual activities performed under this Agreement. Further, the State will consider the Grantee to be the sole point of contact with regard to contractual matters, including payment of any and all charges resulting from the anticipated Grant. All subcontractors used by the Grantee in performing the project shall be subject to the provisions of this Agreement and shall be qualified to perform the duties required.

IX. NON-DISCRIMINATION

The Grantee shall comply with the Elliott Larsen Civil Rights Act, 1976 PA 453, as amended, MCL 37.2101 *et seq.*, the Persons with Disabilities Civil Rights Act, 1976 PA 220, as amended, MCL 37.1101 *et seq.*, and all other federal, state, and local fair employment practices and equal opportunity laws and covenants that it shall not discriminate against any employee or applicant for employment, to be employed in the performance of this Agreement, with respect to his or her hire, tenure, terms, conditions, or privileges of employment, or any matter directly or indirectly related to employment, because of his or her race, religion, color, national origin, age, sex, height, weight, marital status, or physical or mental disability that is unrelated to the individual's ability to perform the duties of a particular job or position. The Grantee agrees to include in every subcontract entered into for the performance of this Agreement this covenant not to discriminate in employment. A breach of this covenant is a material breach of this Agreement.

X. UNFAIR LABOR PRACTICES

The Grantee shall comply with the Employers Engaging in Unfair Labor Practices Act, 1980 PA 278, as amended, MCL 423.321 *et seq*.

XI. LIABILITY

(A) The Grantee, not the State, is responsible for all liabilities as a result of claims, judgments, or costs arising out of activities to be carried out by the Grantee under this Agreement, if the liability is caused by the Grantee, or any employee or agent of the Grantee acting within the scope of their employment or agency.

(B) Nothing in this Agreement should be construed as a waiver of any governmental immunity by the Grantee, the State, its agencies, or their employees as provided by statute or court decisions.

XII. CONFLICT OF INTEREST

No government employee, or member of the legislative, judicial, or executive branches, or member of the Grantee's Board of Directors, its employees, partner agencies, or their families shall benefit financially from any part of this Agreement.

XIII. ANTI-LOBBYING

If all or a portion of this Agreement is funded with federal funds, then in accordance with 2 CFR 200, as appropriate, the Grantee shall comply with the Anti-Lobbying Act, which prohibits the use of all project funds regardless of source, to engage in lobbying the state or federal government or

in litigation against the State. Further, the Grantee shall require that the language of this assurance be included in the award documents of all subawards at all tiers.

If all or a portion of this Agreement is funded with state funds, then the Grantee shall not use any of the grant funds awarded in this Agreement for the purpose of lobbying as defined in the State of Michigan's lobbying statute, MCL 4.415(2). "'Lobbying' means communicating directly with an official of the executive branch of state government or an official in the legislative branch of state government for the purpose of influencing legislative or administrative action." The Grantee shall not use any of the grant funds awarded in this Agreement for the purpose of litigation against the State. Further, the Grantee shall require that language of this assurance be included in the award documents of all subawards at all tiers.

XIV. DEBARMENT AND SUSPENSION

By signing this Agreement, the Grantee certifies that it has checked the federal debarment/suspension list at www.SAM.gov to verify that its agents, and its subcontractors:

(1) Are not presently debarred, suspended, proposed for debarment, declared ineligible, or voluntarily excluded from covered transactions by any federal department or the state.

(2) Have not within a three-year period preceding this Agreement been convicted of or had a civil judgment rendered against them for commission of fraud or a criminal offense in connection with obtaining, attempting to obtain, or performing a public (federal, state, or local) transaction or contract under a public transaction, as defined in 45 CFR 1185; violation of federal or state antitrust statutes or commission of embezzlement, theft, forgery, bribery, falsification or destruction of records, making false statements, or receiving stolen property.

(3) Are not presently indicted or otherwise criminally or civilly charged by a government entity (federal, state, or local) with commission of any of the offenses enumerated in subsection (2).

(4) Have not within a three-year period preceding this Agreement had one or more public transactions (federal, state, or local) terminated for cause or default.

(5) Will comply with all applicable requirements of all other state or federal laws, executive orders, regulations, and policies governing this program.

XV. AUDIT AND ACCESS TO RECORDS

The State reserves the right to conduct a programmatic and financial audit of the project, and the State may withhold payment until the audit is satisfactorily completed. The Grantee will be required to maintain all pertinent records and evidence pertaining to this Agreement, including grant and any required matching funds, in accordance with generally accepted accounting principles and other procedures specified by the State. The State or any of its duly authorized representatives must have access, upon reasonable notice, to such books, records, documents, and other evidence for the purpose of inspection, audit, and copying. The Grantee will provide proper facilities for such access and inspection. All records must be maintained for a minimum of five years after the final payment has been issued to the Grantee by the State.

XVI. INSURANCE

(A) The Grantee must maintain insurance or self-insurance that will protect it from claims that may arise from the Grantee's actions under this Agreement.

(B) The Grantee must comply with applicable workers' compensation laws while engaging in activities authorized under this Agreement.

XVII. OTHER SOURCES OF FUNDING

The Grantee guarantees that any claims for reimbursement made to the State under this Agreement must not be financed by any source other than the State under the terms of this Agreement. If funding is received through any other source, the Grantee agrees to delete from Grantee's billings, or to immediately refund to the State, the total amount representing such duplication of funding.

XVIII. COMPENSATION

(A) A breakdown of costs allowed under this Agreement is identified in Appendix A. The State will pay the Grantee a total amount not to exceed the amount on page 1 of this Agreement, in accordance with Appendix A, and only for expenses incurred. All other costs necessary to complete the project are the sole responsibility of the Grantee.

(B) Expenses incurred by the Grantee prior to the Start Date or after the End Date of this Agreement are not allowed under the Agreement.

(C) The State will approve payment requests after approval of reports and related documentation as required under this Agreement.

(D) The State reserves the right to request additional information necessary to substantiate payment requests.

(E) Payments under this Agreement may be processed by Electronic Funds Transfer (EFT). The Grantee may register to receive payments by EFT at the SIGMA Vendor Self Service web site (https://sigma.michigan.gov/webapp/PRDVSS2X1/AltSelfService).

XIX. CLOSEOUT

(A) A determination of project completion, which may include a site inspection and an audit, shall be made by the State after the Grantee has met any match obligations, satisfactorily completed the activities, and provided products and deliverables described in Appendix A.

(B) Upon issuance of final payment from the State, the Grantee releases the State of all claims against the State arising under this Agreement. Unless otherwise provided in this Agreement or by State law, final payment under this Agreement shall not constitute a waiver of the State's claims against the Grantee.

(C) The Grantee shall immediately refund to the State any payments in excess of the costs allowed by this Agreement.

XX. CANCELLATION

This Agreement may be canceled by the State, upon 30 days written notice, due to Executive Order, budgetary reduction, other lack of funding, upon request by the Grantee, or upon mutual agreement by the State and Grantee. The State may honor requests for just and equitable compensation to the Grantee for all satisfactory and eligible work completed under this Agreement up until 30 days after written notice, upon which time all outstanding reports and documents are due to the State and the State will no longer be liable to pay the grantee for any further charges to the grant.

XXI. TERMINATION

(A) This Agreement may be terminated by the State as follows.

(1) Upon 30 days written notice to the Grantee:

a. If the Grantee fails to comply with the terms and conditions of the Agreement, or with the requirements of the authorizing legislation cited on page 1, or the rules promulgated thereunder, or other applicable law or rules.
b. If the Grantee knowingly and willingly presents false information to the State for the purpose of obtaining this Agreement or any payment under this Agreement.
c. If the State finds that the Grantee, or any of the Grantee's agents or representatives, offered or gave gratuities, favors, or gifts of monetary value to any official, employee, or agent of the State in an attempt to secure a subcontract or favorable treatment in awarding, amending, or making any determinations related to the performance of this Agreement.
d. If the Grantee or any subcontractor, manufacturer, or supplier of the Grantee appears in the register of persons engaging in unfair labor practices that is compiled by the Michigan Department of Licensing and Regulatory Affairs or its successor.
e. During the 30-day written notice period, the State shall withhold payment for any findings under subparagraphs a through d, above and the Grantee will immediately cease charging to the grant and stop earning match for the project (if applicable).

(2) Immediately and without further liability to the State if the Grantee, or any agent of the Grantee, or any agent of any subcontract is:

a. Convicted of a criminal offense incident to the application for or performance of a State, public, or private contract or subcontract;
b. Convicted of a criminal offense, including but not limited to any of the following: embezzlement, theft, forgery, bribery, falsification or destruction of records, receiving stolen property, or attempting to influence a public employee to breach the ethical conduct standards for State of Michigan employees;
c. Convicted under State or federal antitrust statutes; or
d. Convicted of any other criminal offense that, in the sole discretion of the State, reflects on the Grantee's business integrity.
e. Added to the federal or state Suspension and Debarment list.

(B) If a grant is terminated, the State reserves the right to require the Grantee to repay all or a portion of funds received under this Agreement.

XXII. IRAN SANCTIONS ACT

By signing this Agreement, the Grantee is certifying that it is not an Iran linked business, and that its contractors are not Iran linked businesses, as defined in MCL 129.312.

XXIII. DISCLOSURE OF INFORMATION

All reports and other printed or electronic material prepared by or for the Grantee under the Agreement will not be distributed without the prior written consent of the State except for items disclosed in response to a Freedom of Information Act request, Court Order or subpoena.

APPENDIX A

Project Overview:

This project involves work related to the City of Livonia's drinking water Asset Management Plan (AMP) and Distribution System Materials Inventory (DSMI). Field verification will be conducted for a minimum of 381 service lines out of their total of 38,526. This includes potholing on either side of each curb stop, applicable restoration, and in-building documentation of service line materials. All information will be reviewed and put into the city's Geographic Information System database.

The city's drinking water AMP will be updated based on information gathered during the DSMI investigations as well as other portions of the plan, including condition assessment, criticality, level of service goals, capital improvement plan, and a rate sufficiency assessment.

EGLE approved estimated project costs include:

Task	Budget
AMP	$30,000
DSMI	$395,900
Equipment	$0
Project Cost Subtotal	**$425,900**
Total Grant Amount	**$425,900**

Program-specific Requirements:

1. Non-professional contractor services should be competitively bid.

2. A signed contract is needed for contracted services greater than $50,000 prior to reimbursement.

3. Force account may be utilized with justification documenting the need. Force account fringe benefits are limited to 40 percent and holiday and overtime pay is not grant eligible. Utility indirect costs (rent, overhead, etc.) are not grant eligible. A detailed summary sheet(s) including name, title, hours worked, per hour compensation (show wages and fringes) of each municipal employee with time billed to the project, along with a description of the service the employee provided, is needed for reimbursement.

4. Eligible equipment purchases with acceptable justification, such as computer hardware or software used directly for asset management or materials assessment, can be reimbursed at 25 percent of the purchase price if the equipment can be used for multiple asset types, at EGLEs discretion. This may include training related to that equipment/hardware/software purchase. If the equipment will be shared with a neighboring community, EGLE will consider reimbursement up to 50 percent of the equipment purchase price. Adequate maintenance and procedures must be developed to keep equipment purchased in good working condition for the entirety of the grant period.

5. Completion of grant funded work does not constitute approval by the Department of Environment, Great Lakes, and Energy's Drinking Water and Environmental Health Division to meet a regulatory obligation. All compliance related questions need to be directed to your district engineer. All water systems need to meet required compliance deadlines and approval and execution of this grant contract does not alter a water supply's obligation to meet compliance deadlines.

Grant Administration and Close Out:

As mentioned previously, in Section IV, GRANTEE DELIVERABLES AND REPORTING REQUIREMENTS, the Grantee must complete and submit financial and progress reports and must include supporting documentation of eligible project expenses. Reports shall include the Financial Status Report Form with supporting cost documentation (i.e. vendor invoices), a report including a brief description of work completed during the reporting period, and any delays occurred or anticipated. Reports shall be due within 30 days of the end of each monthly reporting period. If applicant chooses not to submit reimbursement requests monthly, the EGLE project manager must be notified that no submission will be completed for the month.

The Grantee must provide a final project report, which shall include a summary of work completed utilizing grant funds, including any significant lessons learned and anticipated needs going forward. The Grantee shall submit the final status report, including the Financial Status Report Form with all supporting documentation for expenses, along with the final project report and any other outstanding products within 30 days of substantial completion of the project or the end date of the agreement whichever occurs first.

Grant information including grantee name, grant award amount, and a project summary will be shared with the legislature and posted on EGLEs website.

On a motion by White, supported by Jolly, it was:

#336-21 RESOLVED, that having considered the report and recommendation of the City Engineer, dated October 26, 2021, submitted pursuant to Council Resolution No. 365-16, which bears the signatures of the Director of Public Works, the Director of Finance and the City Attorney, and is approved for submission by the Mayor, requesting to extend the Qualification-Based Selection (QBS) contracts with OHM Advisors, Hubbell, Roth and Clark, Inc., Spalding Dedecker Associates, Inc. and Anderson, Eckstein and Westrick, Inc., for a period of five (5) years, for future proposals relating to professional engineering consulting services, the Council does hereby accept the proposal to extend the qualification based-selection (qbs) contracts with OHM Advisors, 34000 Plymouth Road, Livonia, MI 48150, Hubbell, Roth and Clark, Inc., 555 Hulet Drive, Bloomfield Hills, MI 48303-0824, Spalding Dedecker Associates, Inc., 905 South Boulevard East, Rochester Hills, MI 48307-5358, and Anderson, Eckstein and Westrick, Inc., 51301 Schoenherr Road, Shelby Township, mi 48315, for a five (5) year period ending November 30, 2026, to perform Professional Engineering Services on various Federal, State and Locally funded roads, bridges, storm sewers, sanitary sewers, water mains, traffic signal modernization and pedestrian signal upgrades and other related projects; FURTHER, the Mayor and City Clerk are hereby authorized to execute contracts for and on behalf of the City of Livonia with the aforesaid companies and to do all other things necessary or incidental to the full performance of this resolution; and all QBS contracts based on scope and contract amount for each future individual project will be brought before the City Council for funding approval.

CONSENT AGENDA ITEM 7 (Regular Meeting of November 22, 2021)

Motion by: **White**
Seconded by: **Jolly**
ROLL CALL:
Ayes: **Bahr, White, McCullough, Donovic, Jolly, Toy, McIntyre**
None
Absent: **None**

Meeting was called to order at 8:06 p.m. by Council Vice President Jim Jolly. Present: Vice President Laura Toy, Scott Bahr, Rob Donovic, Scott Morgan, Brandon McCullough. Absent: Kathleen McIntyre

Elected and appointed officials present: Maureen Miller Brosnan, Mayor, Susan Nash, City Clerk, Paul Bernier, City Attorney, Todd Zilincik, City Engineer, LaShawn Thomas, Director of Governmental Affairs, Thomas Goralski Police Chief, Brandie Isaacson, Housing Director, Ted Davis, Superintendent of Parks and Recreation, Jacob Rushlow, Assistant Superintendent of Public Works.

Councilmember Scott Bahr led the Pledge of Allegiance.

13. PROPOSED AMENDMENT TO LIVONIA CODE OF ORDINANCE, AS AMENDED: Department of Law, re: to add Chapter 65 (Civil Rights Non-Discrimination) to Title 2, in order to streamline the process for reporting discriminatory behavior in our community, expand protections for those who face discrimination, and make a clear statement about our values as an arms-wide-open community.

    Paul Bernier, City Attorney, presented the request to Council.

    Councilmember Brandon McCullough stated this item was brought forward by the Mayor's Office last year. He noted the last update was 1982 and would like to study it further. He then offered to put this item in Committee of the Whole. Council President Jim Jolly agreed the item needs to be studied in a committee structure to work through changes.

    Council Vice President Toy asked that they are informed of the Civil Rights Act with Elliot Larson and how it relates to local government. Paul Bernier indicated the ordinance was written to comply with both and will answer questions Council may have and how it relates to Elliot Larson, Supreme Court decisions and Livonia ordinances.

    Council President Jim Jolly stated that although the item was created some time ago, they have not been able to discuss it as a Council and looks forward to reviewing it in Committee.

    Ellen Cane, Livonia, asked to review issues that have occurred in Livonia to see if this amendment would have helped.

    Margaret Erle, 31545 Pembroke Street, asked if there is a list of topics of discrimination, what is the proof that someone has been discriminated against, who will be adjudicating alleged discrimination and what would be the punishment.

    Council President Jim Jolly encouraged everyone to read the ordinance on the city website.

    Richard Glover, 14369 Brentwood Street, Chair of Human Relations Commissions, thanked Council for bringing the item forward.

Darryl Smith, 14006 Brookfield, asked if the residents will be invited to attend the Committee Meeting of the Whole. President Jolly stated all of the meetings are public and they are all welcome to attend.

Sara Overwater, Westmore Street and Barb Iovan (address withheld) each stated they are glad this item has come forward.

Deb Christiansen, Lori Shuk (addresses withheld) each stated they are glad this has come forward and hope the Council reviews the revised draft along with the language prepared by Law.

Matt McClellan, 35155 Leon, stated he does not think the constitution needs to be amended. President Jim Jolly noted this is an amendment, not the constitution.

Karen (address withheld) stated she is opposed to the NDO and is concerned with some of the language that was proposed.

Denise Robison (address withheld) stated she has seen many changes in the city over the years and we need to welcome the changes and keep an open mind.

Councilmember Scott Bhar stated that in response to a resident comment, nothing has been missed, since this is the first time this item has been formally brought forward to Council.

DIRECTION: COMMITTEE OF THE WHOLE CONSENT

LETTER TO THE LIVONIA CITY COUNCIL

13.

Law
June 4, 2021

MEETING DATE	PREPARED BY
June 14, 2021	Carol Driskill, Legal Stenographer II,

AGENDA ITEM

PROPOSED AMENDMENT TO LIVONIA CODE OF ORDINANCE, AS AMENDED: Department of Law, re: to add Chapter 65 (Civil Rights Non-Discrimination) to Title 2, in order to streamline the process for reporting discriminatory behavior in our community, expand protections for those who face discrimination, and make a clear statement about our values as an arms-wide-open community.

BACKGROUND

Over the past year, the Livonia Human Relations Commission has worked together with the Mayor's Office and Law Department to review the City of Livonia's existing non-discrimination policies and ordinances.

They found that, while individual departments may have practices in place for reviewing discrimination complaints, the City of Livonia does not have a standardized, citywide process for receiving or investigating discrimination complaints. Additionally, the City's two existing non-discrimination ordinances, the Open Housing Ordinance 9.18, and the Physical Limitation Discrimination Ordinance 2.68, were last updated in 1972 and 1982, respectively.

Therefore, Mayor Brosnan, with support from the Livonia Human Relations Commission, is recommending the City Council adopt a new Civil Rights Non-Discrimination Ordinance (Proposed Amendment Adding Chapter 65 to Title 2 of the Livonia Code of Ordinances, as amended) that will streamline the process for reporting discriminatory behavior in our community, expand protections for those who face discrimination, and make a clear statement about our values as an arms-wide-open community.

Diversity, equity and inclusion are priorities that Livonia residents have come together to ask us to advance. This ordinance will help us build on our work in transparency and accountability that Livonia residents and community members expect from City government.

This proposed ordinance focuses on two specific areas:

1. It centralizes the process for receiving and investigating discrimination complaints in the Law Department, as they are best-suited to handle these complaints.

2. It expands the protections offered to those facing discriminatory behavior in public spaces.

The language of the proposed ordinance reflects the text of non-discrimination ordinances that have been adopted in nearly 60 municipalities across Michigan, including communities in every corner of

the State and many in our region.

The ordinance requires the Law Department to provide an annual report to the Mayor's Office regarding the status of such complaints each year.

This ordinance sets specific time for a complaint to be filed (within 180 days), a clear list of details that are required (description of the conduct, contact information, dates, locations, etc.), and provides the Law Department with the responsibility to determine whether a case is prosecuted in District Court, denied, or referred to another agency for review.

We believe this ordinance will serve as a disincentive for discriminatory behavior, protect individual rights by specifically carving out protections for speech and religious practices as protected in the U.S. Constitution, and will align our city's laws with our community values and priorities.

Thank you in advance for your consideration.

RECOMMENDATION

FISCAL CONSIDERATION

ATTACHMENTS

1. Chapter 2.65 - Civil Rights Non-Discrimination

APPROVED BY

Date: June 04, 2021

Paul Bernier, City Attorney

Date: June 04, 2021

Maureen Miller Brosnan, Mayor

AN ORDINANCE ADDING CHAPTER 65 (CIVIL RIGHTS NON-DISCRIMINATION) TO TITLE 2 OF THE LIVONIA CODE OF ORDINANCES, AS AMENDED.

THE CITY OF LIVONIA ORDAINS:

Section 1. Chapter 65 is hereby Added to Title 2 of the Livonia Code of Ordinances, as amended, is hereby amended to read as follows:

CHAPTER 2.65

CIVIL RIGHTS NON-DISCRIMINATION

Sections:

2.65.010 Title for citation.
2.65.020 Equal protection of the law required.
2.65.030 Definitions.
2.65.040 Municipal contracts—Nondiscrimination provisions required.
2.65.050 Real estate transactions—Discrimination prohibited.
2.65.060 Gas stations—Assistance at self-service pumps.
2.65.070 Penalty.
2.65.080 Complaint investigation.

2.65.010 – Title for citation. The ordinance codified in this chapter may be known and cited as the "civil rights non-discrimination ordinance."

2.65.020 – Equal protection of the law required.

A. No person shall be denied the equal protection of the laws, nor shall any person be denied the enjoyment of his or her civil or political rights or be discriminated against in the exercise thereof or be denied employment, public accommodations, housing or public services because of age, height or weight, race, color, creed, physical limitation, religion, ancestry, national or sectional origin, gender, gender expression, gender identity, sex, sexual orientation or marital status.

B. No person shall adopt, enforce, or employ any policy, requirement, qualification, practice, or factor which has the effect of creating unequal treatment or opportunities relating to employment, public accommodations as defined by 42 U.S. Code §12181(7), housing or public services on the basis of actual or perceived membership in a protected class as defined in this chapter.

C. The prohibitions against discrimination provided for in this chapter shall not be deemed preempted by state or federal law, but are intended to supplement such law.

D. This chapter shall be construed and applied in a manner consistent with the First and 14th Amendments of the U.S. Constitution and Art. I, §§ 2, 4 and 5 of the Constitution of Michigan regarding freedom of speech and free exercise of religion.

2.65.030 – Definitions.

A. "Discrimination or discriminate" means to make a decision, offer to make a decision, or refrain from making a decision, based in whole or in part on the actual or perceived age, race, color, creed, religion, ancestry, national or sectional origin, gender, gender expression, gender identity, sex, sexual orientation or marital status of that person, person's relatives which results in the unequal treatment of any person, or denies, prevents, limits, or adversely affects the benefit of enjoyment of any person, of employment, or public accommodations or public services.

B. "Gender or gender identity" means a person's actual or perceived gender, including a person's gender identity, self-image, appearance, expression, or behavior, whether or not that gender identity, self-image, appearance, expression, or behavior is different from that traditionally associated with the person's sex at birth as being either female or male.

C. "Physical limitation," as used in this chapter, means a limitation of physical capabilities unrelated to one's ability to perform the work involved in jobs or positions available to them for hire or promotion or a limitation of physical capabilities unrelated to one's ability to acquire, rent and maintain property. "Physical limitation" includes, but is not limited to, blindness or partial-sightedness, deafness or hearing impairment, muteness, partial or total absence of physical member, speech impairment, motor impairment.

D. "Sex" means the status of being a man/boy or woman/girl, and a person's conformity to sex stereotypes.

E. "Sexual orientation" means male or female homosexuality, heterosexuality, or bisexuality, whether past or present. This includes emotional, romantic, and/or sexual attractions, or the absence thereof, to other people. Sexual orientation also refers to a person's sense of identity based on those attractions, related behaviors, and membership in a community of others who share those attractions.

2.65.040 – Municipal contracts—Nondiscrimination provisions required. All contracting agencies of the city or any department of the city shall include in all contracts hereafter negotiated, or renegotiated, a provision requiring the contractor not to discriminate against an employee or applicant for employment with respect to his or her hire, tenure, terms, conditions or privileges of employment, due to membership in a protected class as defined in this chapter.

2.65.050 – Real estate transactions—Discrimination prohibited.

A. No owner of real property, lessee, sublessee, real estate broker or salesman, lender, financial institution, advertiser or agent of any of the foregoing shall discriminate against any person on the basis of actual or perceived membership in a protected class as defined in this chapter, in regard to the sale or rental of, or dealings concerning real property located in the city.

B. An owner shall not be required to offer property to the public at large before selling or renting it, nor shall this chapter be deemed to prohibit owners from giving preference to prospective tenants or buyers for reasons other than on the basis of actual or perceived membership in a protected class as defined in this chapter.

2.65.060 – Gas stations—Assistance at self-service pumps. In the event an attendant is available at a self-service only gas station, it shall be his responsibility upon request to assist a physically handicapped person at a self-service pump in the dispensing of flammable liquid into that person's vehicles.

2.65.070 – Penalty. Any person in violation of this section shall be deemed to have committed a civil infraction and shall be ordered to pay a civil fine up to five hundred dollars ($500.00), plus costs. Any person in violation of this section for a second offense shall be ordered to pay a civil fine of five hundred dollars ($500.00), plus costs. Any person in violation of this section for a third or subsequent offense shall be guilty of a misdemeanor.

2.65.080 – Complaint investigation.

A. A complaint may be filed with the City Law Department by any individual (the complainant) who has experienced or been witness to discrimination within the City as described in this chapter. The complaint must be filed in person, by mail, or by email within one hundred eighty (180) calendar days of the date upon which the complainant knew or should have known of the alleged discriminatory act. If an individual fails

to file a complaint within the specified time frame, the complaint will not be considered.

B. A complaint shall indicate, at a minimum, all parties involved, the contact information of the complainant, a description of the discriminatory conduct, the date(s) and location(s) of its occurrence, and the protected class or classes which were discriminated against. The complaint will not be processed without this information.

C. It shall be the responsibility of the Law Department to determine whether a complaint should be prosecuted in the District Court, denied, or referred to another appropriate agency for review and consideration.

Section 2. All ordinances or parts of ordinances in conflict herewith are hereby repealed only to the extent necessary to give this ordinance full force and effect.

Section 3. Should any portion of this ordinance be held invalid for any reason, such holding shall not be construed as affecting the validity of any of the remaining portions of this ordinance.

LETTER TO THE LIVONIA CITY COUNCIL

13.

Law
August 2, 2022

MEETING DATE	PREPARED BY
S092622	Carol Driskill, Legal Stenographer II,

AGENDA ITEM

PROPOSED AMENDMENT TO LIVONIA CODE OF ORDINANCE, AS AMENDED: Department of Law, re: to add Chapter 65 (Civil Rights Non-Discrimination) to Title 2, in order to streamline the process for reporting discriminatory behavior in our community, expand protections for those who face discrimination, and make a clear statement about our values as an arms-wide-open community.

BACKGROUND

Note: Previously submitted for June 14, 2021 Study Meeting. No changes have been made except for correction of one typographical error.

Over the past year, the Livonia Human Relations Commission has worked together with the Mayor's Office and Law Department to review the City of Livonia's existing non-discrimination policies and ordinances.

They found that, while individual departments may have practices in place for reviewing discrimination complaints, the City of Livonia does not have a standardized, citywide process for receiving or investigating discrimination complaints. Additionally, the City's two existing non-discrimination ordinances, the Open Housing Ordinance 9.18, and the Physical Limitation Discrimination Ordinance 2.68, were last updated in 1972 and 1982, respectively.

Therefore, Mayor Brosnan, with support from the Livonia Human Relations Commission, is recommending the City Council adopt a new Civil Rights Non-Discrimination Ordinance (Proposed Amendment Adding Chapter 65 to Title 2 of the Livonia Code of Ordinances, as amended) that will streamline the process for reporting discriminatory behavior in our community, expand protections for those who face discrimination, and make a clear statement about our values as an arms-wide-open community.

Diversity, equity and inclusion are priorities that Livonia residents have come together to ask us to advance. This ordinance will help us build on our work in transparency and accountability that Livonia residents and community members expect from City government.

This proposed ordinance focuses on two specific areas:

1. It centralizes the process for receiving and investigating discrimination complaints in the Law Department, as they are best-suited to handle these complaints.

2. It expands the protections offered to those facing discriminatory behavior in public spaces.

The language of the proposed ordinance reflects the text of non-discrimination ordinances that have been adopted in nearly 60 municipalities across Michigan, including communities in every corner of the State and many in our region.

The ordinance requires the Law Department to provide an annual report to the Mayor's Office regarding the status of such complaints each year.

This ordinance sets specific time for a complaint to be filed (within 180 days), a clear list of details that are required (description of the conduct, contact information, dates, locations, etc.), and provides the Law Department with the responsibility to determine whether a case is prosecuted in District Court, denied, or referred to another agency for review.

We believe this ordinance will serve as a disincentive for discriminatory behavior, protect individual rights by specifically carving out protections for speech and religious practices as protected in the U.S. Constitution, and will align our city's laws with our community values and priorities.

Thank you in advance for your consideration.

RECOMMENDATION

Approve as submitted.

FISCAL CONSIDERATION

N/A

ATTACHMENTS

1. June 4, 2021 Letter to Council (signed)
2. Chapter 2.65 - Civil Rights Non-Discrimination

APPROVED BY

SENIOR CITIZENS, FAMILIES AND ENVIRONMENT COMMITTEE MEETING
MONDAY, AUGUST 1, 2022

A Committee meeting was held on Monday, August 1, 2022, in the City Hall Council Chambers on the 2nd floor.

Committee Members Present:	Council Vice President, Laura M. Toy, Chair Councilmember Scott Morgan, Vice Chair
Committee Members Absent:	Council President Jim Jolly Councilmember Scott Bahr Councilmember Rob Gjonaj Donovic
City Officials and Others Present:	Councilmember Brandon McCullough Councilmember Kathleen E. McIntyre City Attorney, Paul Bernier Assistant Director of Public Works, Doug Moore

ADDITIONAL ATTENDEES*:

Jim Baringhaus, Chairman Greenleaf Commission
Betsy Calhoun, Greenleaf Commission
Terry Cullum, Greenleaf Commission
John Grzebik, Greenleaf Commission
Michael Shesterkin, Greenleaf Commission
Sam Caramango, GFL General Manager

MEETING CONVENED: 7:02PM

1. **CR 42-20** Subject matter of urban environmental concerns.

Discussion was led by Council Chair Laura Toy regarding waste management. Sam Caramagno, GFL General Manager stated they offer larger carts to accommodate customers and the complaints have been pretty low.

Sam discussed the fuel toll on their trucks. He stated there is 20% or less of recyclables that go into the trash. The recycling goes to New Boston. He indicated that cardboard and paper are good, but plastics vary.

There have been staffing challenges as well as challenges in getting CDL drivers.

Sam offered to provide a tour of the plant to Council.

The Committee recommends:

Councilmember Scott Morgan offered to leave this item in Committee.

Note: This item will remain in Committee for future updates

This item is to be placed on the **Regular Meeting Agenda of August 22, 2022**

The meeting was adjourned at 8:07 PM

2. **CR 23-21** Subject matter of sustainability in the City.

Discussion was led by Council Chair Laura Toy, along with the Greenleaf Commission. There is a need for education on the Tree & Solid Waste Recycling Infrastructure. The Commission recommends recycling solid waste in 65- or 95-gallon containers.

A discussion was held regarding robotic trucks and door to door service for disabled residents, similar to Novi.

A discussion took place regarding recycling bins for yard waste, hazardous waste and organic compost.

It was noted there are recycling grants for larger bins and there should be more community outreach on recycling of solid waste, possibly a phone app and guidelines for recycling.

Councilmember Kathleen McIntyre would like to get information from the Sustainability Committee, while the Chamber could identify with businesses.

Electronic Vehicles (EV) were discussed. Numbers were low last September, another discussion will take place again in October, which will be updated on the City website. EV in Canton, Westland and Northville have vendors for charging stations and offer rebates on fees. E-bikes were also discussed and are very mobile.

Climate change was noted to have seven (7) recommendations in September 2020; high level of greenhouses, temperature changes from 1950-2010 show a 1-degree seasonal increase.

The Committee recommends:

1. Recommendation for Administration to look at an ordinance on e-bikes following the State Law.

Note: This item will remain in Committee for future updates.

This item is to be placed on the Regular Meeting Agenda of August 22, 2022

The meeting was adjourned at 8:07PM.

Respectfully submitted,

Laura M. Toy

Laura M. Toy, Chair

LETTER TO THE LIVONIA CITY COUNCIL

14.a.

Council Office
September 19, 2022

MEETING DATE	PREPARED BY
SCF&E Committee of August 1, 2022	Sara Kasprowicz, Council Office Manager,

AGENDA ITEM

CR 42-20 Subject matter of urban environment concerns.

BACKGROUND

Discussion of urban environment concerns

RECOMMENDATION

To discuss the subject matter of urban environment concerns.

FISCAL CONSIDERATION

N/A

ATTACHMENTS

1. LTC SCFE080122
2. R021020 Subject matter urban environment concerns CR 42-20 TO REMAIN IN COMMITTEE
3. LTC: SCFE071921
4. SCFE071921 Min
5. R072621 Subject matter of urban environ concerns (TO REMAIN IN PSHE COMMITTEE) CR 243-21
6. R072621 Approval of grant application process (REFER TO ADMIN) CR 242-21

APPROVED BY

LETTER TO THE LIVONIA CITY COUNCIL

1.

Council Office
July 12, 2022

MEETING DATE	PREPARED BY
SCF&E Committee of August 1, 2022	Sara Kasprowicz, Council Office Manager,

AGENDA ITEM

CR 42-20 Subject matter of urban environment concerns.

BACKGROUND

Discussion of urban environment concerns

RECOMMENDATION

To discuss the subject matter of urban environment concerns.

FISCAL CONSIDERATION

N/A

ATTACHMENTS

1. R021020 Subject matter urban environment concerns CR 42-20 TO REMAIN IN COMMITTEE
2. LTC: PSHE071921
3. PSHE071921 Min
4. R072621 Subject matter of urban environ concerns (TO REMAIN IN PSHE COMMITTEE) CR 243-21
5. R072621 Approval of grant application process (REFER TO ADMIN) CR 242-21

APPROVED BY

2. CR 42-20 Subject matter of urban environment concerns to the Public Safety, Health and Environment Committee.

Discussion took place regarding forestry concerns in the City. Ideas were presented to repurpose wood and to use urban wood waste and millet. This would include assistance from adult residents and students, which could expose them to careers in natural resources and forestry.

Climate change has shifted the use of materials. More wood has been incorporated in to building structures as a substitute for more carbon intensive materials.

Michigan State has a forestry program to involve students in the process of using cross-laminated timber panels and the use sustainable waste.

Discussion on the City's weekly recycle program took place and a suggestion was made to remind and educate residents of what can and cannot be recycled.

An invitation was given to tour the STEM Teaching and Learning Facility at Michigan State University.

The Committee recommends:

Receiving updates regarding environmental concerns as needed.

Note: This item will remain in committee for further discussions

This item is to be placed on the **Regular Meeting Agenda of March 22, 2021**

The meeting was adjourned at 9:42 p.m.

Respectfully submitted,

Laura M. Toy Chair	Brandon McCullough Vice Chair	Rob Gjonaj Donovic Member

cc: City Clerk, City Attorney

Attachment - Attendee Report (Zoom)

CITY COUNCIL
Subject matter urban environment concerns.
(Refer to the Public Safety, Health and Environment Committee)

#42-20 RESOLVED, that upon the motion by Councilmember Laura Toy, seconded by Council Vice President Scott Bahr, at the Regular Meeting held February 10, 2020, the Council does hereby refer the subject matter of urban environment concerns to the Public Safety, Health and Environment Committee for its report and recommendation.

REGULAR MEETING OF February 10, 2020

Councilmembers Present: Donovic, Jolly, Toy, Bahr, White, McCullough, McIntyre

Councilmember(s) Absent: None

LETTER TO THE LIVONIA CITY COUNCIL

Council Office
July 9, 2021

MEETING DATE	PREPARED BY
July 19, 2021	Sara Kasprowicz, Council Office Manager,

AGENDA ITEM

CR 42-20 Subject matter of urban environment concerns to the Public Safety, Health and Environment Committee.

BACKGROUND

To continue discussion of the subject matter of urban environment concerns.

RECOMMENDATION

Report and recommendation from Council

FISCAL CONSIDERATION

N/A

ATTACHMENTS

None

APPROVED BY

PUBLIC SAFETY, HEALTH AND ENVIRONMENT COMMITTEE

MONDAY, JULY 19, 2021

A Public Safety, Health and Environment Committee meeting was held on Monday, July 19, 2021.

Committee Members Present: Laura M. Toy, Chair
Brandon McCullough, Vice Chair
Rob Gjonaj Donovic

Committee Members Absent: None

City Officials and Others Present: Cathy White, Council Member
Tom Goralski, Acting Police Chief
Dave Heavener, Fire Chief
Paul Bernier, City Attorney
LaShawn Thomas, Director of Governmental Affairs
Josh Sabo, Director of Communications
Jim Baringhaus, Chairman Greenleaf Commission
Betsy Calhoun, Greenleaf Commission Member
John Grzebik, Greenleaf Commission Member
Michael Shesterkin, Greenleaf Commission Member

See attached attendee report.

The meeting convened at 7:10 p.m.

1. CR 42-20 Subject matter of urban environment concerns.

The meeting was led by Committee Chair, Laura Toy. Beginning discussion took place regarding the EGLE Recycling Partnership Cart Grant. Getting an early start could provide 20% of the grant to use towards recycling, which would need to be completed and submitted by the deadline of August 18, 2021.

Suggestions of grant uses were made:

- Roads and pathways in the Fall of 2022
- Use 64-gallon bins, which are partially made of recycled materials

Councilmember Brandon McCullough mentioned an Innovation grant offered by NextCycle Michigan that could be used toward creating pathways made of recycled materials. He offered a resolution to complete and submit both of the recycling grant applications.

Comments were made that people are ready to move on. The 2015 contract with the recycling company expires in 2 (two) years and we need a process for now and in 2 (two) years from now. Historical data will show where we are and what we need to move forward.

An education session was suggested as an important tool to inform residents of how to properly recycle.

Large discussion took place regarding the repurposing of trees. Money could be available from the State to assist.

The Tree Committee will be discussing a tree ordinance to include tree credits and landmark trees.

The Committee recommends:

- A resolution for the Community Resources and Communications Department along with the Director of Governmental Affairs to complete and submit both recycling grant applications prior to their deadlines.
- Receiving updates regarding environmental concerns as needed.

Note: This item will remain in committee for further discussions

This item is to be placed on the **Regular Meeting Agenda of July 26, 2021**

2. CR 111-18 Subject matter of measures to retain employees within the Police and Fire Divisions of the Department of Public Safety.

Acting Police Chief, Tom Goralski began the discussion, stating that the police force is down by 31 (thirty-one) officers, in addition to the lack of dispatchers and others due to problems with the media along with unemployment assistance that was provided due to COVID.

The budget goal is 189 employees for a full department. The Defined Benefit Plan could supply a larger pool of people for recruitment. On August 1st, they will begin an experiment of using 12-hour shifts.

He is hopeful for more employees by September and is aggressively trying to recruit hire and retain officers. It was noted that 1:7 tend have a background in the military.

The State Police provides an 18-week academy while Livonia provides a 10-week academy for Certified Officers with lateral pay.

Fire Chief Heavener explained that the Fire Department has experienced different challenges. During exit interviews, the employees were going to other Fire Departments with a Defined Benefit Plan. Now that the Defined Benefit Plan is back for the Livonia Fire Department, it has helped, but they are still down by eight (8) employees. Fully staffed should be 82 employees. The applicant pools aren't the same. They are using lateral pay as an initiative for applicants, which offers five (5) steps of pay.

He has a partnership with Schoolcraft College that provides a dual enrollment program. Livonia and Clarenceville students that are 18 years of age can receive 20 (twenty) college credit hours.

Note: This item will remain in committee for further discussions

This item is to be placed on the **Regular Meeting Agenda of July 26, 2021**

The meeting was adjourned at 8:53 p.m.

Respectfully submitted,

Laura M. Toy Chair	Brandon McCullough Vice Chair	Rob Gjonaj Donovic Member

cc: City Clerk, City Attorney

Attachment - Attendee List

PLEASE RECORD YOUR ATTENDANCE AT THIS MEETING

MEETING: PUBLIC SAFETY HEALTH & ENVIRONMENT COMMITTEE

DATE: MONDAY, JULY 19, 2021

TIME: 7:00 PM

NAME	ADDRESS
Michael Shesterkin	[redacted]
Betsy Calhoun	
Chris Lot	
John Grzebik	
Tom Goralski	
Dave Heavener	
Carmen Thomas	city hall

#243-21 RESOLVED, that having considered the report and recommendation of the Public Safety, Health & Environment Committee, dated July 19, 2021, submitted pursuant to Council Resolution 42-20, regarding the subject matter of urban environment concerns, the Council does hereby determine to receive updates regarding environmental concerns as needed.

This item will remain in Committee.

UNFINISHED BUSINESS ITEM 18a (Regular Meeting of July 26, 2021)

Councilmembers Present: Donovic, Jolly, Toy, Bahr, White, McCullough, McIntyre
Councilmembers Absent: None

Laura Toy, as Chair of the Public Safety, Health & Environment Committee, reported out on the meeting of July 19, 2021.

a. CR 42-20 Subject matter of urban environment concerns.

RESOLVED, that having considered the report and recommendation of the Public Safety, Health & Environment Committee, dated July 19, 2021, submitted pursuant to Council Resolution 42-20, regarding the subject matter of urban environment concerns, the Council does hereby refer this item to the Director of Governmental Affairs and the Department of Community Resources and Communications to complete and submit both the applications for the Recycling Partnership Cart Grant offered by the State Department of Environment, Great Lakes and Energy, and the Innovation Grant offered by Nextcycle Michigan, prior to their deadlines.

Following discussion by Council, Vice President Bahr made a Friendly Amendment to the resolution offered by Toy and supported by Donovic, who accepted the amendment to read as follows:

#242-21 RESOLVED, that having considered the report and recommendation of the Public Safety, Health & Environment Committee, dated July 19, 2021, submitted pursuant to Council Resolution 42-20, regarding the subject matter of urban environment concerns, the Council does hereby refer this item to the Administration to complete and submit both the applications for the Recycling Partnership Cart Grant offered by the State Department of Environment, Great Lakes and Energy, and the Innovation Grant offered by Nextcycle Michigan, prior to their deadlines.

A roll call vote was taken on the foregoing resolution with the following result:

AYES: Donovic, Jolly, Toy, Bahr, White, McCullough and McIntyre

NAYS: None

The President declared the resolution adopted.

UNFINISHED BUSINESS ITEM 18a (Regular Meeting of July 26, 2021)

Motion by:	**Toy**
Seconded by:	**Donovic**
ROLL CALL:	
Ayes:	**Donovic, Jolly, Toy, Bahr, White, McCullough, McIntyre**
Nays:	**None**
Absent:	**None**

LETTER TO THE LIVONIA CITY COUNCIL

14.b.

Council Office
September 19, 2022

MEETING DATE	PREPARED BY
SCF&E Committee of August 1, 2022	Sara Kasprowicz, Council Office Manager,

AGENDA ITEM

CR 23-21 Subject matter of sustainability in the City.

BACKGROUND

CR 23-21 Subject matter of sustainability in the City at an upcoming Public Safety, Health and Environment Committee for its report and recommendation meeting.

RECOMMENDATION

To discuss subject matter of sustainability in the City

FISCAL CONSIDERATION

N/A

ATTACHMENTS

1. LTC SCFE080122
2. SCFE022421 Min
3. R032221 Subject matter of sustainability in the City CR 23-21 TO REMAIN IN COMMITTEE

APPROVED BY

LETTER TO THE LIVONIA CITY COUNCIL

2.

Council Office
July 12, 2022

MEETING DATE	PREPARED BY
SCF&E Committee of August 1, 2022	Sara Kasprowicz, Council Office Manager,

AGENDA ITEM

CR 23-21 Subject matter of sustainability in the City.

BACKGROUND

CR 23-21 Subject matter of sustainability in the City at an upcoming Public Safety, Health and Environment Committee for its report and recommendation meeting.

RECOMMENDATION

To discuss subject matter of sustainability in the City

FISCAL CONSIDERATION

N/A

ATTACHMENTS

1. PSHE022421 Min
2. R032221 Subject matter of sustainability in the City CR 23-21 TO REMAIN IN COMMITTEE

APPROVED BY

PUBLIC SAFETY, HEALTH AND ENVIRONMENT COMMITTEE

WEDNESDAY, FEBRUARY 24, 2021

A Public Safety, Health and Environment Committee meeting was held on Wednesday, February 24, 2021 virtually via Zoom.

Committee Members Present: Laura M. Toy, Chair
Brandon McCullough, Vice Chair
Rob Gjonaj Donovic

Committee Members Absent: None

City Officials and Others Present:
Council President Kathleen McIntyre
Mayor Maureen Miller Brosnan
City Attorney Paul Bernier
Dir. of Administration Services Dave Varga
Fire Chief Dave Heavener
Police Chief Curt Caid
Planning & Economic Dev. Mark Taormina
Communication & Marketing Kristin Houchins
City Treasurer Lynda Scheel
Chairman Human Relations Commission Sandy Teeter
Chairman Greenleaf Commission Jim Baringhaus
Janet
Brenda Swartz

See attached Attendee Report (Zoom)

The meeting convened at 7:02 p.m.

1. CR 23-21 Subject matter of sustainability in the City at an upcoming Public Safety, Health and Environment Committee meeting.

A brief history and update was provided regarding the environment and various initiatives by the Greenleaf Commission.

- They have worked with Next Door, a free neighborhood network that has grown substantially.
- They have branched into Next Door for Public Agencies, which allows the City to connect directly into Next Door neighborhood network to communicate directly with residents, allowing their voices to be heard by the City.

Discussion took place regarding the environment with a focus on recycling. Different programs are in place in the City:

- Large, curbside orange bins
- Simple Recycling for textiles and small household items to divert textiles away from landfills to be recycled into other materials.
- Tree City Committee identified native Michigan trees and why they are necessary for the ecosystem.
- Bluestem Energy and DTE was consulted to learn how to develop a renewable energy plan, learning about solar farms and the MI-Power Michigan program
- As climate changes in the City became a concern, 12 sustainability goals have been identified to focus on from the Livonia Vision Master Plan.
- QCI, LLC in Ann Arbor was visited to learn about their ideas for future recycling.
- Newsletters and social media provide Commission updates and events and awards.
- Various Greenleaf Awards have been provided to companies in the City for their green efforts.
- Livonia has been recognized by companies outside of the city for their recycling efforts.
- Plans are being made to conduct a Livonia Sustainability Town Hall and a Climate Change Survey with Livonia Residents in April
- Reviewing plans for an Electric Vehicle Event
- Recycling packets are provided to new residents.

Suggestions were made to host an energy efficiency home workshop to include different business to give tips on energy conservation.

Questions were asked if Lawrence Tech might be able to assist with electric vehicles and the idea of e-bikes was suggested.

The Committee recommends:

Receiving updates from Greenleaf Commission on Sustainability as needed.

Note: This item will remain in committee for further discussions

This item is to be placed on the **Regular Meeting Agenda of March 22, 2021**

2. CR 42-20 Subject matter of urban environment concerns to the Public Safety, Health and Environment Committee.

Discussion took place regarding forestry concerns in the City. Ideas were presented to repurpose wood and to use urban wood waste and millet. This would include assistance from adult residents and students, which could expose them to careers in natural resources and forestry.

Climate change has shifted the use of materials. More wood has been incorporated in to building structures as a substitute for more carbon intensive materials.

Michigan State has a forestry program to involve students in the process of using cross-laminated timber panels and the use sustainable waste.

Discussion on the City's weekly recycle program took place and a suggestion was made to remind and educate residents of what can and cannot be recycled.

An invitation was given to tour the STEM Teaching and Learning Facility at Michigan State University.

The Committee recommends:

Receiving updates regarding environmental concerns as needed.

Note: This item will remain in committee for further discussions

This item is to be placed on the **Regular Meeting Agenda of March 22, 2021**

The meeting was adjourned at 9:42 p.m.

Respectfully submitted,

Laura M. Toy Chair	Brandon McCullough Vice Chair	Rob Gjonaj Donovic Member

cc: City Clerk, City Attorney

Attachment - Attendee Report (Zoom)

Public Safety Health and Environment Committee Meeting of 02/24/2021

Panelist Attendee
Kathleen McIntyre, Council President
Paul Bernier
Jim Baringhaus
Maureen Miller Brosnan
Laura Toy, Councilperson
Brandon McCullough, Councilperson
Chris
Richard K Kobe
Rob Donovic, Councilperson

Audience Attendee
Trisha Gabriel
Betsy Calhoun
John Grzebik
Maureen Miller Brosnan
Lynda L. Scheel
Charity Barnes
Mike Shesterkin
Tom Matheson
R. Hughes
LaShawn Thomas
Terry Cullum
Mrs. Mullett
Chris Last
Doug Moore
Richard K Kobe
Sam Caramagno
Nicole Mehelich
Jacob Rushlow

Councilmember Laura Toy, as Chair of the Public Safety, Health & Environment Committee, reported out on the meeting of February 24, 2021.

a. CR 23-21 Subject matter of sustainability in the City at an upcoming Public Safety, Health and Environment Committee meeting for its report and recommendation.

This item will remain in Committee.

REGULAR AGENDA ITEM 10a (Regular Meeting of March 22, 2021)

Councilmembers Present: Toy, Bahr, White, McCullough, Donovic, Jolly, McIntyre

Councilmember(s) Absent: None