COUNCIL MEMBERS
BRANDON McCULLOUGH, PRESIDENT
MARTHA PTASHNIK, VICE PRESIDENT
CARRIE BUDZINSKI
ROB GJONAJ DONOVIC
SCOTT MORGAN
LYNDA L. SCHEEL
LAURA M. TOY

33000 CIVIC CENTER DRIVE
LIVONIA, MICHIGAN 48154-3097
(734) 466-2250
citycouncil@livonia.gov

OFFICE OF THE COUNCIL

MEETING PACKET FOR THE REGULAR MEETING OF MONDAY JUNE 2, 2025 7:00 P.M.

The electronic agenda is compiled, produced and distributed by the City Council Staff.
(734) 466-2250

The official documents are on file in the City Clerk's office.

2018th Regular Meeting Agenda of the Council of the City of Livonia
Monday, June 2, 2025 - Revised
7:00 p.m. - City Hall Auditorium
33000 Civic Center Drive, Livonia, Michigan

CALL TO ORDER

INVOCATION/PLEDGE OF ALLEGIANCE

ROLL CALL

PRESENTATION OF MINUTES – Regular Meeting Minutes of May 19, 2025

AUDIENCE COMMUNICATION

REPORTS FROM THE MAYOR AND OTHER CITY OFFICIALS

a. ADMINISTRATIVE RESPONSE TO COUNCIL RESOLUTION 54-25: Office of the Mayor, re: the Noble Building Assessment.

b. Communication from the Department of Finance dated May 19, 2025, re: forwarding the Departmental Purchases Report, for the months ending February 28, 2025, and March 31, 2025.

CONSENT AGENDA

1. BLOCK PARTY: Jasmine Cone, re: to be held Thursday, June 5, 2025, from 12:00 p.m. to 2:00 p.m., between 14926 and 14987 Alexander Street. (Approving)

2. BLOCK PARTY: Lisa Misenheimer, re: to be held Saturday, August 23, 2025, from 1:00 p.m. to 10:00 p.m., on Rayburn Street, between Williams Street and Levan Road, with a rain date of Saturday, September 13, 2025. (Approving)

3. REAPPOINTMENT OF RHETT GRONEVELT TO THE PLYMOUTH ROAD DEVELOPMENT AUTHORITY: Office of the Mayor, re: for a three-year term, which will expire on May 16, 2028. (Approving)

4. REAPPOINTMENT OF GREGORY COPPOLA TO THE LIVONIA ECONOMIC DEVELOPMENT CORP: Office of the Mayor, re: for a six-year term, which will expire on June 7, 2031. (Approving)

5. REAPPOINTMENT OF DAVID BONGERO TO THE LIVONIA PLANNING COMMISSION: Office of the Mayor, re: for a three-year term, which will expire on June 9, 2028. (Approving)

6. REAPPOINTMENT OF JOHN MURPHY TO THE LIVONIA LOCAL OFFICERS COMPENSATION COMMISSION: Office of the Mayor, re: for a seven-year term, which will expire on April 2, 2032. (Approving)

7. WAIVER PETITION: Planning Commission, re: Petition 2025-02-02-07, submitted by Midwest Freight Storage, requesting waiver use approval to operate an outdoor truck and trailer storage facility at 32225 Schoolcraft Road, located on the south side of Schoolcraft Road between Hubbard and Merriman Roads in the Northeast ¼ of Section 27. (Approving)

8. SITE PLAN PETITION: Planning Commission, re: Petition 2022-08-08-04 submitted by Future Land Holdings. L.L.C., requesting to amend a previously approved site plan (CR 354-22) to repurpose and expand the former restaurant building at 19265 Victor Parkway to operate a BMW motorcycle dealership, located on the west side of Victor Parkway between Seven Mile Road and Pembroke Avenue in the Southeast ¼ of Section 6. (Approving)

9. REQUEST FOR APPROVAL OF THE CDBG ANNUAL ACTION PLAN: 2025-2026 COMMUNITY DEVELOPMENT BLOCK GRANT (CDBG) ANNUAL PLAN AND BUDGET; AND REQUEST TO APPROVE HOLD HARMLESS CONTRACTS BETWEEN THE CITY OF LIVONIA AND FIRST STEP, FAIR HOUSING CENTER OF METROPOLITAN DETROIT, WAYNE METROPOLITAN COMMUNITY ACTION AGENCY, CARES IN FARMINGTON, CRUZ CLINIC, STONEBROOK COUNSELING: Livonia Housing Commission, re: in connection with the operation of a domestic violence victim assistance program; for the purpose of providing fair housing; providing utility assistance; and food assistance provided for through the Community Development Block Grant (CDBG) programs for the 2025-2026 program year. (Approving)

10. REQUEST TO APPROVE AN INTERGOVERNMENTAL AGREEMENT BETWEEN THE CHARTER COUNTY OF WAYNE AND THE CITY OF LIVONIA: Department of Parks and Recreation, re: for a grant of $140,519 to be used toward the redevelopment of Shelden Park. (Approving)

11. REQUEST TO APPROVE AN INTERGOVERNMENTAL AGREEMENT BETWEEN THE CHARTER COUNTY OF WAYNE AND THE CITY OF LIVONIA: Department of Parks and Recreation, re: for a grant of $106,401 to be used toward the replacement of the fitness cluster at Rotary Park. (Approving)

12. REQUEST TO APPROVE A SUBLEASE AGREEMENT BETWEEN CITY OF LIVONIA AND MI WORK MATTERS, OPERATORS OF ANASTASIA AND KATIE'S COFFEE SHOP AND CAFE IN LIVONIA: Department of Parks and Recreation, re: for a five-year agreement with an option for an additional five years for designated cafe space in the new Senior Wellness Center. (Approving)

13. REQUEST TO APPROVE THE HOLIDAY PARADE AND TREE LIGHTING ON SUNDAY, DECEMBER 7, 2025; REQUEST TO APPROVE PARADE ROUTE AND THE CLOSING OF CERTAIN CITY STREETS; TO REQUEST PERMISSION FROM WAYNE COUNTY TO CLOSE FARMINGTON ROAD FROM LYNDON TO FIVE MILE, BETWEEN THE HOURS OF 4:00 P.M. AND 5:00 P.M., OR UNTIL THE ROAD IS RETURNED TO NORMAL TRAFFIC OPERATION; TO AUTHORIZE SENIOR POLICE OFFICER MICHAEL ARAKELIAN TO SIGN THE ROAD CLOSURE PERMIT ON BEHALFOF THE CITY, AND THAT THE CITY OF LIVONIA WILL ASSUME LIABILITY FOR ANY DAMAGE CLAIMS RESULTING FROM THE ROAD CLOSURE: Department of Parks and Recreation, re: same. (Approving)

14. REQUEST TO APPROVE PURCHASE AND INSTALLATION OF OUTDOOR IN-LINE RINK SURFACE THROUGH THE SOURCEWELL PURCHASING PROGRAM: Department of Parks and Recreation, re: to replace the existing surface of the outdoor in-line rink at the Jack E. Kirksey Recreation Center, from budgeted funds. (Approving)

15. AWARD OF BID: Department of Public Works, re: for two (2) Wachs Valve Maintenance trailers, from budgeted funds. (Approving)

16. AWARD OF BID: Department of Public Works, re: for the purchase and installation of a replacement heat pump system at the 16th District Court, from budgeted funds. (Approving)

17. REQUEST FOR AUTHORIZATION TO WAIVE THE SEALED BID PROCESS AND PURCHASE FROM SOLE SOURCE PROVIDER: Department of Public Works, re: for the purchase of stormwater, water main and sanitary manhole-related items in an amount not to exceed $150,000.00 annually, for the period of July 1, 2025, to June 30, 2026. (Approving)

UNFINISHED BUSINESS

18. SITE PLAN PETITION: Planning Commission, re: Petition 2025-03-08-03 submitted by Jonathan Tiwaini of Johnny's Express Car Wash requesting approval under Consent Judgment Case No. 2:22-cv-12734 to construct a car wash facility at 30207 Plymouth Road on the south side of Plymouth Road between Middlebelt Road and Milburn Avenue in the Northeast ¼ of Section 35.

19. AWARD OF CONTRACT: Office of the Mayor, re: pre-construction services in a not-to-exceed amount of $78,312.00 for the new Police station facilities, from budgeted funds.

20. PROPOSED AMENDMENT TO THE LIVONIA CODE OF ORDINANCE, AS AMENDED: Department of Law, re: to Section 040 of Title 13, Chapter 08 (Water Services Rates and Revenues) to provide for changes in the water service consumption rates to become effective with the first billing on or after July 1, 2025.

21. PROPOSED AMENDMENT TO THE LIVONIA CODE OF ORDINANCE, AS AMENDED: Department of Law, re: to Section 050 of Title 13, Chapter 08 (Water Service Rates and Revenues) to provide changes in the water service consumption rates to become effective with the first billing on or after July 1, 2025.

22. PROPOSED AMENDMENT TO THE LIVONIA CODE OF ORDINANCE, AS AMENDED: Department of Law, re: to Section 050 of Title 13, Chapter 28 (Industrial Waste Surcharge) to provide for changes in the industrial waste surcharge rate to become effective with the first billing on or after July 1, 2025.

23. PROPOSED AMENDMENT TO THE LIVONIA CODE OF ORDINANCE, AS AMENDED: Department of Law, re: to Section 120 of Title 13, Chapter 20 (Livonia Sewage Disposal System) to provide for changes to the sewer disposal and maintenance rates to become effective with the first billing on or after July 1, 2025.

24. PROPOSED AMENDMENT TO THE LIVONIA CODE OF ORDINANCE, AS AMENDED: Department of Law, re: Section 130 of Title 13, Chapter 20 (Livonia Sewage Disposal System) to provide for changes to the special rates for designated uses to become effective with the first billing on or after July 1, 2025.

25. ROLL CALL: Proposed Amendment to the Livonia Code of Ordinances as amended: Office of the City Clerk, re: to revise Sections to Title 1, Chapter 1.08 (Election Precincts) to maintain ballot alignment within previously consolidated precincts.
First reading given by Council Vice President Martha Ptashnik on May 19, 2025.

26. ROLL CALL: Proposed Amendment to the Livonia Zoning Ordinances, as amended: Department of Law, re: Petition 2023-09-01-05 submitted by Matick Construction, L.L.C., requesting to rezone the property at 37739 Seven Mile Road, located on the south side of Seven Mile Road between Blue Skies Drive and Glengarry Drive in the Northeast ¼ of Section 7, from N2 (Neighborhood) to C-1 (Local Business).
First Reading given by Councilmember Scott Bahr on December 4, 2023.

27. SITE PLAN PETITION: Planning Commission, re: Petition 2025-03-08-04 submitted by Leo Soave Building Inc., requesting approval to construct a one-story office building at 37739 Seven Mile Road, located on the south side of Seven Mile Road between Blue Skies Drive and Glengarry Drive in the Northeast ¼ of Section 7

NEW BUSINESS

28. REQUEST TO BARRICADE CITY STREET: Clint McDermott, re: in front of the home located at 10029 Bassett Street on Saturday, June 14, 2025, from 2:00 p.m. to 10:00 p.m., in order to host a graduation party.

29. REQUEST TO APPROVE CABLE FRANCHISE AGREEMENT BETWEEN THE CITY OF LIVONIA AND SPECTRUM MID-AMERICA, LLC, Department of Law, re: for a period of (10) ten years from the date issued.

AUDIENCE COMMUNICATION

NOTICE(S)

In accordance with Title II of the American with Disabilities Act as it pertains to access to Public Meetings, the City Clerk's Office of the City of Livonia, upon adequate notice, will make reasonable accommodations for persons with disabilities. Please call (734) 466-2236 or email clerk@livonia.gov as soon as possible if you need assistance. Council agendas are available on the City's website www.livonia.gov - under Your Government, City Council, Agendas & Minutes.

LORI L. MILLER, CITY CLERK

LETTER TO THE LIVONIA CITY COUNCIL

a.

Mayor's Office
May 9, 2025

MEETING DATE	PRESENTED BY
R060225	

AGENDA ITEM

a. ADMINISTRATIVE RESPONSE TO COUNCIL RESOLUTION 54-25: Office of the Mayor, re: the Noble Building Assessment.

BACKGROUND DETAILS

Honorable Members of the City Council, City of Livonia
RE: Council Resolution #54-25 Noble Building Assessment

Dear Council Members,

I am herewith submitting to you, the administrative response to CR #54-25. Please see this response, along with two supporting documents.

Thank you,
Maureen Miller Brosnan, Mayor

PREFERRED COUNCIL RECOMMENDATION/RESOLUTION (Please complete this field. Attachments are not to be used in lieu of the recommendation)

Receive and file

ATTACHMENTS

1. Compressed - NTH 2025
2. OHM Updated Cost Estimate 04-2023 Noble Library
3. R022425 $20K for Structural Assessment for Noble CR 54-25

APPROVED BY

Debra A. Lichtenberg

Date: May 09, 2025

Debra Peck Lichtenberg, CPA, Finance Director

Maureen Miller Brosnan

Date: May 09, 2025

Maureen Miller Brosnan, Mayor

OFFICE OF THE MAYOR

MAUREEN MILLER BROSNAN
MAYOR

33000 CIVIC CENTER DRIVE
LIVONIA, MICHIGAN 48154-3097
mayor@livonia.gov
(734) 466-2201

May 9, 2025

TO: Livonia City Council
RE: CR #54-25, Noble building assessment

In response to CR #54-25, we are sharing the attached limited Property Condition Assessment of the Noble building, produced by NTH Consultants.

Additionally, for convenience, we are providing a copy of the report provided two years ago by OHM Advisors outlining their opinion of the costs for renovations and recommendations for repairs or new construction at the Noble site.

The NTH report focuses on the structural integrity of the building. The OHM report is more comprehensive in its focus on rehabbing the building and the entire site to make it ready for occupancy.

There is some overlap in the two reports. Both identify needed repairs of perimeter foundation drains outside the footings, exterior grading and sidewalk replacement on the perimeter of the building, roof and flashing replacement, masonry wall repairs, replacement of ceilings, carpeting, and painting.

However, only the OHM report included costs for HVAC replacement, window replacement, mold remediation, electrical panel and distribution replacement, parking lot and sidewalk removal/replacement, storm sewer and underground detention, site grading, landscaping and buildout and electrical distribution for a new bathroom (current standards).

In order to make the estimates comparable, we asked Engineering to look at renovations that were missing from the NTH report. They estimate that the costs of HVAC and electrical would add $1,750,000 to $2,000,000, and replacing windows and associated items would add about $250,000 to the building renovation estimate ($787,670). Those estimates put the NTH proposed cost at about $3,000,000 for building renovations. OHM's building renovation estimate was $2,835,000 (in 2023).

As a point of perspective on this report, the Noble building was closed in 2019 due to the presence of mold. At the time, it was open three days a week. The Covid-19 pandemic and subsequent shutdowns arrived a few months later, creating a new, laser focus for the Administration as we created Together Livonia Cares to provide testing, vaccines and support in response to the deadly outbreak in our community. This became a significant priority over those next two years. We believe it is now time to take a fresh look at the Noble site.

We appreciate the time and attention Council has placed in understanding the condition of the Noble building and look forward to working with Council to determine the most appropriate use for the site moving forward. To that end, we recommend the following next steps:

1. Continue efforts to properly mothball the building -- Update the condition assessment of the building provided by OHM, stabilize the exterior, provide some kind of interior ventilation, secure the building from vandals, break-ins and natural disasters, and provide regular surveillance and monitoring.

2. Engage in a community-led strategic planning process to determine the future use of the Noble site. The time is right to advance the visioning process for this section of Plymouth Road, using the process and principles embodied in Livonia Vision 21.

Estimated costs for both of these items will be included in the 2025-26 budget for your review and approval.

Sincerely,

Maureen Miller Brosnan

Maureen Miller Brosnan
Mayor

Cc: Department of Public Works
Engineering
Library
Finance
Planning
Inspection

NTH Consultants, Ltd.
Infrastructure Engineering
and Environmental Services

41780 Six Mile Rd., Suite 200; Northville, MI 48168
Phone 248-553-6300• Fax 248-324-5179

Mr. David Lear, P.E.
Assistant City Engineer
City of Livonia / Engineering
33000 Civic Center Drive
Livonia, Michigan 48154

April 25, 2025
NTH Project No. 23001529-02

RE: Limited Property Condition Assessment
Noble Library Building
32901 Plymouth Road
Livonia, Michigan

Dear Mr. David Lear:

On behalf of the City of Livonia (City), NTH Consultants Ltd. (NTH) has completed a limited Property Condition Assessment (PCA) of the Noble Library Building in Livonia, Michigan. NTH conducted a visual review of the building and assessed visible conditions relative to the building's structural system, façade/fenestrations, interior construction / finishes, sidewalks, and general site conditions.

Our services were performed in general accordance with the scope and limitations of ASTM 2018, "Standard Guide for Property Condition Assessments: Baseline Property Condition Assessment Process" including a non-destructive visual review of accessible features and finishes, analysis of our collected field data, and preparation of this letter report.

The following sections describe NTH's understanding of the project background, our assessment procedure, a summary of our findings, our conclusions and recommendations for conceptual repairs / corrective measures, and conceptual level quantities. Additionally, we have prepared an engineer's opinion of probable costs, based on our observations, conclusions, and recommendations.

BACKGROUND

The subject property is the Noble Library Building, at 32901 Plymouth Road, Livonia, Michigan. The library is a one-story building with a basement and is situated on developed land with parking lots, sidewalks, and sewer systems. Based on the historical information provided, the building was built circa 1965. Overall, the footprint of the building is approximately 12,600 square feet. The main floor area comprises approximately 12,533 square feet and the basement comprises approximately 1,693 square feet. The building has been closed since 2019 due to water infiltration and mold issues.

The building's basement houses a meeting room, storage room, and mechanical room. The building's main floor level consists of a juvenile reading room, an adult reading room, a lounge and meeting area, working rooms, men, women and family rest rooms, janitor room, librarian working area, and corridors.

ASSESSMENT PROCEDURE

NTH conducted a walkthrough of the building to perform a non-destructive visual assessment of the subject property on April 16, 2025, accompanied by City of Livonia facilities staff.

The objective of the walkthrough was to gain familiarity with the building layout, its systems and site features, and identify apparent deficiencies including deterioration, defects, and items of significant concern.

NTH's assessment team photographed and documented apparent defects of the building's interior spaces during the walkthrough. NTH also performed inspection of the roof area using a drone.

Additionally, NTH conducted a visual inspection of the building's exterior façade system, sidewalks, and site features; photographed and documented observed defects, and collected exterior dimension measurements.

SUMMARY OF FINDINGS

NTH's observations of significant defects, and recommendations are described below. Representative photos of the building basement and main floor observations can be found in Appendix A. Raw photos are provided in an electronic file.

Inside Building Observations

At the Basement Level we noted:

1. A layer of water and sludge covering the basement floor, hindering the visual inspection. The exposed areas of the concrete floor appear to be in good shape with no cracks identified. (Photo No. 4679)
2. The basement wall has mold and water damage. The water infiltration appears to be coming from both the external walls and from the top of the wall/ceiling from the main floor. (Photo Nos. 4680-4685)
3. Corrosion on the bottom of the metal doors and door frame at the base section. (Photo No. 4695)
4. Corrosion on steel members supporting equipment. (Photo No. 4725)
5. Water marks on the ceiling due to pipe openings with 90-degree bends facing the ceiling. (Photo Nos. 4706-4707)
6. A running water mark on the wall. (Photo No. 4730)
7. Surface corrosion on the exposed steel beams. (Photo Nos. 4733, 4745)
8. One crack on the main floor slab. (Photo No. 4710)
9. The handrail is starting to corrode. (Photo No. 4690)
10. The kicker plate is falling off along the perimeter of the meeting room wall. (Photo Nos. 4686, 4691)
11. Cracks on the wall in the stairwell. (Photo Nos. 4746, 4749)

On the Main Floor we noted:

1. The carpet appears to be dirty and there are stockpiles of damaged ceiling material, insulation, and garbage. (Photo No. 4885)
2. Mold appears on most of the wall surfaces. (Photo No. 4773)
3. Mold and water marks appear on most of the ceiling area (Photo Nos. 4837-4845)
4. The door lock to janitor room is damaged. (Photo No. 4766)
5. There is wood paneling detaching from the wall near the reception desk. (Photo Nos. 4782-4783)
6. An air vent panel detached and on the ground. (Photo No. 4785)
7. In Librarian Room No. 1, three (3) major cracks/fractures on the concrete masonry unit (CMU) wall with gaps of approximately 0.14 inches. Cracks start from two (2) feet above the floor and extend beyond ceiling elevation. (Photo Nos. 4816-4823)
8. Cracks on the dry wall, close to the ceiling, in the east corridor. (Photo Nos. 4825, 4851)
9. The exposed structural steel beams appear to have rust. (Photo No. 4826)
10. Ponding water in the back Lounge and the Adult Reading Room. (Photo Nos. 4830, 4892)
11. Vertical cracks on walls in the rear lounge, the expansion joints along the north wall of the Juvenile Reading Room, and near the ceiling of the Juvenile Reading Room. (Photos 4836, 4846,4854, 4922, 4935)
12. Wall paint water damages at several locations throughout the building. (Photo Nos. 4848, 4898)
13. Cables securing light fixtures appear to be corroded. (Photo No. 4852)
14. Exposed wood joists appear to be experiencing cycling of dry and wet and mostly appear to be dark on surface with possible mold. However, they seem to be structurally good for service. (Photo No. 4863)
15. Plywood board panels seem to be impacted by water. (Photo No. 4888)
16. The heating board is detached from the wall in the Adult Reading Room. (Photo No. 4877)
17. Insulation damage in most exposed areas. (Photo No. 4890).
18. Ceiling material damage in many areas of the ceiling in the main rooms of the building. Falling ceiling or water marks appear everywhere. (Photo No. 4803)
19. Kicker plate is detached from the wall in the northwest corner of the Adult Reading Room. (Photo No. 4897)
20. Moisture in many of the windows throughout the building, indicating window seals that are beyond their useful lifespan. (Photo No. 4981)

Building Exterior Observations

In the exterior area we noted**:**

1. Brick damage due to weathering. (Photo Nos. 5005-5006, 5030-5031, 5040-5042, 5051)
2. A depression area near a down spout discharge area. A water flow channel due to seepage was formed in the same area. There is no positive drainage at this location. (Photo Nos. 5043-5044).

3. Mortar and expansion joint damages due to weathering effects around the perimeter of the building. (Photo Nos. 5008,5010, 5013, 5017, 5018, 5019, 5052).
4. The sealant around some of the doors was beyond its useful lifespan. (Photo No. 5009).
5. Down sprout bottom section was missing. (Photo No. 5015)
6. Electrical outlet covers were missing at one location. (Photo No. 5020).
7. Concrete block damage for entrance on the northeast side of the building. (Photo No. 5021)
8. The sealant around the windows was beyond its useful lifespan. (Photo Nos. 5022-5024)
9. Site grading issues along the west side of the north wall of the building, causing drainage issues. (Photo Nos. 5025, 5027, 5029, 5033, 5048-49)
10. Animal hole near the northwest door to the building. (Photo Nos. 5035-5037)
11. A separation in the concrete sidewalk at the entrance to the yard at the northwest corner of the building. (Photo No. 5038)
12. Water marks on brick, implying overflow from the eavestrough.
13. A sidewalk crack on the south side of the building. (Photo No. 5055)
14. Flash deformation along the south roof line of the building. (Photo No. 5056)
15. Door trim damage at the west entrance door. (Photo No. 5045)

Representative photos of the building exterior observations can also be found in Appendix A.

Roof Inspection with Drone:

On the Flat Roof-Parking Lot Side we observed:

1. Tree leaves on flat roof and eavestrough. (Flat Roof Nos. 1, 43)
2. Damage of side edge. (Flat Roof Nos. 7-10, 12)
3. Shingle damage. (Flat Roof Nos. 11, 13, 25, 26)
4. The flat roof has ponding water. (Flat Roof Nos. 19, 22-24, 50, 56)
5. Settlement of roof area. (Flat Roof No. 24)
6. Flash panel damage. (Flat Roof Nos. 47-48, 51)

On the Flat Roof - Plymouth Roadside we identified:

1. Tree leaves on flat roof and eavestrough. (Flat Roof Nos. 1, 23, 45)
2. The flat roof has ponding water. (Flat Roof Nos. 1-5, 21, 62, 71)
3. Flash panel damage detachment. (Flat Roof Nos. 24, 33, 61)
4. The drainage inlet was blocked with tree leaves. (Flat Roof No. 47)
5. Sealing strip detachment. (Flat Roof Nos. 29, 37).
6. Sealing issue. (Flat Roof No. 31)
7. Holes on flat roof. (Flat Roof Nos. 35, 49)

On the Flat Roof - Woodring Ave side we noted:

1. Tree leaves on flat roof and eavestrough. (Flat Roof Nos. 28, 29, 40)

2. Sludge accumulation around drain inlet. (Flat Roof No. 6)
3. Damage of side edge. (Flat Roof Nos. 30, 31, 32)
4. The flat roof has ponding water. (Flat Roof Nos. 3, 9, 25, 26, 27, 33, 34-43, 44)
5. Flash panel damage detachment. (Flat Roof No. 45)
6. Sealing strip detachment. (Flat Roof Nos. 7, 10, 11, 13, 18, 20, 21, 22).
7. Shingle damage. (Flat Roof Nos. 30-31)

On the Shingle Roof - Loveland St. Paring Lot we found:

1. A loose piece of shingle (Shingle -Loveland/Parking Nos. 1, 40, 44)
2. Shingle detachment (Shingle -Loveland/Parking No. 13)
3. Damage of shingle piece (Shingle -Loveland/Parking Nos. 16, 36, 47)
4. Cracks on shingles (Shingle -Loveland/Parking Nos. 25-26)
5. Detachment of shingle was found (Shingle -Loveland/Parking Nos. 27, 40)

On the Shingle Roof - Woodring Ave we observed:

1. Loose piece of shingle. (Shingle Area No. 1.)
2. Damage of shingle piece. (Shingle Woodring Ave Nos. 7, 8)
3. Cracks on shingles. (Shingle Woodring Ave No.)
4. Detachment of shingle. (Shingle Woodring Ave No. 10, 11, 15)
5. Drain Inlet was clogged with tree leaves. (Shingle Woodring Ave No. 21)

Photos of the typical conditions of the roof are included in Appendix A.

As indicated previously, raw inspection photos are available digitally for reference. A map showing the damage of the building is included in Appendix B.

RECOMMENDATIONS

The followings are our Recommendations:

Roof and Ceiling:

1. Replace the roof completely including the flat roof area. Based on email communication with Owner, the roof is more than 35 years old. The typical shingle roof's service life is approximately 20-25 years. In addition, it is apparent that there is a lot of water penetration and infiltration through the roof. Our inspection photos also show deterioration of roof in both shingle areas and flat roof areas. Additionally, we recommend that for flat roof area, the drainage be improved or modified with necessary slope toward the drain inlets.
2. Repair damaged flash panels.
3. The condition of the plywood boards underneath the roof is unknown. Based on the visibly water-damaged areas of the ceiling, there are significant areas of plywood that have been exposed to moisture for several years. The City should include an allowance for plywood board replacement at 30-50% of the total area.

4. Insulation under the roof appears to be in bad condition for the areas exposed. It likely has mold due to moisture accumulation within the insulation material. All insulation should be replaced.
5. The ceiling of the entire building will need to be replaced due to considerable damage and mold issues. This includes both the drop ceiling and drywall portions of the ceiling.
6. Structural steel appears to have been exposed to moisture also, and the surface will need to be sand blasted and coated with a zinc-rich primer.
7. Wood truss structures appear to be in good condition. However, the wood truss structure will need to be inspected closely after the structures are exposed with roof and ceiling removal. We recommend that City set an allowance for minor wood truss structural repair.

Main floor walls:

1. The cracks on the walls can be repaired with epoxy injection. All internal wall areas need to be repainted after the mold issue is completely resolved.
2. Damaged portions of flashing and sealant of windows should be replaced.
3. Most of the windows appear to be in good to fair conditions. Some of the windows will need to be treated to remove moisture and sealed off properly. The City can develop an O&M plan to maintain or repair, as necessary. No cost is included in this report for window maintenance, and we recommend that the City establish O&M budget for this portion.

Floor:

1. The whole main floor carpet should be replaced completely due to mold concern. Additional inspection of the sub-floor will need to be completed due to the potential for mold growth underneath the carpet.
2. One wood flooring panel will need to be restored to match the existing.
3. The crack on one precast concrete floor panel will need to be repaired via epoxy injection.

Basement:

1. The basement ceiling will need to be completely replaced due to water damage, aging, and mold issues.
2. The basement walls will need to be repainted after the mold issue is resolved.
3. Install an exterior perimeter drainpipe around the basement exterior wall. Water from the drainpipe can be discharged to an indoor sump pump as an economical solution or connected into a nearby storm sewer system. Also, a layer of water barrier will need to be installed on the exterior face of the perimeter wall to prevent water infiltration. Based on our observation, the water infiltration not only comes from the roof but also from the exterior basement walls of the building. It is evident that there is a lack of positive drainage around the building causing water penetration into the basement. Perimeter drainpipe will need to have gravel bedding wrapped with geotextile. After the moisture barrier is installed, the trench will be backfilled and compacted. Disturbed areas will need to be restored.
4. It would be difficult to install the drainpipe and moisture barrier on the north wall since it is within the building area. We would expect that the water infiltration from the north wall would stop with proper site drainage improvement to achieve positive drain. If not, internal vapor barrier with floor trench drainpipe will need to be installed. This will require cutting the concrete floor at the toe of exterior wall by around six (6) inches wide and eight (8) inches deep to install a 4-inch perforated pipe and backfill with gravel to drain the infiltrated water to the existing pump sump. Further investigation may need to be completed to confirm

whether a drainpipe would be required or not for the north wall.

5. A maintenance free dehumidifier should be installed in the basement to ensure an acceptable moisture level in basement to prevent future mold issues. However, this is part of the mechanical cost item related to HVAC and the cost is not included in our engineering estimate in this report.
6. The area within ten (10) feet from the perimeter of the building needs to be re-graded to achieve positive drain. After regrading, the site should be sodded.
7. Replace all kicker plates.
8. Sand blast handrails and coat with zinc rich primer.
9. Sand blast steel beams and coat with zinc rich primer.

At the time of the site visit and inspection, the basement floor was still wet and covered with a layer of sludge, as a result, it was not possible to confirm if there was any water infiltration through the basement floor or not. Based on the available record drawings, a vapor barrier was not installed during construction; this poses a substantial risk if there is a shallow ground water table under the basement. Our engineering probable cost estimate does not include the mitigation of basement floor water-sealing due to unknown conditions.

Building Exterior wall:

1. Repair exterior brick wall, epoxy grout or motor grout all cracks grouted to seal off water.
2. Treat the animal hole properly with backfilling.
3. Repair concrete damage at the entrance.
4. Repair concrete walkways.

Additional works by others:

The following work items are beyond the scope of this project. The City may need to retain other professionals, specifically:

1. Mechanical Engineer to evaluate HVAC systems, piping, toilets and determine the scope of work for repair of replacement and moisture control of the building.
2. Electrical Engineer to evaluate electrical and control system and determine the scope of work for repair or replacement.
3. Mold remediation professional to evaluate and determine the scope of work to resolve mold issues.
4. Additionally, we recommend City to assign budget for necessary furniture replacement.

To assist you with the decision regarding the building's rehabilitation, we have developed a conceptual-level Engineer's Opinion of Probable Cost Estimates for the suggested repairs as shown below.

Please note that NTH's cost estimate **does not** include mold treatment, mechanical, electrical and control items. Replacement of furniture is also not included in this estimate. As discussed above, the City will need to retain other professionals to perform an evaluation for these items.

NTH's cost estimate is for preliminary purpose only. For construction cost, we recommend that an RFP package be prepared and issued for competitive prices. We can assist the City with developing an RFP package under a separate scope of work.

COST ESTIMATE

Item	Description	Item Detail Cost	Item Sub total
1	**Roof and Ceiling**		**$ 361,447**
1.1	Roof replacement	$ 171,451	
1.2	Damaged flash panel replacement	$ 800	
1.3	Plywood board replacement (30% of roof)	$ 18,800	
1.4	Roof insulation replacement	$ 100,264	
1.5	Ceiling replacement	$ 50,132	
1.6	Steel structural coating	$ 10,000	
1.7	Wood truss structures repair	$ 10,000	
2	**Main Floor Wall**		**$ 77,250**
2.1	Wall crack repair	$ 4,800	
2.2	Window flashing and sealant	$ 450	
2.3	Wall repainting	$ 72,000	
3	**Floor**		**$ 113,997**
3.1	Carpet replacement	$ 112,797	
3.2	Wood panel restoration	$ 1,000	
3.3	Precast concrete crack repair	$ 200	
4	**Basement**		**$ 155,976**
4.01	Basement ceiling replacement	$ 2,916	
4.02	Basement wall repainting	$ 12,960	
4.03	Basement exterior perimeter drain pipe installation	$ 22,800	
4.04	Basement wall exterior site regrading	$ 90,000	
4.05	Basement wall exterior moisture barrier installation	$ 7,500	
4.06	Basement Interior Vapor barrier Installation	$ 3,800	
4.07	Basement concrete trench and drain pipe installation	$ 3,800	
4.08	Basement vapor barrier protection wood panel finish	$ 7,600	
4.09	Stair well wall crack repairs	$ 1,600	
4.11	Kicker plate replacement	$ 500	
4.12	Handrail coating	$ 500	
4.13	Steel beam coating	$ 2,000	
5	**Exterior Area**		**$ 9,000**
5.1	Exterior brick wall repair	$ 5,000	
5.2	Animal hole treatment	$ 1,000	
5.3	Concrete damage repair	$ 1,000	
5.4	Concrete walkway repair	$ 2,000	
6	Contractor Mob/Demo	$ 20,000	**$ 20,000**
7	Building waste disposal	$ 50,000	**$ 50,000**
	Subtotal:		**$ 787,670**
	Contingency (30%)		**$ 236,301**
	Engineering services		**$ 39,383**
	Construction management services		**$ 70,890**
	Total:		**$ 1,134,245**

CONCLUSION

Based on our review of the subject property, we consider the buildings' structure system to be in fair to bad condition after 60 years of service and several years of exposure to weather conditions. Significant renovation work will need to be completed to extend the building's life. The following is a summary of our findings.

- No major issues were identified for the building foundation except ground water infiltration. As such, we proposed a water/vapor barrier and perimeter drainpipe be installed for the basement area. Site re-grading to achieve positive drain will need to be done to prevent future infiltration.
- Mold in the building will be the major concern; we recommend that City hire qualified mold remediation experts to resolve the mold issue.
- The roofing system is beyond its service life. We recommend the complete replacement of the roof and modifications to ensure a positive drain in the flat roof area. Eavestrough and roof drains will need to be inspected seasonally. We also recommend partial replacement of the plywood board layer, and complete replacement of insulation of the building.
- We recommend complete replacement of the ceiling for both the main floor and basement as these are contaminated with mold and in extremely bad condition.
- We recommend that the internal wall be repainted after the mold issue is resolved.
- We recommend that an allowance be set aside for possible structural repairs of the truss system and steel beams.
- We recommend all damages as identified in this report be repaired properly.
- Our conceptual-level Engineer's Opinion of Probable Cost Estimates for the suggested repairs and remediation is in the order of $1,135,000.

We appreciate the opportunity to be of service to you. Should you have any questions, please contact Zonghua Chen at 248-916-6877.

Sincerely,

NTH Consultants, Ltd.

Signed by:
Zonghua Chen
E6DE47F783E346C...
Zonghua Chen
Principal Engineer

Signed by:
KgdOkonta
2261F01909FB41F...
Karen W. Okonta
Project Manager

ZC/KO/dc

Attachments
Appendix A: Photo Log
Appendix B: Field Schematic Drawings

APPENDIX A

Site Visit Photos

PHOTO LOG

Basement:

Basement Ceiling – Mold (Photo No. 4682)

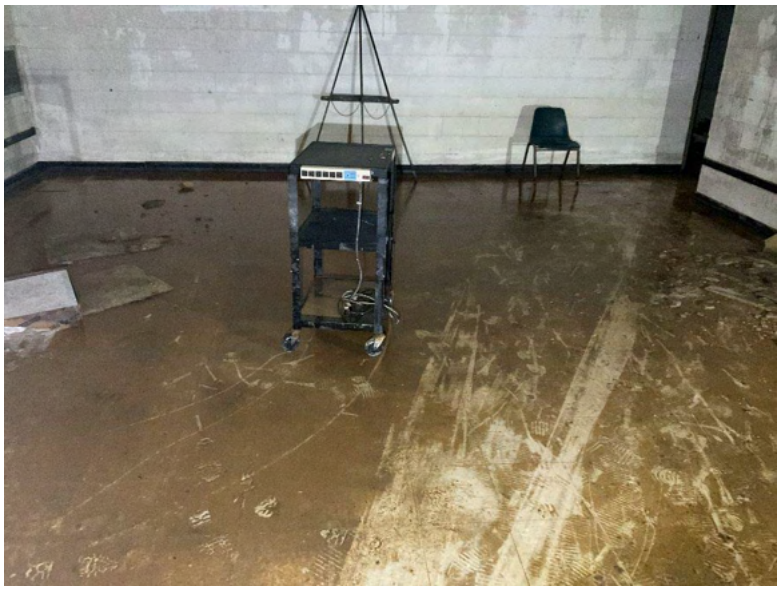

Basement Floor – Sludge (Photo No. 4679

Basement – Ceiling panel missing (Photo No. 4684)

Basement – Kicker plate (Photo No. 4691)

Basement Wall - Paint damage and mold (Photo No. 4718)

Basement Wall – Mold (Photo No. 4719)

Basement wall – Moisture Infiltration (Photo No. 4688)

Basement Ceiling – Water infiltration from first floor (Photo No. 4696)

Basement Wall Mechanical Room – Walter infiltration through wall (Photo No. 4716)

Basement – Mechanical Room floor (Photo No. 4723)

Basement – Steel beam corrosion (Photo No. 4733)

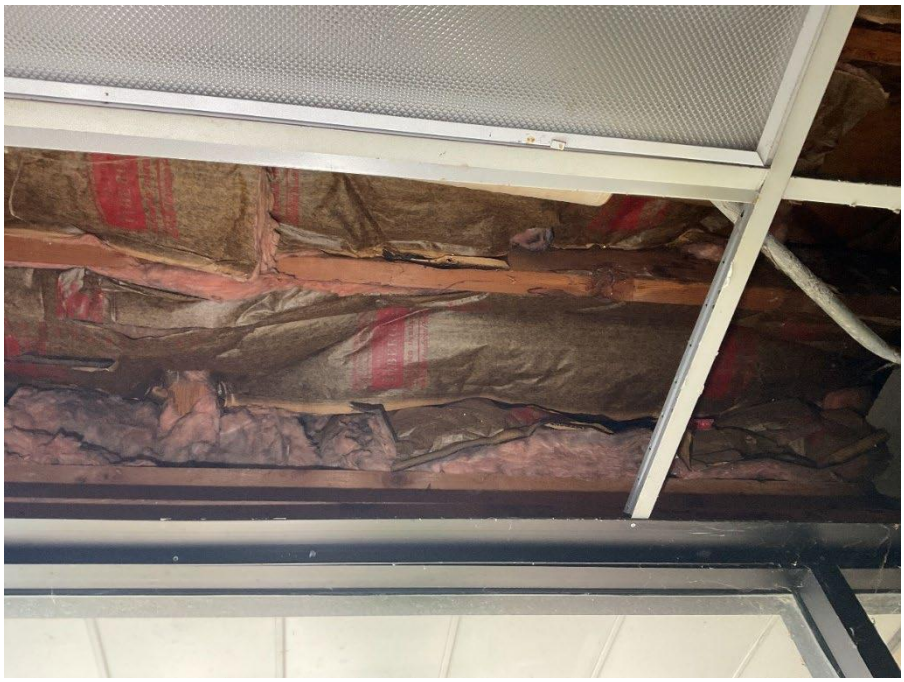

Basement Ceiling – Damage insulation with mold (Photo No. 4754)

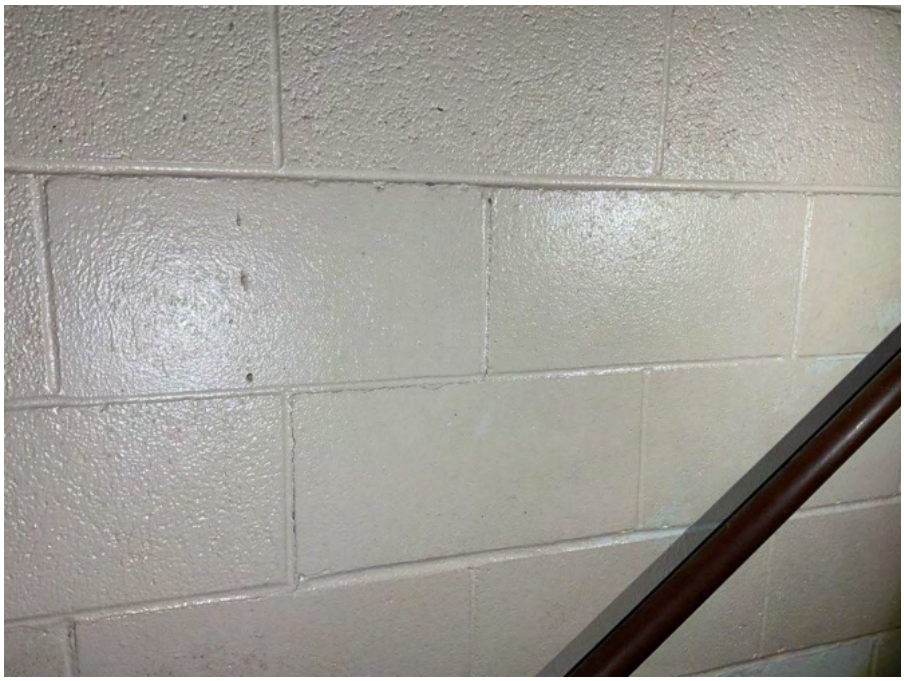

Stair Well – wall cracks/rusty handrail (Photo No. 4749)

Main Floor:

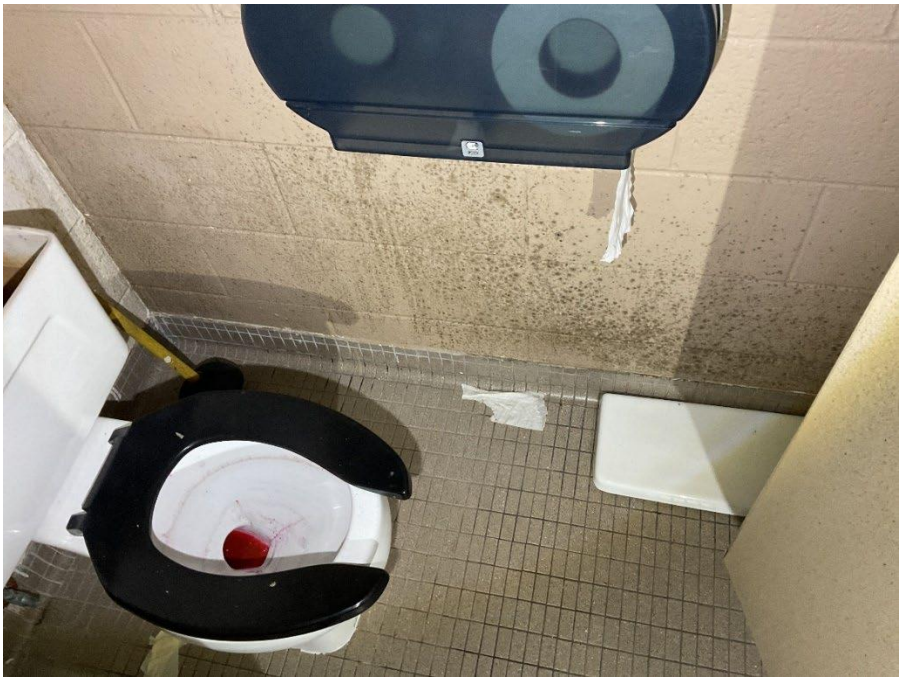

Main Floor Restroom – Mold on wall (Photo No. 4759)

Main Floor Janitor Room – Lock damage / mold on wall (Photo No. 4766)

Main Floor Carpet – Mold and stockpiled with ceiling material (Photo No. 4784)

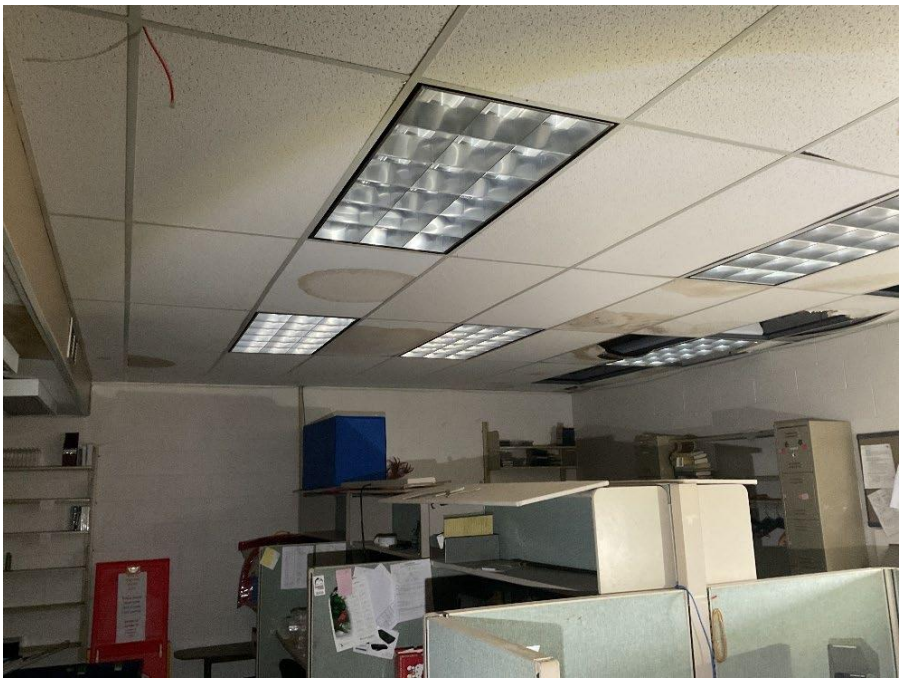

Main Floor Work Room Ceiling - Water damage (Photo No. 4800)

Main Floor Work Room Ceiling - Water damage (Photo No. 4804)

Main Floor – Librarian Room – Cracks on wall/ water damage on ceiling (Photo No. 4822)

Main Froor Lounge Room – Water mark on floor (Photo No. 4831)

Main Floor Ceiling – Typical water damage (Photo No. 4838)

Main Floor – steel beam corrosion (Photo No. 4840)

Main Floor Wall – Water damage (Photo No. 4848)

Main Floor Ceiling - Mold (Photo No. 4852)

Main Floor Lounge – Ceiling damage/Insulation damage/ mold on wall (Photo No. 4863)

Main Floor – Heating panel damage (Photo No. 4876)

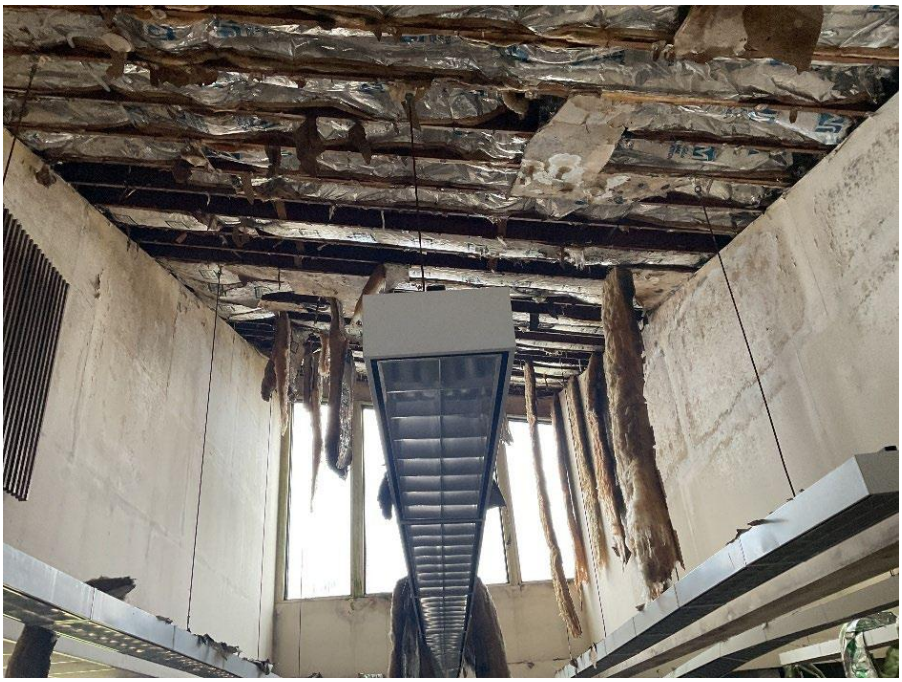

Main Floor - Ceiling damage (Photo No. 4880)

Main Floor – Floor Conditions (Photo No. 4885)

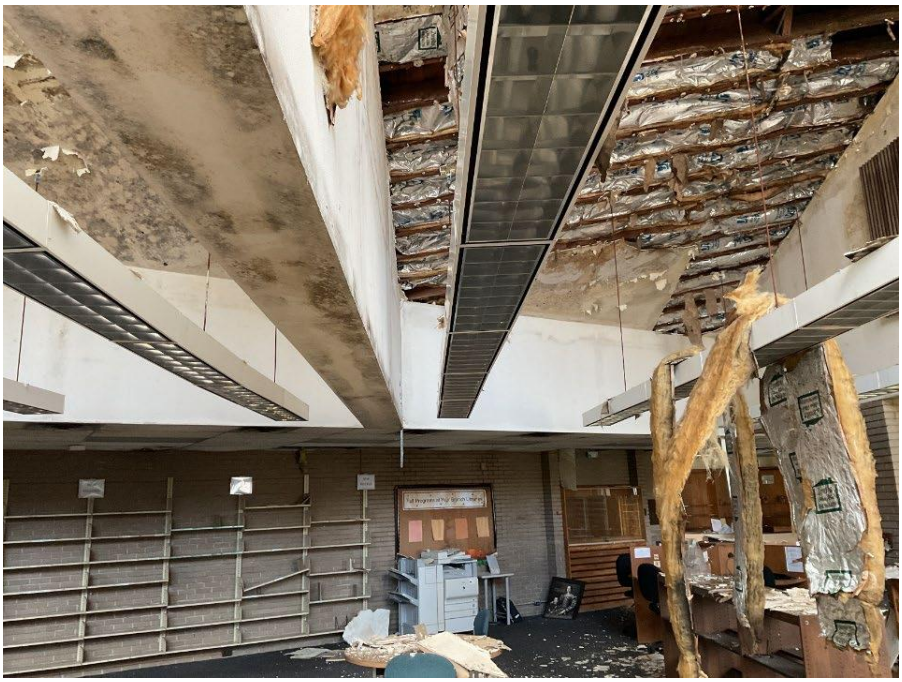

Main Floor - Ceiling damage/ Insulation damage (Photo No. 4896)

Main Floor – Kicker plate damage (Photo No. 4897)

Main Floor - Ceiling damage/ insulation damage/ mold (Photo No. 4903)

Main Floor – Ceiling mold (Photo No. 4911))

Main Floor Adult Reading Room – Wall crack (Photo No. 4921)

Main Floor – Floor conditions (Photo No. 4967)

Main Floor – Floor conditions (2) (Photo No. 4975)

Main Floor – Moisture in windows (Photo No. 4981)

Building Exterior:

Exterior Wall - Brick damage (Photo No. 5005)

External Area - Down sprout drain with no positive drain on ground (Photo No. 5007)

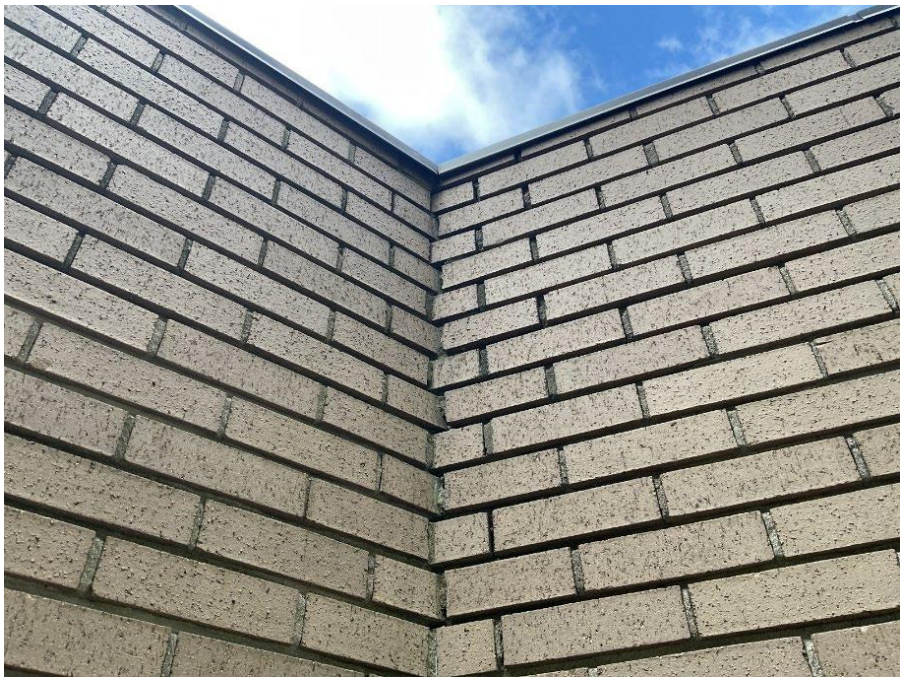

Exterior Wall – Mortar damage (Photo No. 5008)

Exterior Area - Down sprout loose bottom section (Photo No. 5015)

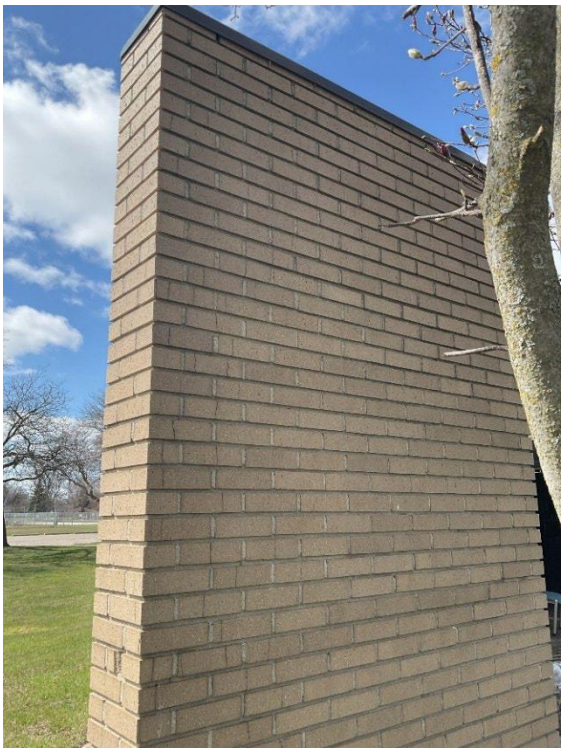

Exterior Wall – Brick damage (Photo No. 5018)

Electrical Outlet – Loose cover (Photo No. 5020)

External Area – Concrete damage (Photo No. 5021)

Exterior - Window seal damage (Photo No. 5022)

External Area - Evidence of water seepage at toe of wall (Photo No. 5025)

External Area – Local depression area due to drainage (Photo No. 5029)

External Area – Brick damage (Photo No. 5030)

External Area – Brick damage (Photo No. 5031)

External Area – Animal hole (Photo No. 5035)

External Area – Concrete damage (Photo No. 5038)

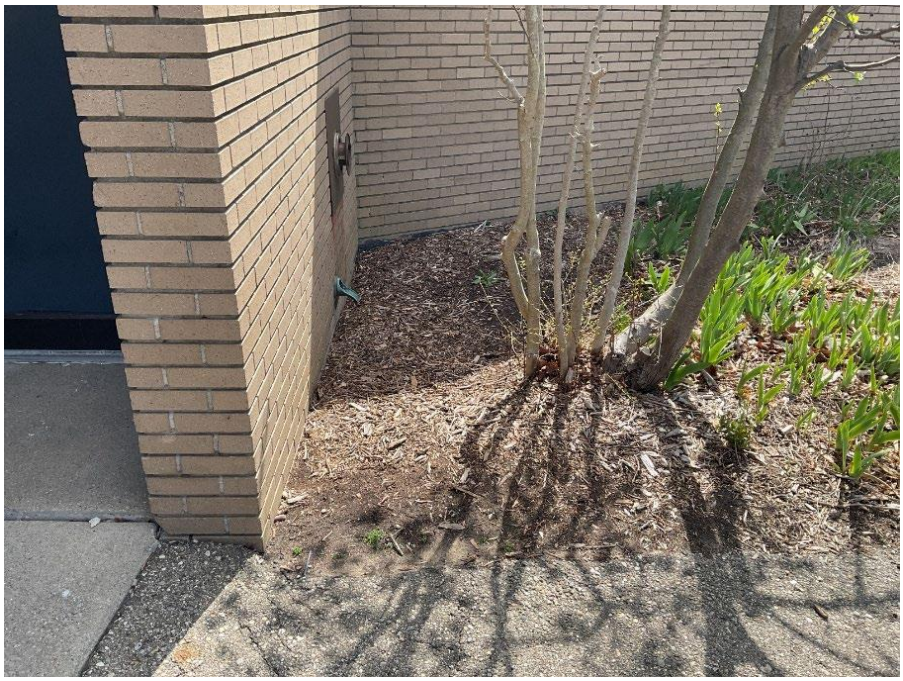

External Area – Depression area, lack of positive drainage (Photo No. 5048)

Exterior Area – Depression area, luck of positive drain (Photo No. 5049)

Exterior area: walkway concrete damage (Photo No. 5055)

Roof:

Flat Roof – Stockpile with tree leaves (Parking Lot Side Photo No. 1)

Flat Roof – Luck of positive drain (Parking Lot Side Photo No. 20)

Flat Roof – Damage at the curb connecting to shingle roof, lock of positive drain (Parking Lot Side Photo No. 23)

Flat Roof – Damage at patching (Parking Lot Side Photo No. 39)

Flat Roof- Damage at edge (Parking Lot Side Photo No. 51)

Flat Roof – Water ponding/ Lack of positive drain (Parking Lot Side Photo No. 56)

Flat Roof – Holes at edge (Plymouth Rd Photo No. 15)

Flat Roof – Potential drain inlet clog (Plymouth Rd Photo No. 23)

Roof – Loose flash panel (Plymouth Rd Photo No. 24)

Flat Roof – Damage of patching repair (Plymouth Rd Photo No. 29)

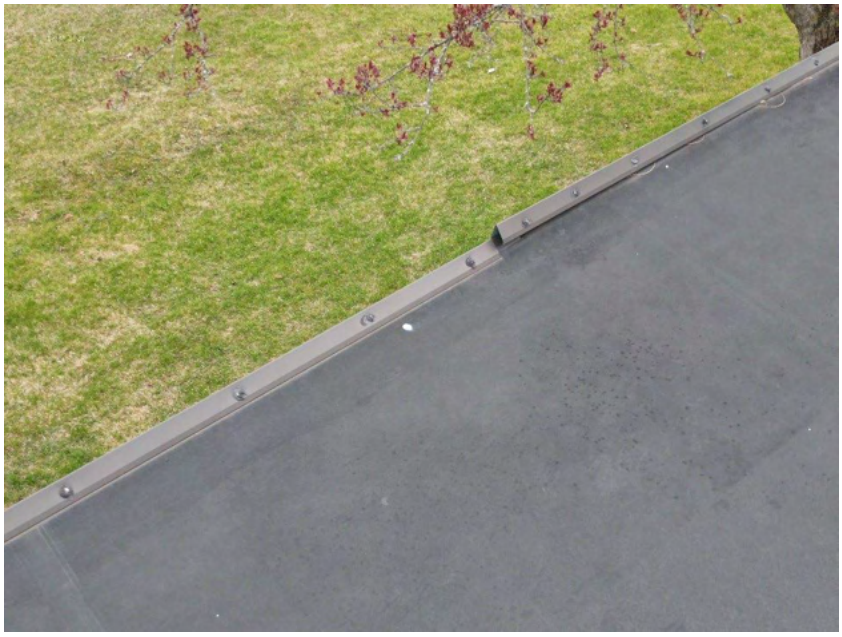

Flat Roof – Loose flash panel (Plymouth Rd Photo No. 33)

Flat Roof -Water ponding (Plymouth Rd Photo No. 71)

Flat Roof – Lack of positive drain (Woodring Ave Photo No. 2)

Flat Roof – Damage of patching (Woodring Ave Photo No. 8)

Shingle Roof – Loose piece (Loveland St and Parking Lot Photo No. 1)

Shingle Roof – Damaged shingle (Loveland St and Parking Lot Photo No. 37)

Shingle Roof – Loose shingle piece (Loveland St and Parking Lot Photo No. 39)

Shingle Roof – Damaged shingle piece (Loveland St and Parking Lot Photo No. 47)

APPENDIX B

Noble Library Record Plan Set

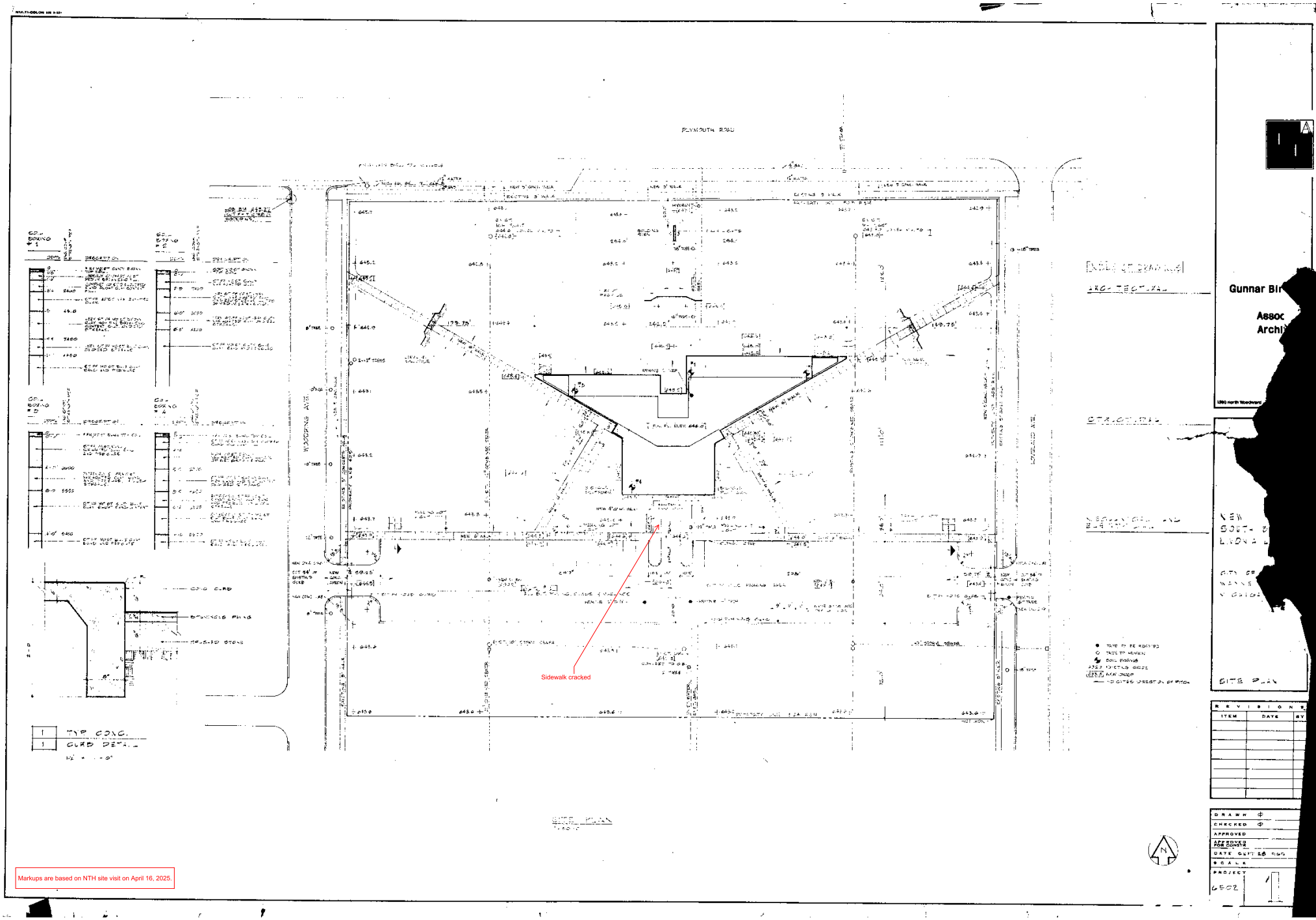

Markups are based on NTH site visit on April 16, 2025.

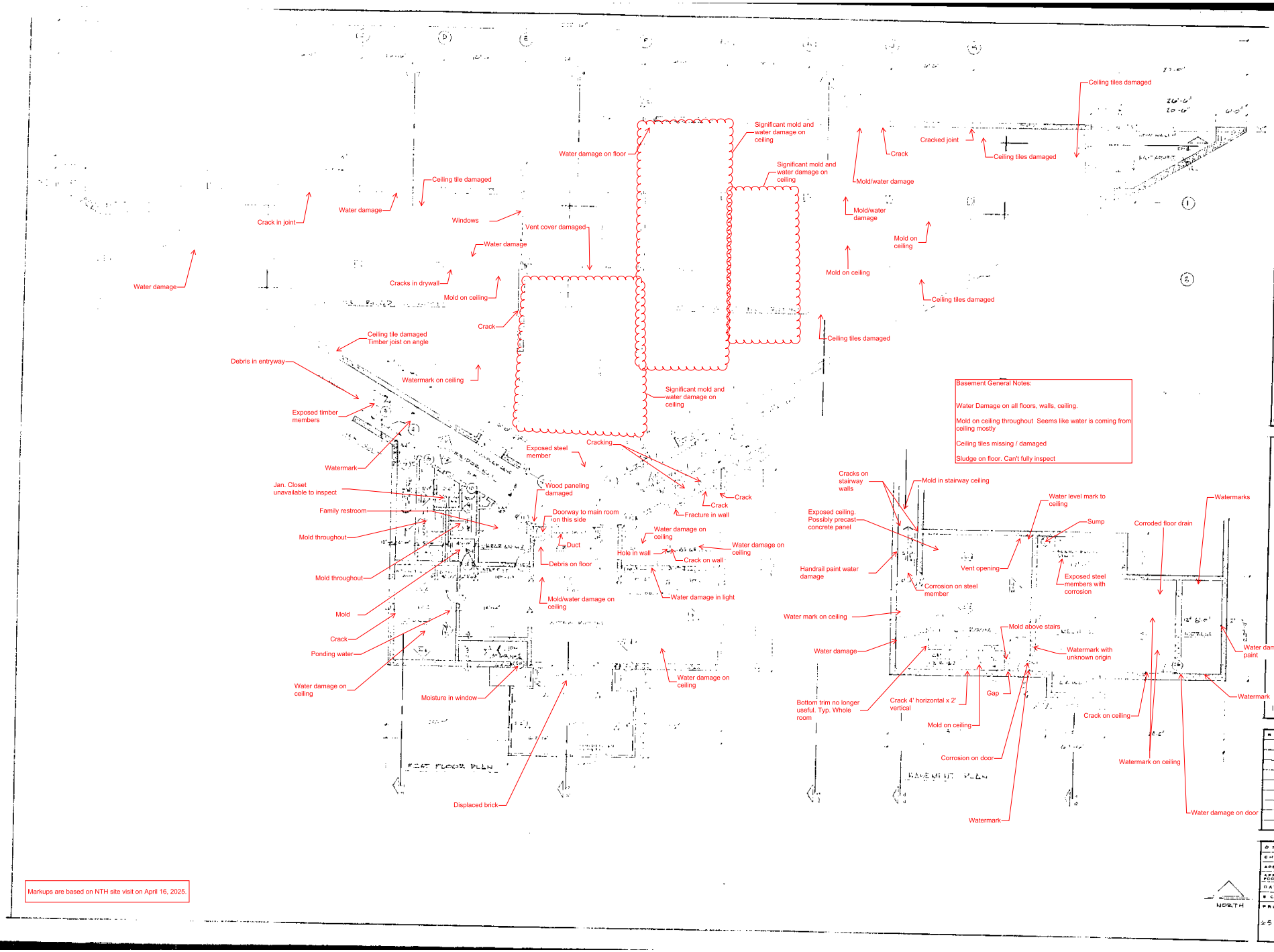

Markups are based on NTH site visit on April 16, 2025.

Gunnar Birkerts and Associates Architects

1st Floor Plan

ITEM	DATE	BY

DRAWN
CHECKED
APPROVED
APPROVED FOR PRINT
DATE
SCALE
PROJECT

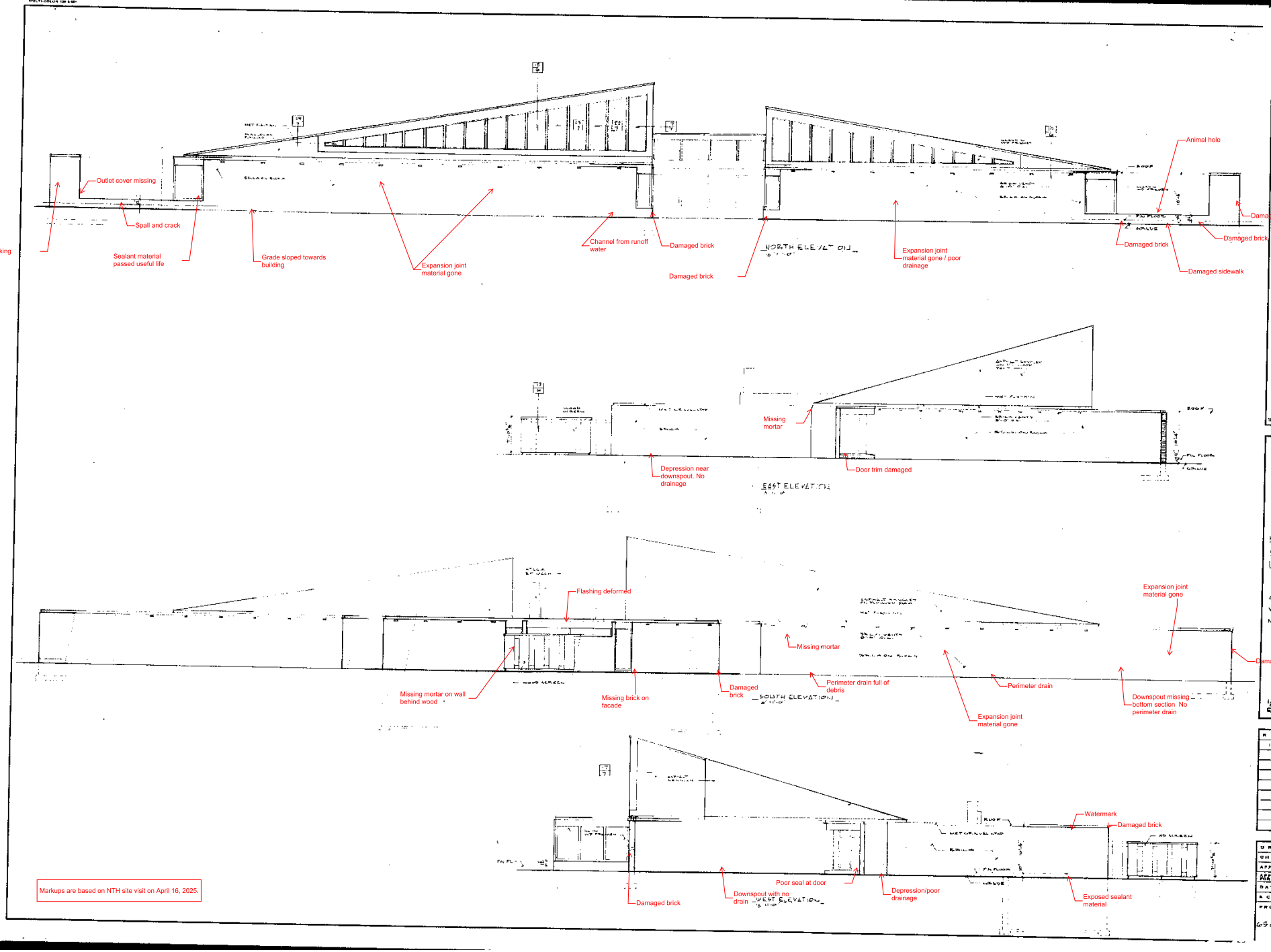

Markups are based on NTH site visit on April 16, 2025.

Gunnar Birkerts and Associates Architects

NEW SOUTH BRANCH LIVONIA LIBRARY

CITY OF LIVONIA
WAYNE COUNTY
MICHIGAN

EXTERIOR ELEVATIONS

REVISIONS		
ITEM	DATE	BY

DRAWN
CHECKED
APPROVED
APPROVED FOR CONSTR.
DATE SEPT. 15, 1965
SCALE
PROJECT 6502

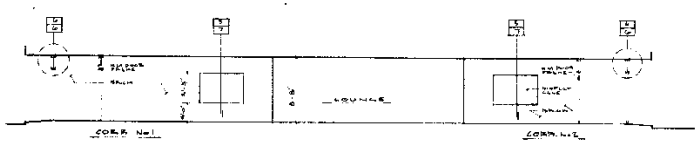

ELEVATION 1-6

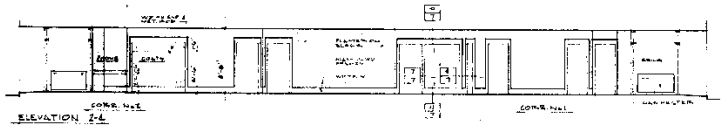

ELEVATION 2-6

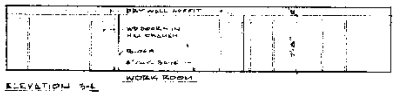

ELEVATION 3-6

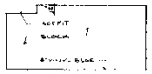

ELEVATION 4-6

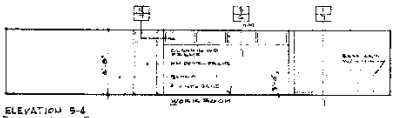

ELEVATION 5-6

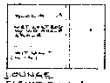

LOUNGE ELEVATION 6-6

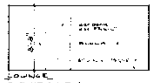

LOUNGE ELEVATION 7-6

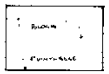

LOUNGE ELEVATION 8-6

MEWS T. ELEVATION 9-6

MEWS T. ELEVATION 10-6

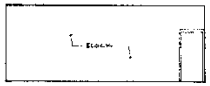

MEETING ROOM ELEVATION 11-6

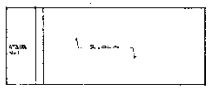

MEETING ROOM ELEVATION 12-6

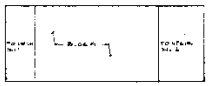

MEETING ROOM ELEVATION 13-6

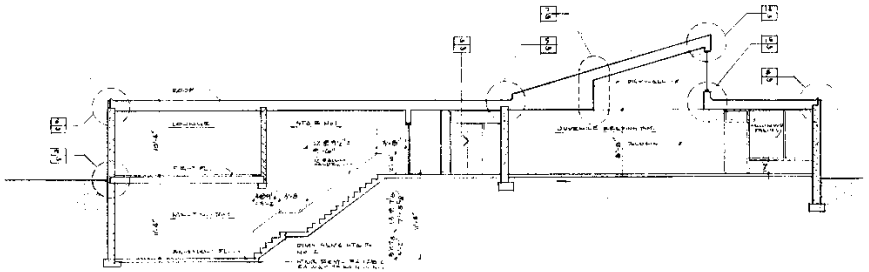

SECTION A-6

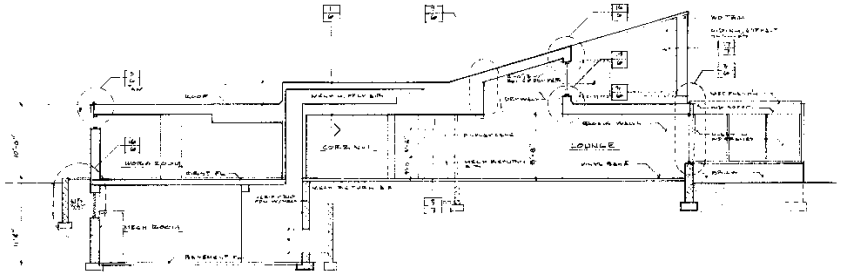

SECTION B-6

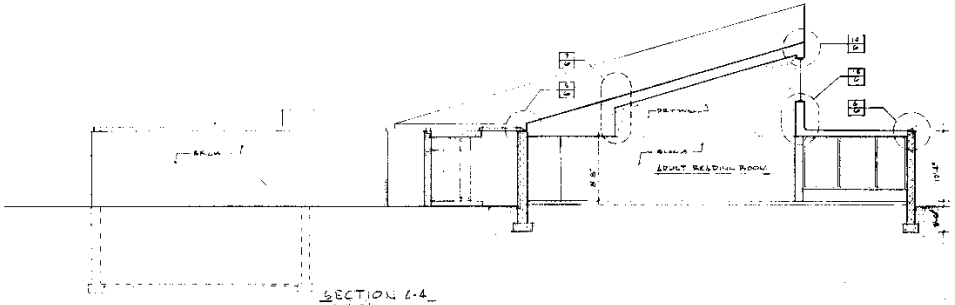

SECTION C-6

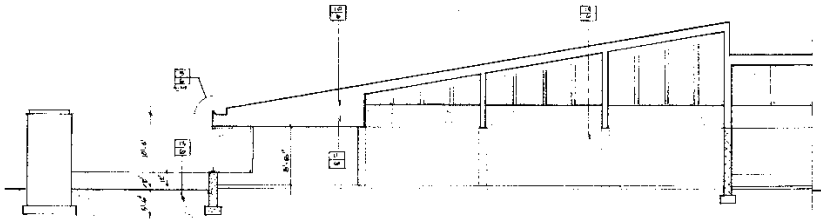

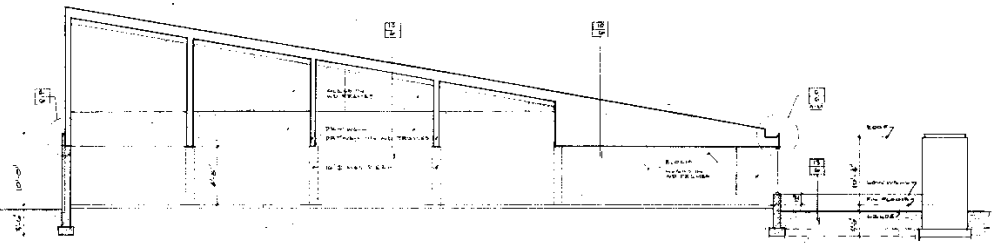

SECTION D-6

Gunnar Birkerts and Associates Architects

Tel 644-0686
1200 north Woodward Birmingham Michigan

NEW
SOUTH BRANCH
LIVONIA LIBRARY

CITY OF LIVONIA
WAYNE COUNTY
MICHIGAN

INTERIOR ELEVATIONS
SECTIONS

REVISIONS		
ITEM	DATE	BY

DRAWN
CHECKED
APPROVED
DATE SEPT 28, 1965
SCALE
PROJECT 6802

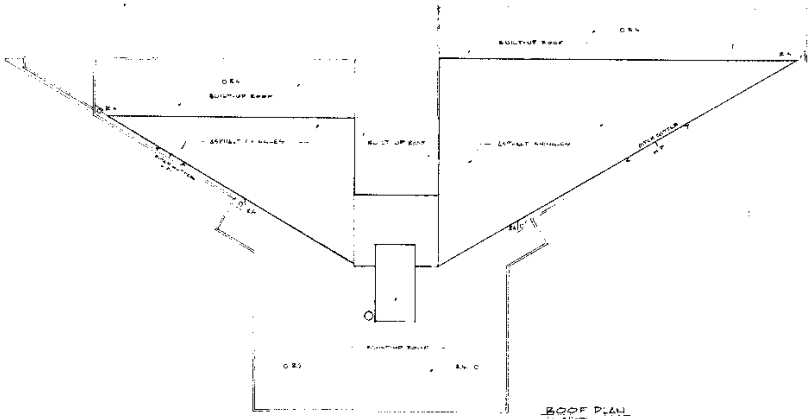

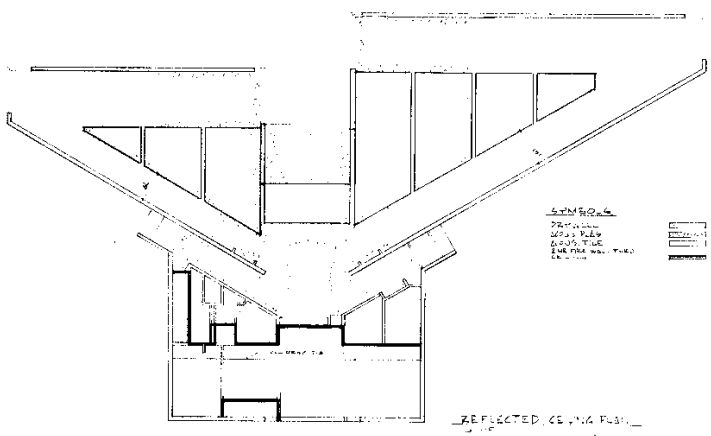

DOOR SCHEDULE

DOOR NO	ROOM NAME	DOOR SIZE	MATERIAL TYPE	MATERIAL DR.	MATERIAL FR.	MATERIAL THRESH.	DETAIL HEAD	DETAIL JAMB	DETAIL SILL	HARDW.	REMARKS
1	ADULT READING RM.	4'-0" x 7'-2"	C	WD	WD	MET	23/7	5-12/7	28/7		
2	JUVENILE READING RM	4'-0" x 7'-2"	C	WD	WD	MET	23/7	5-12/7	28/7		
3	VEST. BOOK NO 1	5'-0" x 7'-2"	A	HM	HM	MET	6/6	18/7	6/6		
4	VESTIBULE NO 1	5'-0" x 7'-2"	A	HM	HM	MET	6/6	18/7	6/6		
5	VESTIBULE NO 2	5'-0" x 7'-2"	A	HM	HM	MET	6/6	18/7	6/6		
6	VEST. BOOK NO 2	5'-0" x 7'-2"	A	HM	HM	MET	6/6	18/7	6/6		
7	STAFF NO 1	5'-0" x 7'-2"	D	WD	HM		6/7	5-8/7			B-LABEL
8	MEN'S TOILET	2'-8" x 7'-2"	C	WD	WD	MLW	9/7	12/7			1" UNDERCUT
9	JANITOR	2'-8" x 7'-2"	C	WD	HM		15/7	12/7			
10	WOMEN'S TOILET	2'-8" x 7'-2"	C	WD	WD	MLW	9/7	15/7			1" UNDERCUT
11	CIRCULATION NO 2	2'-8" x 7'-2"	B	WD	WD		9/7	7-9/7			1" UNDERCUT
12	WORK ALCOVE	2'-8" x 7'-2"	C	WD	HM		16/7	6/7			B-LABEL
13	SECRETARY	2'-8" x 7'-2"	B	WD	WD		9/7	15/7			1" UNDERCUT
14	STAFF TOILET	2'-8" x 7'-2"	C	WD	HM	MLW	15/7	12/7			1" UNDERCUT
15	CIRCULATION NO 1	2'-8" x 7'-2"	C	WD	HM		15/7	12/7			B-LABEL
16	SECRETARY	2'-8" x 7'-2"	C	WD	HM		15/7	12/7			B-LABEL
17	CIRCULATION NO 1	2'-8" x 7'-2"	C	WD	HM		15/7	12/7			
18	CIRCULATION NO 1	2'-8" x 7'-2"	C	WD	HM		15/7	12/7			B-LABEL
19	LOUNGE	2'-8" x 7'-2"	C	WD	WD		15/7	12/7			DOOR CONVEX
20	STAFF NO 2	5'-0" x 7'-2"	C	HM	HM	MET	20/7	5-19/7	21/7		
21	STAFF NO 1	5'-0" x 7'-2"	C	HM	HM	MET	20/7	5-19/7	21/7		
25	MECHANICAL ROOM	3'-0" x 7'-2"	C	HM	HM		15/7	12/7			B-LABEL
26	STORAGE ROOM	3'-0" x 7'-2"	C	WD	HM		15/7	12/7			

ROOM FINISH SCHEDULE

FINISH NO	ROOM NAME	FLOOR: CONCRETE	FLOOR: CONC. WEARING	FLOOR: VINYL TILE	FLOOR: RUBBER TILE	FLOOR: CARPET	FLOOR: TERRAZZO	BASE: WOOD	BASE: VINYL COVE	BASE: CERAMIC TILE	BASE: RUBBER	BASE: PLASTIC	WALLS: PLASTER	WALLS: PAINT ON BLOCK	WALLS: VINYL WALLPAPER	WALLS: PAINTED	CEILING: ACOUSTICAL TILE	CEILING: DRY WALL	CEILING: PLASTER	CEILING: PAINTED	REMARKS
		1	2	3	4	5	6	1	2	3	4	5	6	1	2	3	4	5	6		
100	JUVENILE READING RM	1			2				3			1				6	1		3		6	
101	LOUNGE	1			4				3			1				6	1		3		6	
102	ADULT READING RM	1			4				3			1				6	1		3		6	
103	VEST. BOOK NO 1				4	9		1					2						3		6	
104	CORRI. DOOR NO 1				4			1	2			1	2	3		6	1				6	BLOCK W/ PERMED PLASTER
105	CORRI. DOOR NO 2				4			1	2			1	2	3		6	1				6	BLOCK W/ PERMED PLASTER
106	VEST. BOOK NO 2				4	5		1					2						3		6	
107	STAFF NO 1									5		1				6			3		6	VINYL TILED W/ RUBBER
108	MEN'S TOILET						6				4	1				6			3		6	
109	JANITOR CLOS.				4					5		1				6			3		6	
110	WOMEN'S TOILET						6				4	1				5			3		6	
111	STAFF TOILET						6				4	1				5			3		6	
112	CIRCULATION NO 2				4					3		1				6		2				
113	WORK ALCOVE				4					3		1				6		2				
114	SECRETARY				4					3		1				6		2				
115	CIRCULATION NO 1				4					3		1				6		2				
116	LOUNGE STAFF				4					3		1				6		2				
117	WORK ROOM				4					3		1				6		2				
118	STORAGE											1				6			3		6	VINYL TILED W/ RUBBER
119	MECHANICAL ROOM				4					3		1				6			3		6	
120	MECHANICAL ROOM		2									1				6			3			
121	STORAGE		2									1				6			3			

DOOR TYPES (NO SCALE)

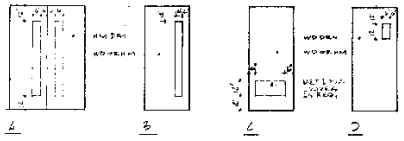

1 2 3 4

Gunnar Birkerts and Associates Architects

tel 3460804
1300 north Woodward Birmingham Michigan

NEW SOUTH BRANCH LIVONIA LIBRARY

CITY OF LIVONIA
WAYNE COUNTY
MICHIGAN

1/16" ROOF-CLG. PLAN
DOOR SCHEDULE
FINISH SCHEDULE
DOOR TYPES
DOOR & FRAME DETAILS

REVISIONS		
ITEM	DATE	BY

DRAWN	
CHECKED	
APPROVED	
DATE	SEPT 20, 1965
SCALE	
PROJECT	6801

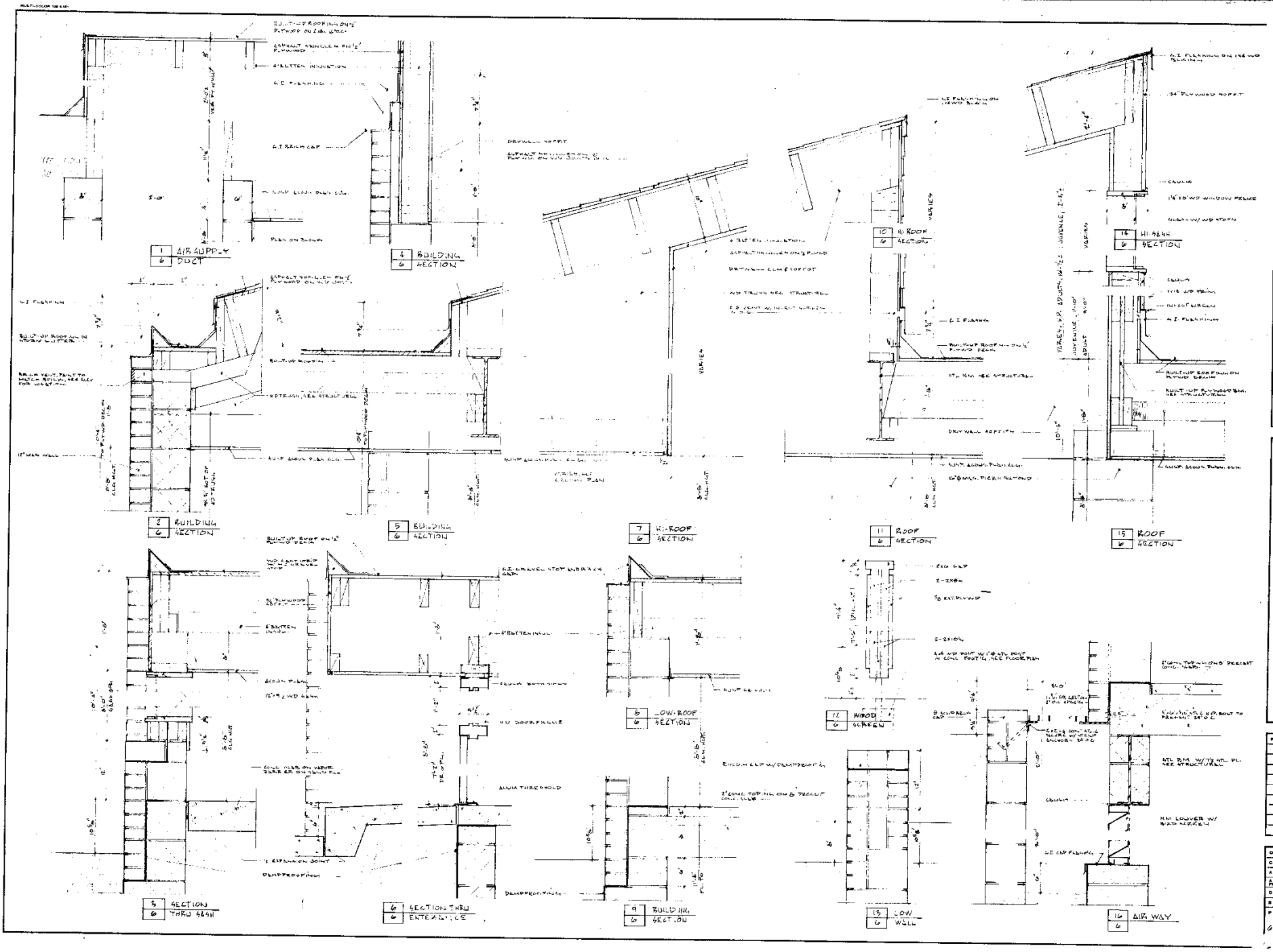

Gunnar Birkerts and Associates Architects

1900 north Woodward Bloomfield Michigan

NEW
SOUTH BRANCH
LIVONIA LIBRARY

CITY OF LIVONIA
WAYNE COUNTY
MICHIGAN

DETAILS

REVISIONS		
ITEM	DATE	BY

DRAWN
CHECKED
APPROVED
ARE OWNER
ARCHITECT
DATE SEPT. 18, 1965
SCALE
PROJECT 6502

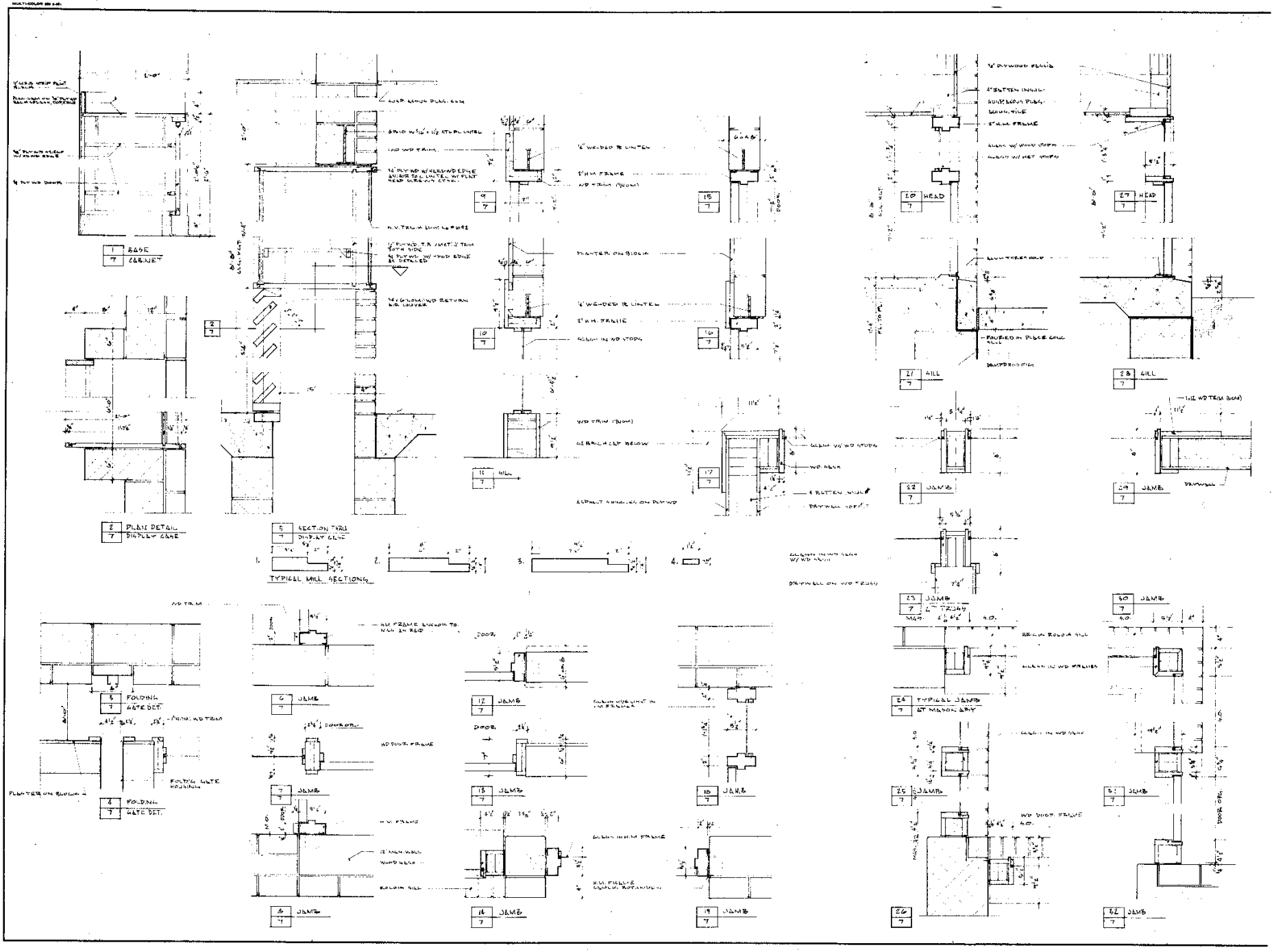

Gunnar Birkerts and Associates Architects

NEW SOUTH BRANCH LIVONIA LIBRARY

CITY OF LIVONIA
WAYNE COUNTY
MICHIGAN

DETAILS

REVISIONS		
ITEM	DATE	BY

DRAWN
CHECKED
APPROVED
AS BUILT FOR BOWER
DATE Sept. 18, 1965
SCALE
PROJECT 6502

7

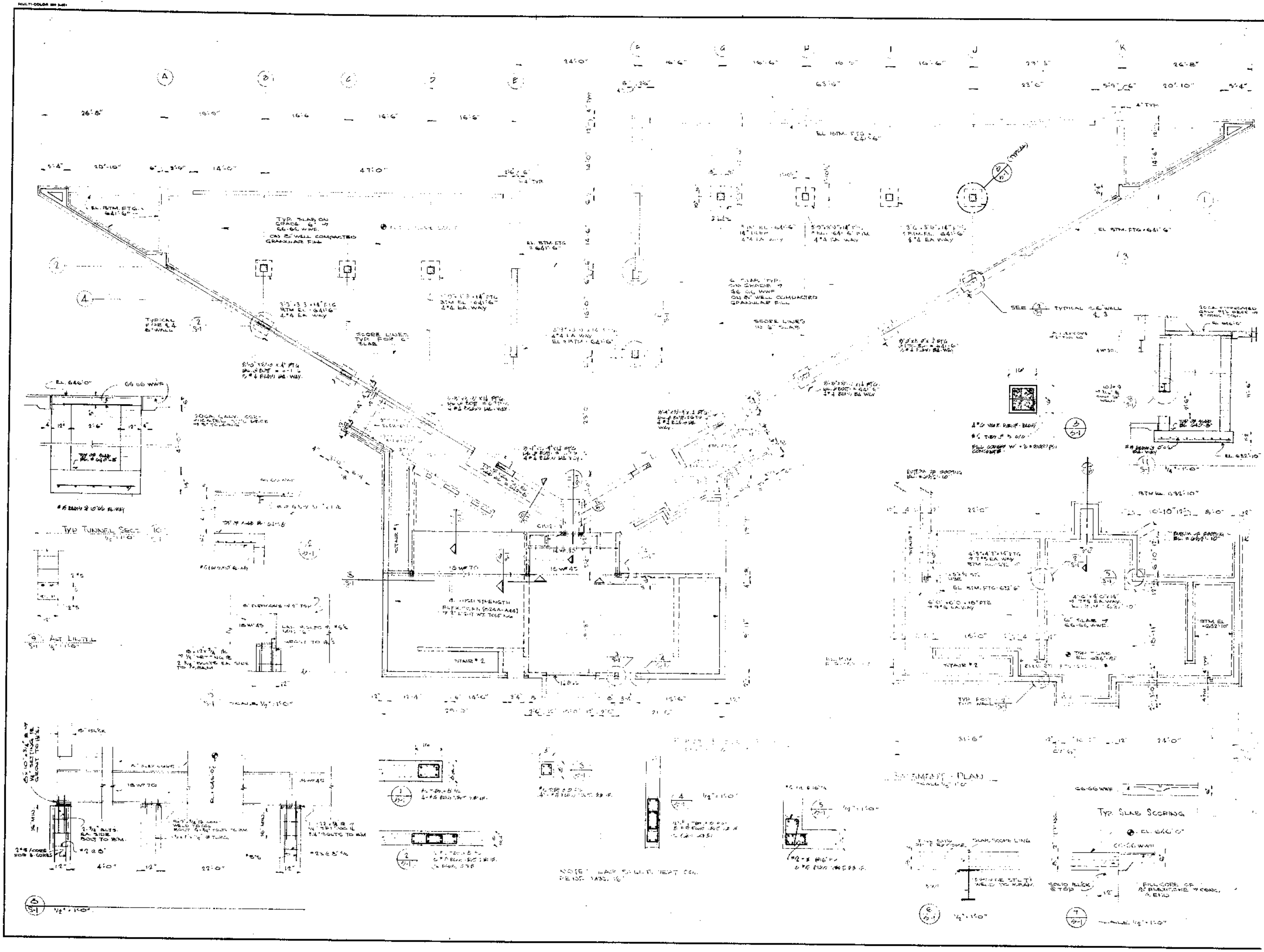

Gunnar Birkerts and Associates Architects

1900 North Woodward, Birmingham, Michigan

ROBERT M. DARVAS
AND ASSOCIATES
CONS. STRUCT. ENGS.
ANN ARBOR, MICH.

NEW
SOUTH BRANCH
LIVONIA LIBRARY

CITY OF LIVONIA
WAYNE COUNTY
MICHIGAN

FIRST FLOOR PLAN
BASEMENT PLAN
DETAILS

REVISIONS		
ITEM	DATE	BY

DRAWN	TRH / RBD
CHECKED	
APPROVED	
APPROVED FOR BOARD	
DATE	SEPT. 28, 1965
SCALE	
PROJECT	6502

S1

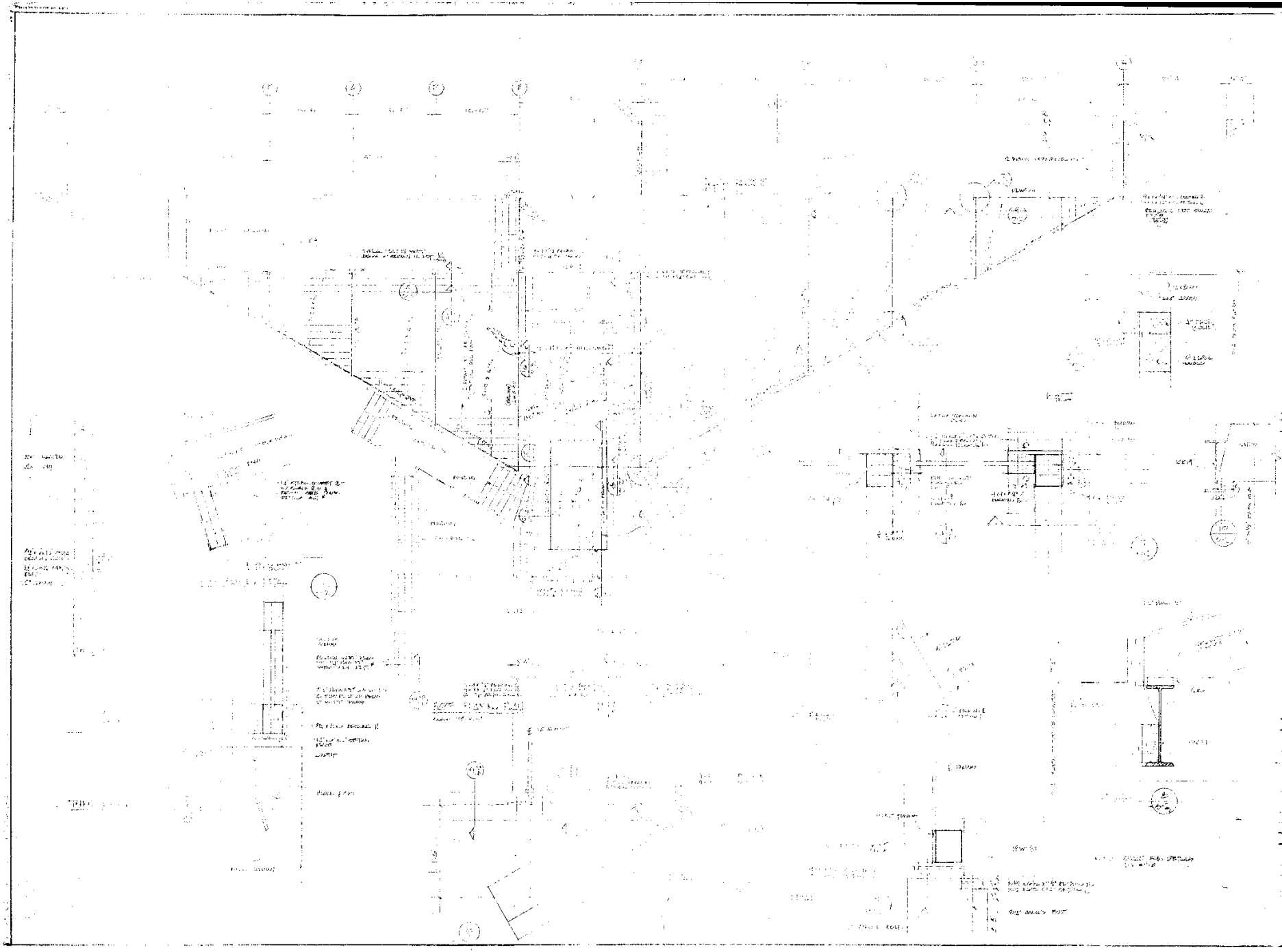

Gunnar Birkerts
and
Associates
Architects

ROBERT M. DAVIS
AND ASSOCIATES
CONSULTING ENGINEERS
ANN ARBOR, MICHIGAN

NEW
SOUTH ORANGE
LIVONIA LIBRARY

FOOT FRAMING PLAN
DETAILS

REVISIONS	
ITEM	DATE

DRAWN BY
CHECKED
APPROVED
APPROVED FOR FURNISH
DATE
REVISIONS
PROJECT
6802

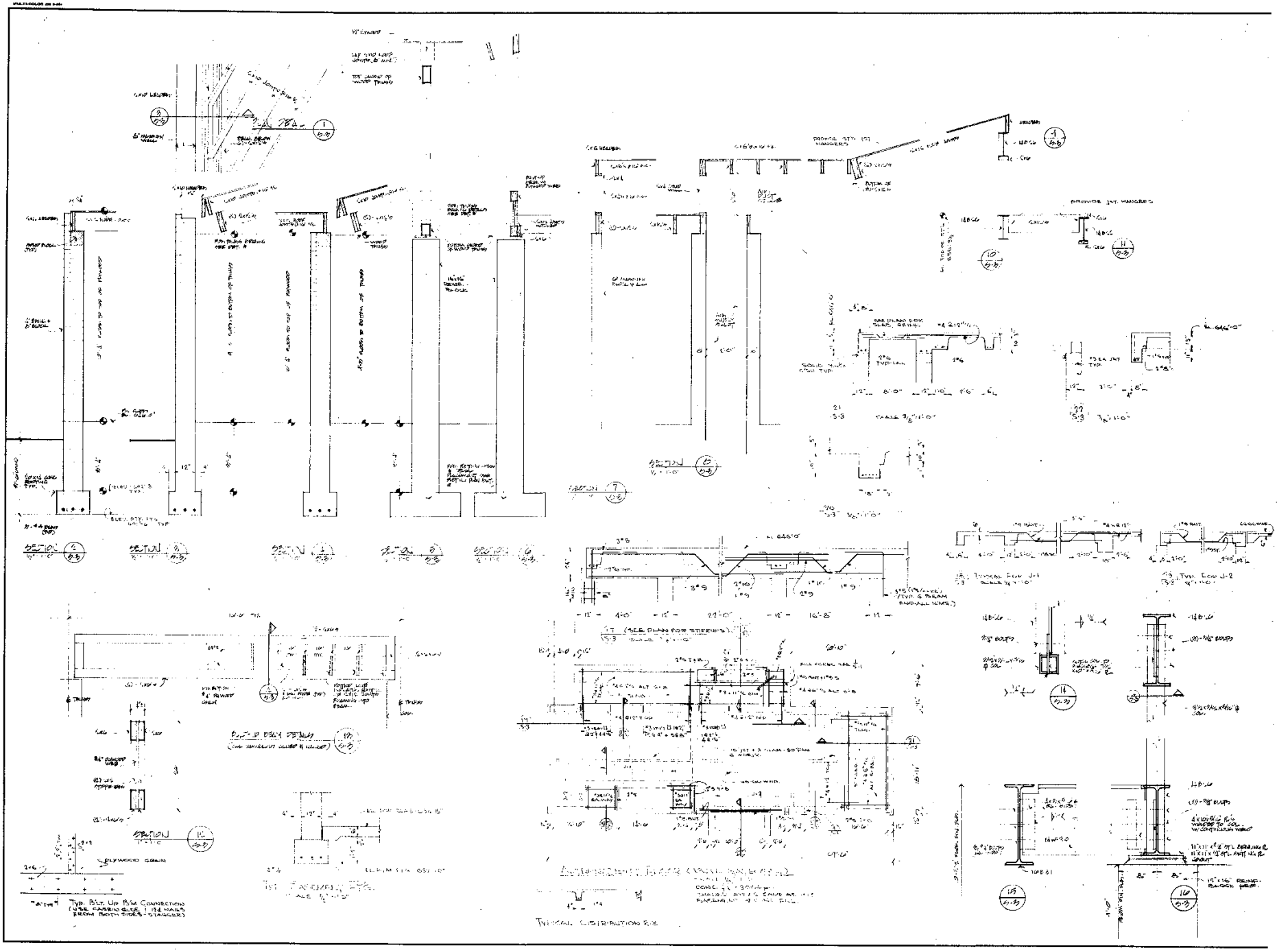

Gunnar Birkerts and Associates Architects

Tel 8440834
1366 North Woodward Bloomfield Michigan

ROBERT M. DARVAS AND ASSOCIATES
CONS. STRUCT. ENGS.
ANN ARBOR, MICH.

NEW
SOUTH BRANCH
LIVONIA LIBRARY

CITY OF LIVONIA
WAYNE COUNTY
MICHIGAN

SECTIONS & DETAILS

REVISIONS		
ITEM	DATE	BY

DRAWN	TMP PND
CHECKED	
APPROVED	
APPROVED FOR CONSTRUCT	
DATE	MAY 20, 1975
SCALE	VARIES
PROJECT	6502

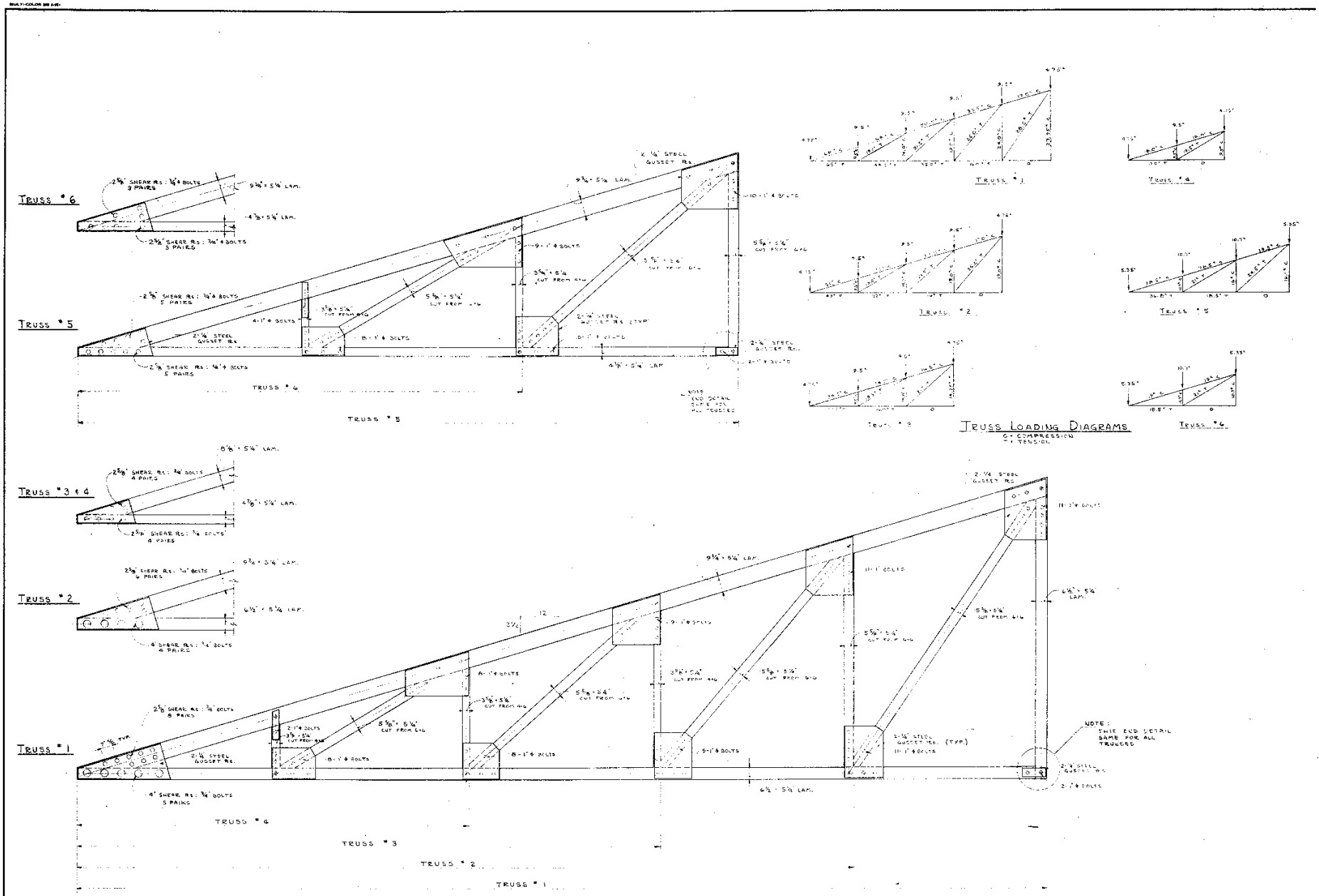

Gunnar Birkerts and Associates Architects

tel 8440604
1205 north Woodward Birmingham Michigan

ROBERT M. DARVAS AND ASSOCIATES
CONS. STRUCT. ENGS.
ANN ARBOR, MICH.

NEW
SOUTH BRANCH
LIVONIA LIBRARY

CITY OF LIVONIA
WAYNE COUNTY
MICHIGAN

TRUSS ELEVATIONS
DETAILS

REVISIONS		
ITEM	DATE	BY

DRAWN KJW
CHECKED
APPROVED
APPROVED FOR COMPUTA
DATE SEPT 18, 1968
SCALE 1/2"=1'-0"
PROJECT 6302
S 4

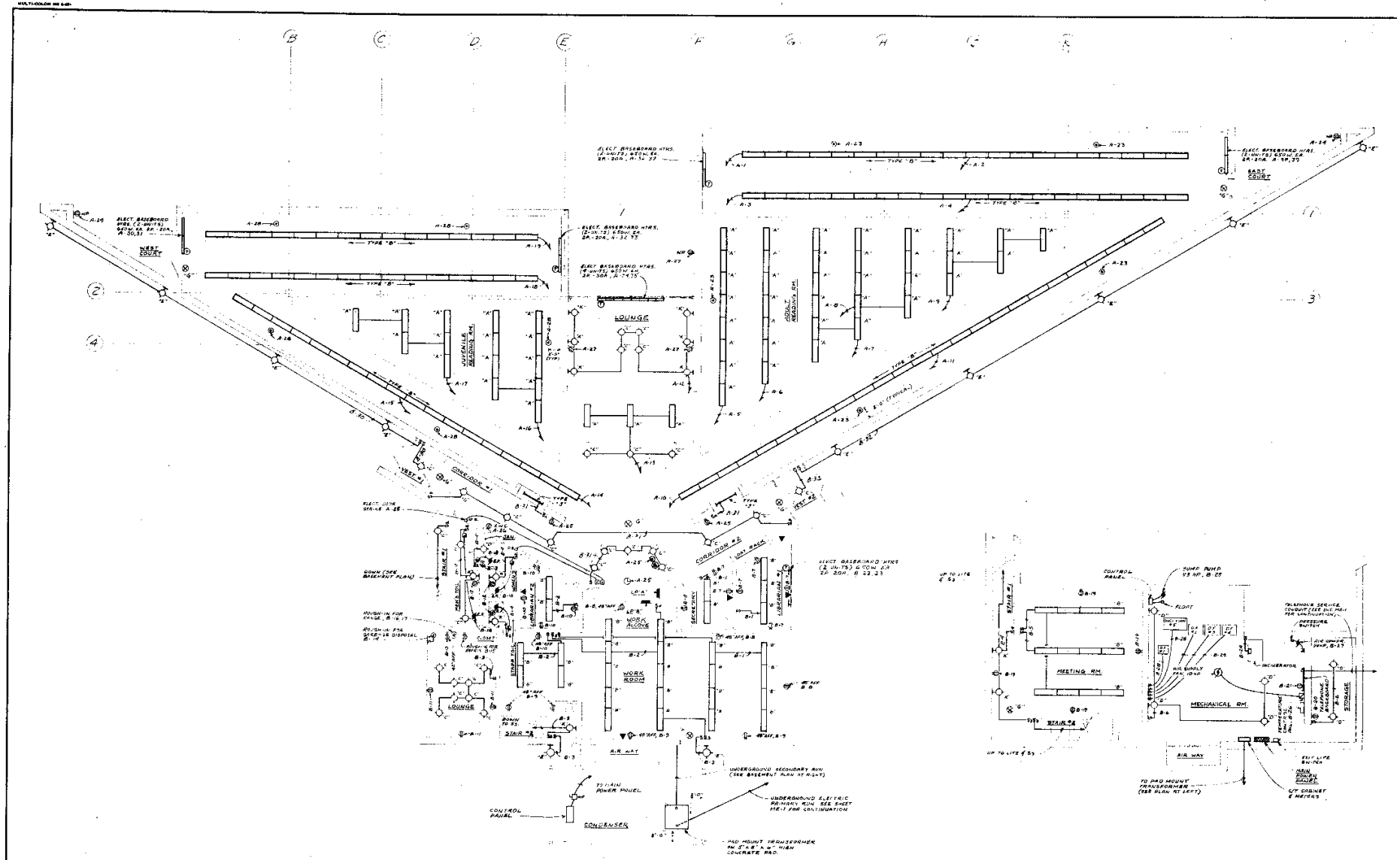

FIRST FLOOR - ELECTRICAL PLAN
SCALE: 1/8" = 1'-0"

BASEMENT - ELECTRICAL PLAN
SCALE: 1/8" = 1'-0"

Gunnar Birkerts and Associates Architects

1000 north Woodward Birmingham Michigan

tel 644 5000

SIEGEL - SWIECH ASSOCIATES
CONSULTING MECHANICAL AND ELECTRICAL ENGINEERS

NEW
SOUTH BRANCH
LIVONIA LIBRARY

CITY OF LIVONIA
WAYNE COUNTY
MICHIGAN

ELECTRICAL FLOOR PLAN

REVISIONS		
ITEM	DATE	BY

DRAWN	R.A.K.
CHECKED	E.B.S.
APPROVED	B.G.S.
APPROVED FOR CONSTR.	
DATE	OCT 4, 1965
SCALE	1/8" = 1'-0"
PROJECT	6205

E2

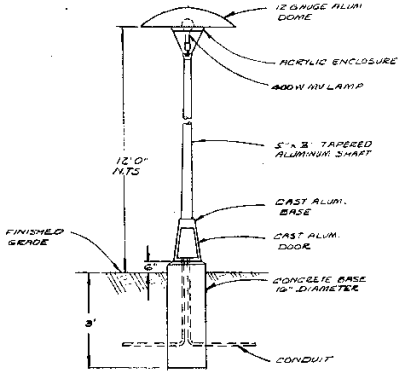

LIGHTING FIXTURE "F" MOUNTING DETAIL
NO SCALE

LIGHTING PANELBOARD SCHEDULE					
LP	CLASS	MAINS	MOUNTING	BRANCHES	CONNECTED LOAD
"A"	120/240V 1Ø 3W.	200 A.	FLUSH	30-1P. 20A. 5-2P. 30A. (ELECT. HTRS.)	36 KW
"B"		200 A.	FLUSH	28-1P. 20A. 1-2P. 20A (ELECT. MTR) 1-2P. 50A. RANGE	30 KW.

NOTE:
STUB (3) 3/4" C. FROM EACH FLUSH MOUNTED LIGHTING PANEL UP INTO ADJACENT CEILING SPACE.

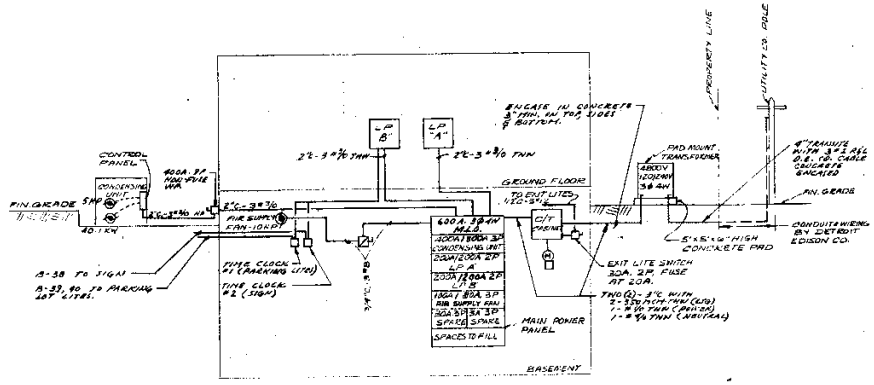

NOTE:
USE TIME DELAY DUAL ELEMENT TYPE FUSES IN ALL FUSEHOLDERS

MAIN ELECTRICAL RISER DIAGRAM
NO SCALE

ELECTRICAL SYMBOLS	
SYMBOL	DESCRIPTION
	FLUORESCENT LIGHTING FIXTURE
	HOME RUN TO LIGHTING PANEL
	CEILING MOUNTED INCANDESCENT LIGHTING FIXTURE
	WALL MOUNTED INCANDESCENT LIGHTING FIXTURE
	FLUORESCENT STRIP LIGHTING FIXTURE
	EXIT LIGHT
J	JUNCTION BOX
S	SINGLE POLE LIGHT SWITCH
$_2$	TWO POLE LIGHT SWITCH
$_3$	THREE WAY LIGHT SWITCH
$_4$	FOUR WAY LIGHT SWITCH
$_K$	KEY TYPE LIGHT SWITCH
	CLOCK OUTLET
	TELEPHONE WALL OUTLET
	110V DUPLEX PLUG RECEPTACLE
WP	110V WEATHERPROOF DUPLEX RECEPTACLE
	LIGHTING PANEL
	SINGLE PHASE MOTOR
	THREE PHASE MOTOR
	POWER PANEL
	SINGLE PHASE MANUAL MOTOR STARTER
	THREE PHASE MAGNETIC MOTOR STARTER
	SAFETY SWITCH
WP	WEATHERPROOF
AFF	ABOVE FINISHED FLOOR
T	THERMOSTAT
	ELECTRIC RANGE OUTLET
	110V PLUG RECEPTACLE FLOOR TYPE
	TELEPHONE OUTLET FLOOR TYPE
	PUSHBUTTON STATION

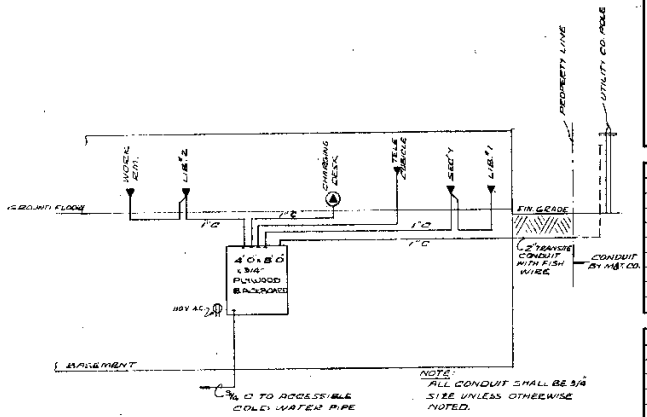

NOTE:
ALL CONDUIT SHALL BE 3/4 SIZE UNLESS OTHERWISE NOTED.

TELEPHONE SYSTEM RISER DIAGRAM
NO SCALE

Gunnar Birkerts and Associates Architects
1300 north Woodward Birmingham Michigan
tel 6440804

SIEGEL-SWIECH ASSOCIATES CONSULTING MECHANICAL AND ELECTRICAL ENGINEERS

NEW SOUTH BRANCH LIVONIA LIBRARY

CITY OF LIVONIA
WAYNE COUNTY
MICHIGAN

SYMBOLS, RISER, MISC.

REVISIONS		
ITEM	DATE	BY

DRAWN	BD
CHECKED	RES
APPROVED	EBS
APPROVED FOR CONSTR.	
DATE	OCT. 4, 1965
SCALE	AS NOTED
PROJECT	6602

E-7

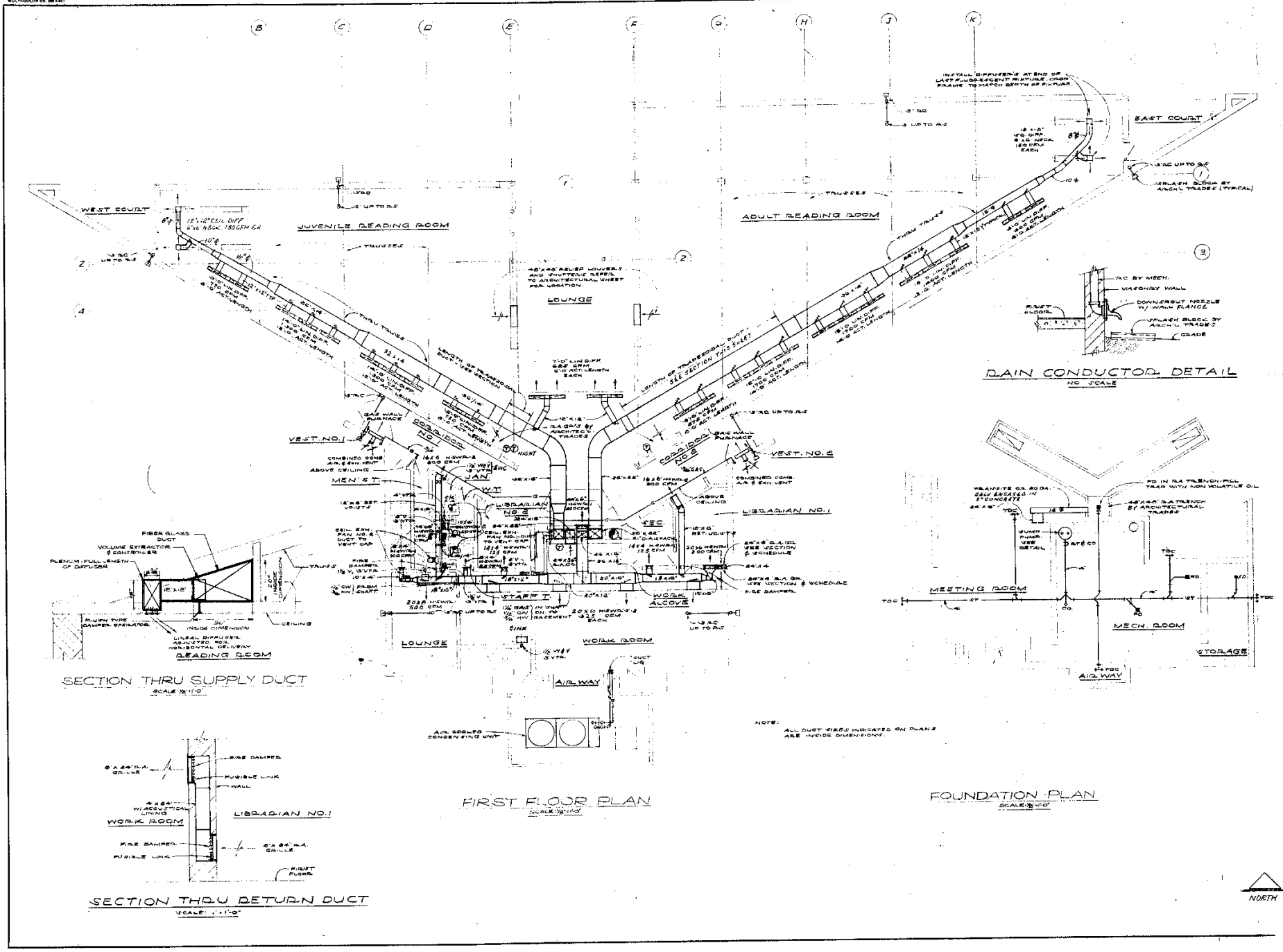

Gunnar Birkerts and Associates' Architects

NEW SOUTH BRANCH LIVONIA LIBRARY

CITY OF LIVONIA
WAYNE COUNTY
MICHIGAN

FOUNDATION AND FIRST FLOOR PLAN

REVISIONS		
ITEM	DATE	BY

DRAWN EK, JD
CHECKED EGS
APPROVED EGS
APPROVED FOR CONSTR.
DATE OCT 4, 1965
SCALE
PROJECT 6502

M-2

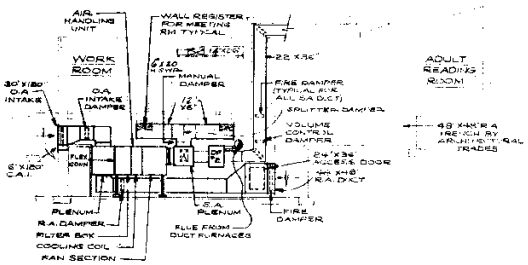

SECTION A-A
SCALE 1/8" = 1'-0"

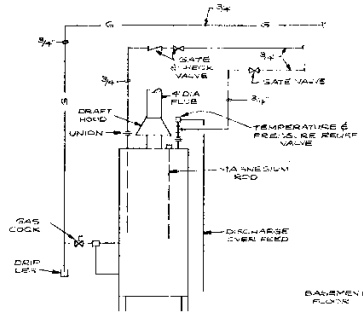

HOT WATER HEATER DETAIL

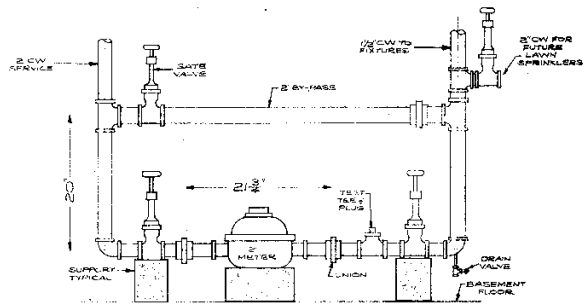

WATER METER DETAIL
NO SCALE

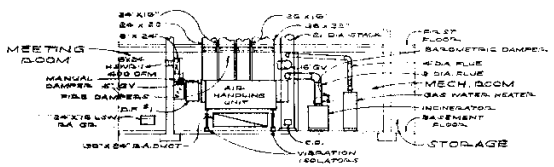

SECTION B-B
SCALE 1/8" = 1'-0"

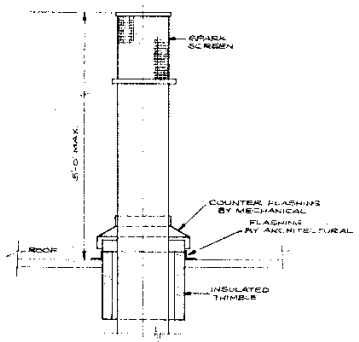

INCINERATOR, WATER HEATER, & DUCT FURNACE STACK DETAIL
NO SCALE

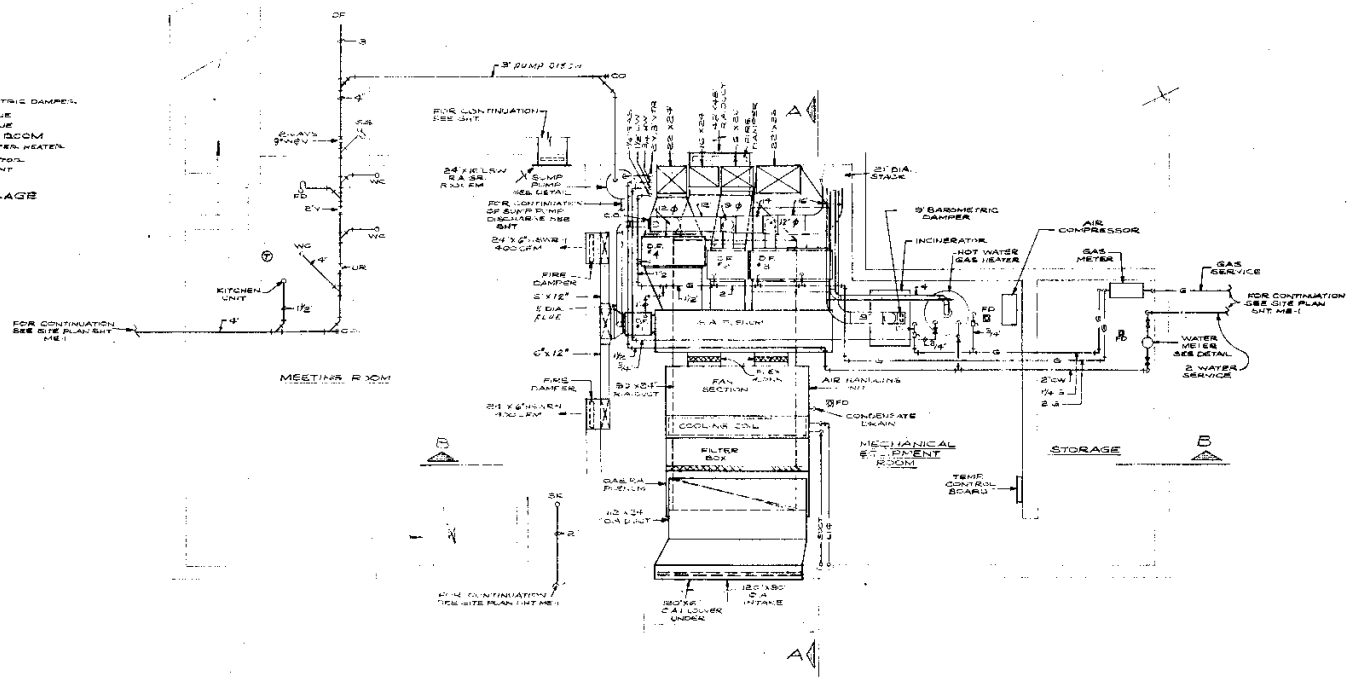

BASEMENT PLAN
1/4" SCALE

Gunnar Birkerts and Associates Architects

1200 North Woodward Birmingham Michigan

NEW
SOUTH BRANCH
LIVONIA LIBRARY

CITY OF LIVONIA
WAYNE COUNTY
MICHIGAN

BASEMENT PLAN
SECTIONS AND
DETAILS

REVISIONS		
ITEM	DATE	BY

DRAWN J.D.
CHECKED EGS
APPROVED EGS
ARCHITECT FOR COUNTY
DATE Oct. 4, 1966
SCALE
PROJECT 6502 M-3

GRILLES, REGISTERS & DIFFUSERS		
TYPE	MFG. MODEL	REMARKS
HSWR	TITUS L-275	SATIN ALUMINUM FINISH 0270560 BLADE DAMPER
HSWR-1	TITUS L-270	SATIN ALUMINUM FINISH W/AG-40 FIRE DAMPER
HSWR-8	TITUS L-275	SATIN ALUMINUM FINISH 0207 [illegible]
LINEAR DIFFUSER	TITUS ML 25/30 MODULINE 12	SATIN ALUMINUM FINISH 4 SLOT
CEILING DIFFUSER	TITUS TMDC-53 SQUARE DIFF. PATTERN 4A	BAKED WHITE ENAMEL FIN SH AG-[illegible] RADIAL COIL DROP FRAME TO MATCH SURFACE FINISH [illegible]
RETURN AIR	TITUS RL-250	SATIN ALUMINUM FINISH
RETURN AIR	TITUS RLL-250	SATIN ALUMINUM FINISH W/AG-40 FIRE DAMPER - IN LIBRARY AN NO. 1 & WORK ROOM.

CEILING EXHAUST FANS		
TYPE	MFG MODEL	REMARKS
CEIL. EXH. FAN #1	EMERSON ELECTRIC 2208	200 CFM 55 WATT 3 REQ'D
CEIL. EXH. FAN #2	EMERSON ELECTRIC 2210	225 CFM 90 WATT 2 REQ'D

GAS WALL FURNACE

TEMCO PREVENT GAS WALL FURNACE 30,000 BTU/HR INPUT, 21,000 BTU/HR OUTPUT, MODEL NO. 308-3

AIR HANDLING UNIT

TRANE MODEL No. 31 LOW PRESSURE DRAW THRU UNIT, 2-20 DW DI FC FANS 16,000 CFM @ 2.25" T.S.P.
90 MAX BHP 10 HP 220V/3 PH MOTOR 765 FAN RPM 1800 FPM C.V.
COOLING COIL - 22.2 DX 30.0 SQ FT 4 ROW MIN. 45° SUCTION TEMP
ENTERING - 81°DB, 67°WB
LEAVING - 58°DB 56.5°WB

AIR COOLED CONDENSING UNIT

TRANE MODEL 12A400-CAPACITY 40.4 TONS AT 95°
AMBIENT AIR TEMP. 44°F VAP TEMP, 40.1 KW INPUT
220V, 3φ, 60~ CONDENSER FAN MOTOR, - 5HP, 1750 RPM
220V, 3φ, 60~

DUCT FURNACES			CFM	E.S.
DF#1	REZNOR X-50	50,000 BTU/HR. INPUT 40,000 BTU/HR. OUTPUT	800	0.30"
DF#2	REZNOR X-200	200 000 BTU/HR. INPUT 165,000 BTU/HR. OUTPUT	3500	0.42
DF#3	REZNOR X-400	400 000 BTU/HR. INPUT 330,000 BTU/HR. OUTPUT	7600	0.25
DF#	REZNOR X-350	350,000 BTU/HR. INPUT 280,000 BTU/HR. OUTPUT	5000	0.20

WATER HEATER

LOCHINVAR BOILER MODEL 60A-1 60 GAL. STORAGE 65,000 BTU INPUT 54 GPM @ 32.0 GAL @ 100° RISE

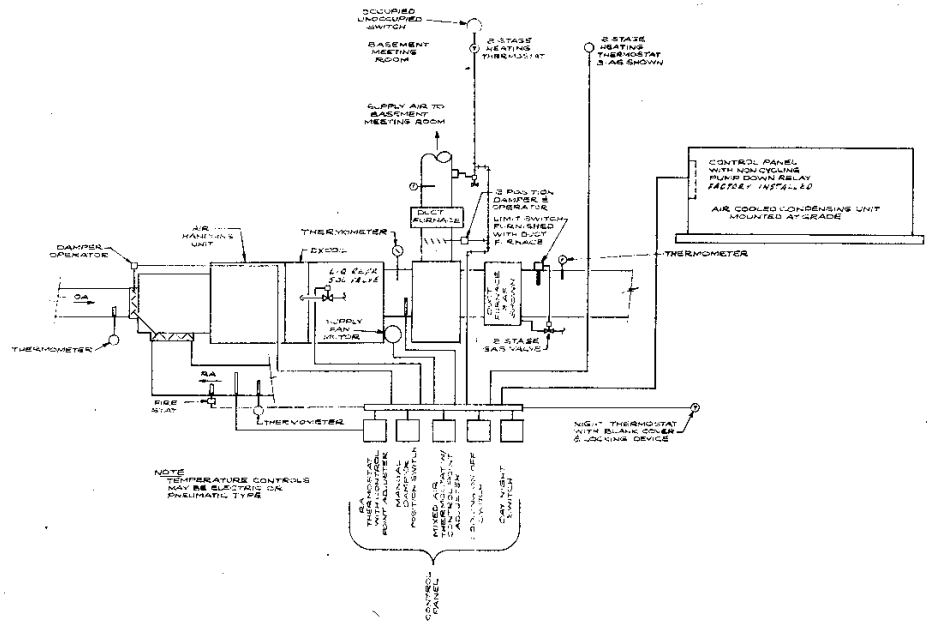

TEMPERATURE CONTROL DIAGRAM
NO SCALE

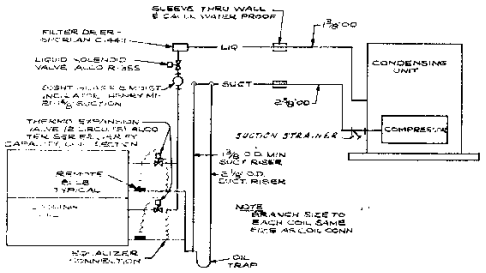

SCHEMATIC REFRIGERANT PIPING
NO SCALE

Gunnar Birkerts and Associates Architects

NEW SOUTH BRANCH LIVONIA LIBRARY

CITY OF LIVONIA
WAYNE COUNTY
MICHIGAN

TEMPERATURE CONTROLS AND SCHEDULES

REVISIONS		
ITEM	DATE	BY

DRAWN JD
CHECKED EGS
APPROVED EGS
APPROVED FOR CONSTR.
DATE OCT. 4, 1965
SCALE
PROJECT 6502 M-4

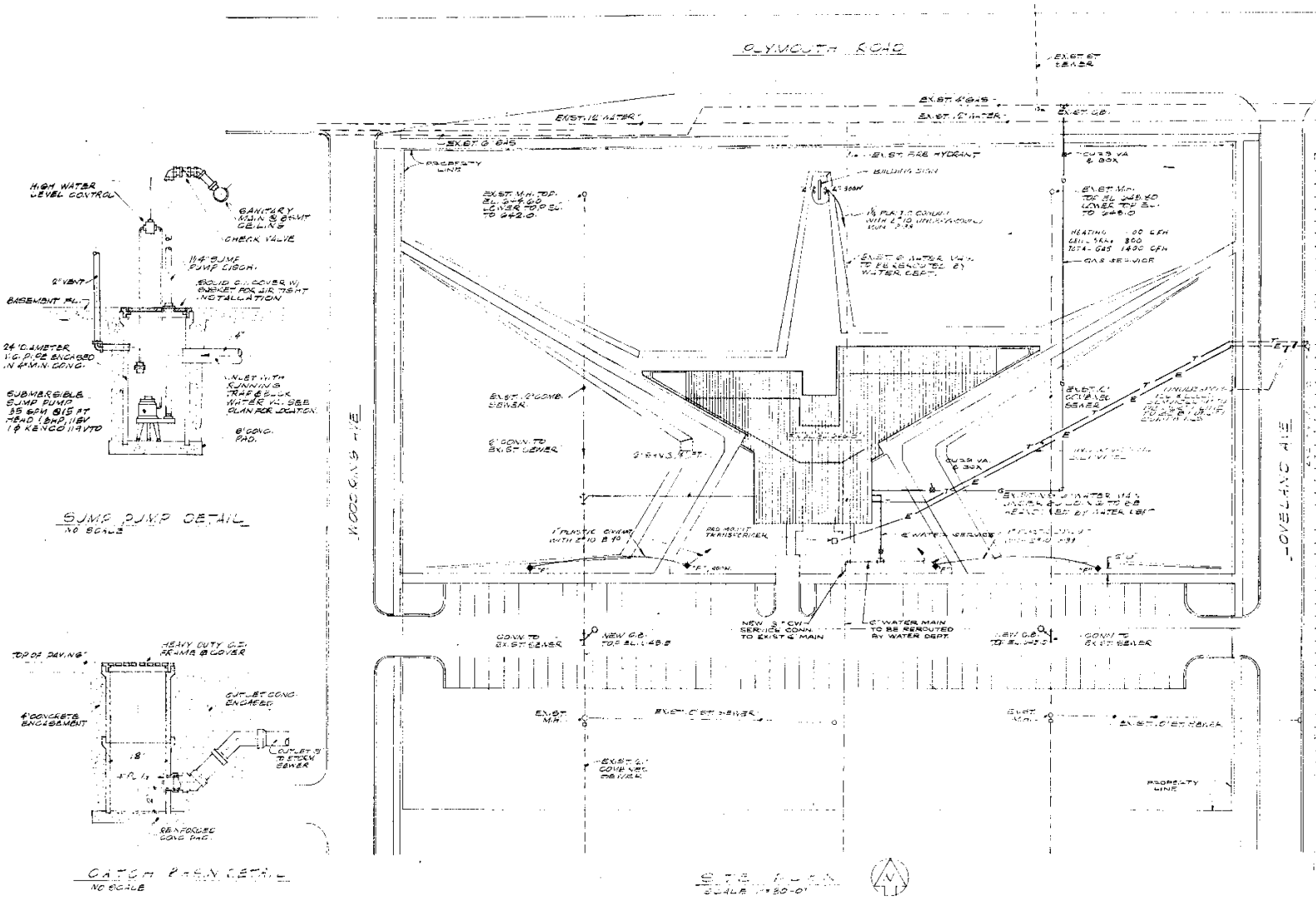

LEGEND

SYMBOL	DESCRIPTION
———	SANITARY SEWER
— — —	STORM SEWER
———	COLD WATER
———	HOT WATER
—G—	GAS
LIN DIFF.	LINEAL DIFFUSER
SQ DIFF.	SQUARE DIFFUSER
FD, AD	FLOOR OR AREA DRAIN
TDC	TILE DRAIN CONNECTOR
WC	WATER CLOSET
LAV	LAVATORY
UR	URINAL
SK	SINK
S.S	SERVICE SINK
LSWR	LOW SIDE WALL REGISTER
HSWR	HIGH SIDE WALL REGISTER
RA.GR	RETURN AIR GRILLE
C.A.	CUTCOCK AIR
R.A.	RETURN AIR
WBV	WASTE & VENT
H&CW	HOT & COLD WATER
VTR	VENT THRU ROOF
RS	ROOF SUMP
RC	RAD. CONVECTOR
DF	DUCT FURNACE
C.B.	CATCH BASIN
D.F.	DUCT FURNACE
—T—	UNDERGROUND TELEPHONE SERVICE
—E—	UNDERGROUND ELECTRIC SERVICE
E.W.C.	ELECTRIC WATER COOLER

Gunnar Birkerts and Associates Architects

1900 North Woodward Birmingham Michigan Tel 644-0604

DIEGEL-SWIECH ASSOCIATES
CONSULTING MECHANICAL AND ELECTRICAL ENGINEERS

NEW SOUTH BRANCH LIVONIA LIBRARY

CITY OF LIVONIA
WAYNE COUNTY
MICHIGAN

MECHANICAL, ELECTRICAL SITE PLAN

REVISIONS		
ITEM	DATE	BY

DRAWN E.O.
CHECKED A.N.
APPROVED E.C.S.
APPROVED FOR CONSTR.
DATE OCT 4, 1968
SCALE AS NOTED
PROJECT 6802

ME 1

April 5, 2023

Mr. Jacob Rushlow, PE
Assistant Director of Public Works
City of Livonia
12973 Farmington Road
Livonia, MI 48150

RE: Alfred Noble Library Opinion of Costs

Dear Mr. Rushlow:

In May 2021, OHM Advisors visited the closed Alfred Noble Library building and completed a walkthrough with City staff. Based on the walkthrough and additional materials provided by the City, we prepared a memo dated July 8, 2021, with an of Opinion of Cost and recommendations for repairs as well as a new building alternative and complete demolition. This letter is an update of the Opinion of Cost for the three options: 1) Complete Demolition, 2) Renovation of the building to provide a core and shell building with no specific interior layout, and 3) Construction of a new building of comparable size.

Below is a summary of these three approaches and associated costs:

Option	Description	Cost
1	Building/Site Demolition	$ 475,000
2	Building Renovation and Site Improvements	$ 5,510,000
3	New Building	$ 7,320,000

A further breakdown of the above costs, including general construction, contingency, professional services , and contractor fees are outlined below in the Opinion of Cost section.

OHM Advisors®
34000 PLYMOUTH ROAD
LIVONIA, MICHIGAN 48150
T 734.522.6711
F 734.522.6427
OHM-Advisors.com

Opinion of Cost

Of recent, the current market has been volatile and ever changing as it relates to construction costs. With the costs of materials, , labor, and unknown factors like availability and lead time, the following opinion of costs have taken into consideration higher than normal contingency values as well as included an escalation markup for both labor and materials for an estimated construction time from starting end of 2023 at the earliest. If additional years are considered, there should be escalation costs added to these numbers between 5-6% annually.

1. Demolition of existing building and site clearing

The opinion of cost for demolition of the existing building includes demolition of entire building, removal of foundations and infill of basement area, sidewalks and site garden areas to be removed, general infill grading and seeding of area. It assumes the parking lot is to remain.

No	Description	Cost
1	Building demolition and Infill	$ 300,000
2	Site	$ 50,000
3	Subtotal	$ 350,000
4	Contingency (10%)	$ 35,000
5	Escalation (4%)	$ 15,000
6	Testing (8%)	$ 25,000
7	General Conditions/OH&P (15%)	$ 50,000
10	Total	$ 475,000

2. Renovation of existing building and site improvements

The intent of the renovation of the existing building and site improvements is to fully renovate the building to modernize the building envelope and provide an interior core of services and open concept plan for future development.

The following are site work assumptions used for development of this cost:

- Removal and replacement of parking lot pavement and aggregate base, including storm improvements to manage runoff from the new lot to current standards.
- Perimeter drainage at building footings to assist in water management around building. The new drainage system will be connected to existing sewers on site.
- New landscaping.
- New sidewalks with modification to grading areas around the building to improve site drainage.

The following are building component assumptions used for development of this cost:

- Complete tear out of existing space, providing new restroom core for size of building,
- Replacement of building envelope systems such as windows, roofs, and flashings. Existing structure and building enclosure (masonry) would remain with repair work such as tuckpointing and painting.
- Replacement of utility equipment, including mechanical units, power panels, and boilers. MEP distribution systems would be limited to core improvements (restrooms).

The following are items not in the opinion of cost:

- Interior space improvements, including MEP distribution systems and finishes.
- Loose furnishings or equipment.
- Replacement of existing sidewalks other than described above for drainage purposes.

We have included a 30% contingency with the type of renovation work being performed and possible mitigation required as additional areas/materials are exposed. We have also included a 4% escalation cost recognizing the project would not start until 2024 and reflective of continued rise in costs we have been seeing. A testing allowance of 6% is included due to further assessment of material abatement and existing conditions of materials that should be re-tested as work is completed to confirm all work has been done correctly.

No	Description	Cost
1	Building Renovations	$ 2,835,000
2	Site work	$ 550,000
4	Subtotal	$ 3,385,000
5	Contingency (30%)	$ 1,000,000
6	Escalation/Material Contingency (4%)	$ 140,000
7	Testing (6%)	$ 205,000
8	General Conditions/OH&P (10%)	$ 340,000
9	Professional Fees (13%)	$ 440,000
10	Total	$ 5,510,000

3. New building of similar size and function

The new building cost includes cost for a new 13,500 SF building on a green site. Similar lot size with similar parking and site circulations, landscaping, and utilities would be available in the new design.

The following are site work assumptions used for development of this cost:

- Provide new parking lot with HMA pavement, including installation of underground storage system to manage runoff generated by the proposed improvements.
- New landscaping.
- New sidewalks access to building. Assumed new sidewalk would have approximately the same area as the existing walks.

The following are building component assumptions used for development of this cost:

- Similar building size and features including masonry construction, with storefront glass, standing seam metal roof.
- Primary utility equipment, including mechanical unit, power panels, and boilers. MEP distribution systems would be limited to core (restrooms).

The following are items not in the opinion of cost:

- Interior space layouts, including MEP distribution systems and finishes.
- Loose furnishings or equipment.
- Reconfiguration of existing water and sanitary sewer utilities on site. Reconfiguration may be needed depending on location and layout of the new building.

No	Description	Cost
1	Building	$ 4,100,000
2	Site work	$ 1,050,000
4	Subtotal	$ 5,150,000
5	Contingency (15%)	$ 775,000
6	Escalation/Material Contingency (4%)	$ 206,000
7	Testing (2%)	$ 105,000
8	General Conditions/OH&P (10%)	$ 515,000
9	Professional Fees (11%)	$ 569,000
10	Total	$ 7,320,000

If you have any questions or want to discuss any items in more detail, please do not hesitate to call to review further.

Sincerely,
OHM Advisors

Christopher Ozog, Project Architect

cc: Rhett Gronevelt, OHM Advisors
Attachment: Aerial Site Scope

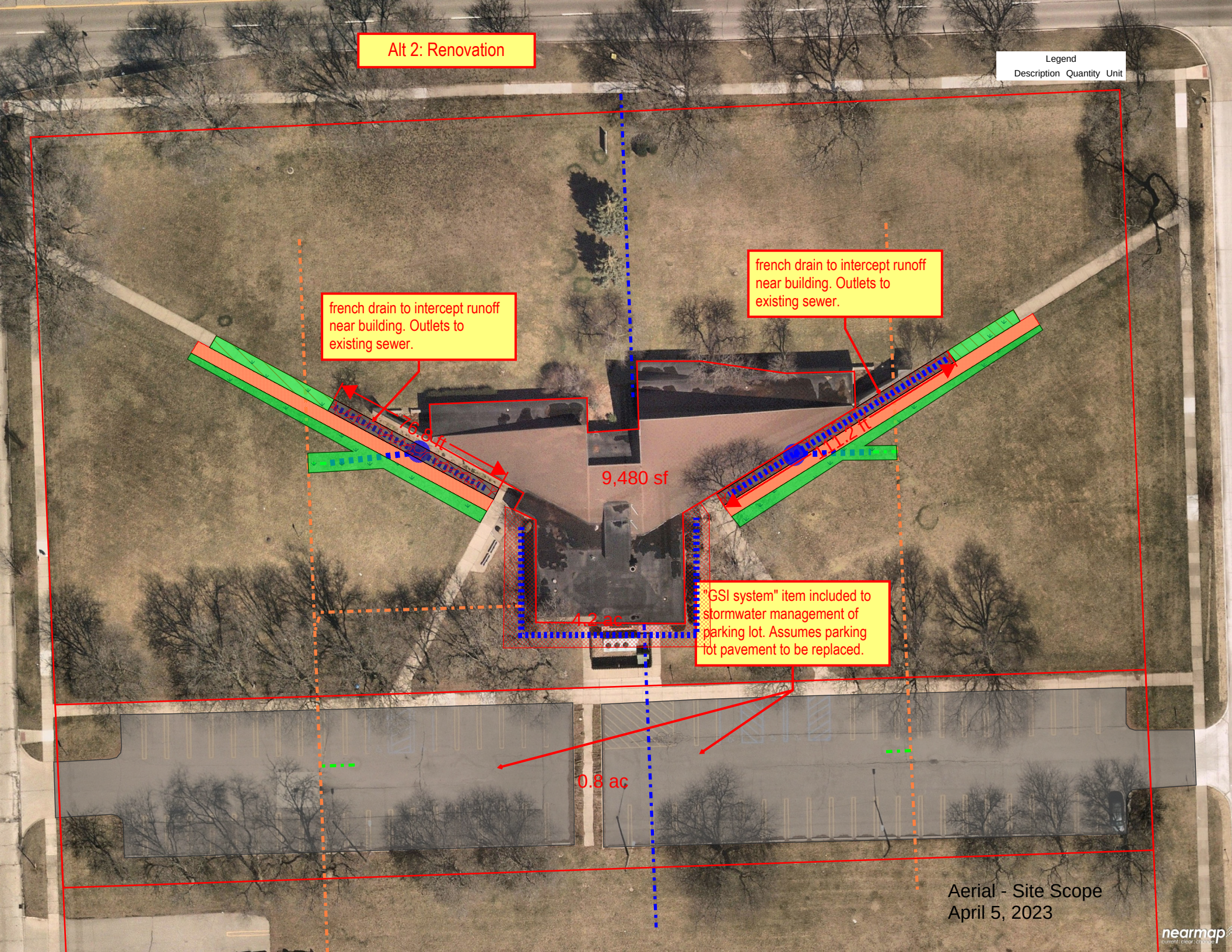
Alt 2: Renovation
Legend
Description Quantity Unit
french drain to intercept runoff near building. Outlets to existing sewer.
76.9 ft
french drain to intercept runoff near building. Outlets to existing sewer.
111.2 ft
9,480 sf
4.2 ac
"GSI system" item included to stormwater management of parking lot. Assumes parking lot pavement to be replaced.
0.8 ac
Aerial - Site Scope
April 5, 2023
nearmap

On a motion by Council President McCullough, supported by Councilmember Budzinski, and unanimously adopted, it was:

#54-25 RESOLVED, that upon the motion by Council President Brandon McCullough, seconded by Councilmember Carrie Budzinski, at the Regular Meeting held February 24, 2025, the Council does hereby direct the Administration to procure the services of a qualified and licensed civil engineer who will conduct a structural assessment of the Noble Building and issue a stamped report to council within 60 days of the date of this resolution for an amount not to exceed $20,000.00; FURTHER, the Council does hereby authorize an expenditure in an amount not to exceed $20,000 from funds budgeted in Account No. 401-000-971-000 for Council initiatives.

RESOLUTION REQEUSTED BY COUNCIL (Regular Meeting of February 24, 2025)

Motion:	**McCullough**
Second:	**Budzinski**
Ayes:	**Toy, Donovic, Ptashnik, Budzinski, Scheel, Morgan and McCullough**
Nays:	**None**
Absent:	**None**

LETTER TO THE LIVONIA CITY COUNCIL

b.

Finance
May 19, 2025

MEETING DATE	PRESENTED BY
R060225	

AGENDA ITEM

b. Communication from the Department of Finance dated May 19, 2025, re: forwarding the Departmental Purchases Report, for the months ending February 28, 2025, and March 31, 2025.

BACKGROUND DETAILS

Finance Ordinance 3.04.130(A) requires that a report be provided to the governing body regarding departmental purchases that are between $15,000 and $19,999. Attached hereto are the departmental purchases that meet this criterion for the months ending February 28, 2025, and March 31, 2025. Additional details on these purchases will be provided upon request.

PREFERRED COUNCIL RECOMMENDATION/RESOLUTION (Please complete this field. Attachments are not to be used in lieu of the recommendation)

We respectfully request that the City Council receive and file this report.

ATTACHMENTS

1. City Council - Receive and File Purchases - February 2025 and March 2025

Debra A. Lichtenberg

Debra Peck Lichtenberg, CPA, Finance Director

Date: May 22, 2025

Maureen Miller Brosnan

Maureen Miller Brosnan, Mayor

Date: May 23, 2025

City of Livonia

For Month of : February 2025

City Council - Receive and File Purchases

Pursuant to Ordinance Section 3.04.130, purchases between $15,000 and $19,999 need to be submitted to City Council as a receive and file item. Below are the purchases that meet this criteria.

Item #	Date	Department	Vendor	Item	Cost	Description
1	2/12/2025	Fire	Cummins Sales & Service	Fire Engine Repair	$15,698.28	Emergency Repair f/Engine 6
2						
3						
4						
5						
6						
7						
8						
9						
10						
11						
12						
13						
14						
15						
16						
17						
18						
19						
20						

City of Livonia

For Month of : March 2025

City Council - Receive and File Purchases

Pursuant to Ordinance Section 3.04.130, purchases between $15,000 and $19,999 need to be submitted to City Council as a receive and file item. Below are the purchases that meet this criteria.

Item #	Date	Department	Vendor	Item	Cost	Description
1	3/12/2025	Fire	Upper Level Graphics	Graphic Lettering f/Squads	$19,500.00	4-Ambulance Squads
2	3/17/2025	Police	Cellebrite INC	Cellebrite Upgrade	$15,450.00	PO#101 - Upgrade-Cellebrite Inseyets OnlinePro/Physical Analyzer
3	3/27/2025	Parks and Recreation	Michigan CAT	Stand-by generator	$19,000.00	PO#129 Stand by generator for June, July & August
4						
5						
6						
7						
8						
9						
10						
11						
12						
13						
14						
15						
16						
17						
18						
19						
20						

LETTER TO THE LIVONIA CITY COUNCIL

1.

Clerk
May 9, 2025

MEETING DATE	PRESENTED BY
S051925/R060225	

AGENDA ITEM

BLOCK PARTY: Jasmine Cone, re: to be held Thursday, June 5, 2025, from 12:00 p.m. to 2:00 p.m., between 14926 and 14987 Alexander Street.

BACKGROUND DETAILS

This block party will have water balloons and a picnic to celebrate the last day of school.

PREFERRED COUNCIL RECOMMENDATION/RESOLUTION (Please complete this field. Attachments are not to be used in lieu of the recommendation)

Approve as submitted.

ATTACHMENTS

1. S051925, Block Party, Jasmine Cone 14926 Alexander

APPROVED BY

Date: May 09, 2025

Doris DeMarco, Deputy Clerk

REQUEST FOR NOISE WAIVER BLOCK PARTY and/or BARRICADING OF CITY STREETS

Send to: Livonia City Council, c/o City Clerk, 33000 Civic Center Drive, Livonia, MI 48154-3097
or hand deliver to the City Clerk's Office **at least 8 weeks prior to the planned event**

PLEASE PRINT

Date of Application: 5/7/2025 Date to appear at a Council Meeting: _____

Name of Neighborhood Representative: Jasmine Cone

Address (please include zip code): 14926 Alexander Livonia MI 48154

Telephone Number with area code: Home: 734-772-2648 Office: _____

Email: Jasminercone@gmail.com

Please circle what is being requested – **"BLOCK PARTY"** and/or **"STREET BARRICADING"**

June 5, 2025	None	12p-2p
Date of Block Party and/or Barricading	Rain Date	Start/end time of Block Party and/or Barricading **End time is no later than 10:00 p.m.**

Location of Block Party and/or Barricading: (Be specific. Indicate which streets and between which boundaries).

14926 Alexander Street at Jamison up to 14987 Alexander ~~or 5mile~~

Type of Event: Briefly (Describe activities planned. Music, barbecue, games, etc.)

Water Baloon Party and Picnic for the kid's last day of school

How many barricades are you requesting (max. 10)? 2

Approximate Number Attending: 40-50

Date of Council Approval/Denial: _____

Council Resolution Number: _____

City Council Office Document
Revised August 2021
A:Block Party Form

LETTER TO THE LIVONIA CITY COUNCIL

2.

Clerk
May 5, 2025

MEETING DATE	PRESENTED BY
S051925	

AGENDA ITEM

BLOCK PARTY: Lisa Misenheimer, re: to be held Saturday, August 23, 2025, from 1:00 p.m. to 10:00 p.m., on Rayburn Street, between Williams Street and Levan Road, with a rain date of Saturday, September 13, 2025.

BACKGROUND DETAILS

They will host a block party with BBQ, games, and corn hole. They are expecting approximately 50 people.

PREFERRED COUNCIL RECOMMENDATION/RESOLUTION (Please complete this field. Attachments are not to be used in lieu of the recommendation)

Approve as submitted.

ATTACHMENTS

1. S051925, Block Party, Misenheimer, Rayburn St

APPROVED BY

Date: May 05, 2025

_____
Doris DeMarco, Deputy Clerk

REQUEST FOR NOISE WAIVER BLOCK PARTY and/or
BARRICADING OF CITY STREETS

Send to: Livonia City Council, c/o City Clerk, 33000 Civic Center Drive, Livonia, MI 48154-3097
or hand deliver to the City Clerk's Office **at least 8 weeks prior to the planned event**

PLEASE PRINT

Date of Application: 5/2/2025 Date to appear at a Council Meeting: _____

Name of Neighborhood Representative: Lisa Misenheimer

Address (please include zip code): 36700 Rayburn

Telephone Number with area code: Home: 734-634-6693 Office: _____

Email: lisa.misenheimer5@gmail.com

Please circle what is being requested – **"BLOCK PARTY"** and/or **"STREET BARRICADING"**

8/23/2025	9/13/2025	1:00 - 10:00
Date of Block Party and/or Barricading	Rain Date	Start/end time of Block Party and/or Barricading **End time is no later than 10:00 p.m.**

Location of Block Party and/or Barricading: (Be specific. Indicate which streets and between which boundaries).
Block Rayburn at Levan and Williams. We request 4-6 barricades total, 2-3 on each end.

Type of Event: Briefly (Describe activities planned. Music, barbecue, games, etc.) BBQ, kid games, corn hole

How many barricades are you requesting (max. 10)? 4-6

Approximate Number Attending: 50

Date of Council Approval/Denial: _____

Council Resolution Number: _____

RECEIVED
2025 MAY -2 AM 11:10

City Council Office Document
Revised August 2021
A:Block Party Form

LETTER TO THE LIVONIA CITY COUNCIL

3.

Mayor's Office
May 6, 2025

MEETING DATE	PRESENTED BY
S051925/R060225	Mark Taormina, Planning and Economic Development Director

AGENDA ITEM

REAPPOINTMENT OF RHETT GRONEVELT TO THE PLYMOUTH ROAD DEVELOPMENT AUTHORITY: Office of the Mayor, re: for a three-year term, which will expire on May 16, 2028.

BACKGROUND DETAILS

Honorable Members of the City Council, City of Livonia
RE: Reappointment of Rhett Gronevelt to the Plymouth Road Development Authority

Dear Council Members:

I am herewith submitting to you, for your consideration and approval, the reappointment of Mr. Rhett Gronevelt, 34000 Plymouth Road, Livonia, Michigan 48150, as a member of the Plymouth Road Development Authority for a term that will expire on May 16, 2028.

Your approval on this reappointment is respectfully requested.

Thank you,
Maureen Miller Brosnan, Mayor

PREFERRED COUNCIL RECOMMENDATION/RESOLUTION (Please complete this field. Attachments are not to be used in lieu of the recommendation)

Reappoint Rhett Gronevelt to the Plymouth Road Development Authority for a three-year term.

ATTACHMENTS

1. S051925 LTC Rhett Gronevelt PRDA

APPROVED BY

Maureen Miller Brosnan

Date: May 07, 2025

Maureen Miller Brosnan, Mayor

LETTER TO THE LIVONIA CITY COUNCIL

4.

Mayor's Office
May 6, 2025

MEETING DATE	PRESENTED BY
S051925/R060225	Mark Taormina, Planning and Economic Development Director

AGENDA ITEM

REAPPOINTMENT OF GREGORY COPPOLA TO THE LIVONIA ECONOMIC DEVELOPMENT CORP: Office of the Mayor, re: for a six-year term, which will expire on June 7, 2031.

BACKGROUND DETAILS

Honorable Members of the City Council, City of Livonia
RE: Reappointment of Gregory Coppola to the Livonia Economic Development Corp.

Dear Council Members:

I am herewith submitting to you, for your consideration and approval, the reappointment of Mr. Gregory Coppola, 20014 Shadyside, Livonia, Michigan 48152, as a member of the Economic Development Corp. for a term that will expire on June 7, 2031.

Your approval on this reappointment is respectfully requested.

Thank you,
Maureen Miller Brosnan, Mayor

PREFERRED COUNCIL RECOMMENDATION/RESOLUTION (Please complete this field. Attachments are not to be used in lieu of the recommendation)

Reappoint Gregory Coppola to the Livonia Economic Development Corp. for a six-year term.

ATTACHMENTS

1. S051925 LTC Greg Coppola LEDC

APPROVED BY

Maureen Miller Brosnan

Date: May 07, 2025

Maureen Miller Brosnan, Mayor

LETTER TO THE LIVONIA CITY COUNCIL

5.

Mayor's Office
May 6, 2025

MEETING DATE	PRESENTED BY
S051925/R060225	Mark Taormina, Planning and Economic Development Director

AGENDA ITEM

REAPPOINTMENT OF DAVID BONGERO TO THE LIVONIA PLANNING COMMISSION: Office of the Mayor, re: for a three-year term, which will expire on June 9, 2028.

BACKGROUND DETAILS

Honorable Members of the City Council, City of Livonia
RE: Reappointment of David Bongero to the Livonia Planning Commission

Dear Council Members:

I am herewith submitting to you, for your consideration and approval, the reappointment of Mr. David Bongero, 34623 Sarah Beth Lane, Livonia, Michigan 48152, as a member of the Planning Commission for a term that will expire on June 9, 2028.

Your approval on this reappointment is respectfully requested.

Thank you,
Maureen Miller Brosnan, Mayor

PREFERRED COUNCIL RECOMMENDATION/RESOLUTION (Please complete this field. Attachments are not to be used in lieu of the recommendation)

Reappoint David Bongero to the Livonia Planning Commission for a three-year term.

ATTACHMENTS

1. S051925 LTC David Bongero PC

APPROVED BY

Maureen Miller Brosnan

Date: May 07, 2025

Maureen Miller Brosnan, Mayor

LETTER TO THE LIVONIA CITY COUNCIL

6.

Mayor's Office
May 6, 2025

MEETING DATE	PRESENTED BY
S051925/R060225	Mark Taormina, Planning and Economic Development Director

AGENDA ITEM

REAPPOINTMENT OF JOHN MURPHY TO THE LIVONIA LOCAL OFFICERS COMPENSATION COMMISSION: Office of the Mayor, re: for a seven-year term, which will expire on April 2, 2032.

BACKGROUND DETAILS

Honorable Members of the City Council, City of Livonia
RE: Reappointment of John Murphy to the Local Officers Compensation Commission

Dear Council Members:

I am herewith submitting to you, for your consideration and approval, the reappointment of Mr. John Murphy, 32320 Cambridge, Livonia, Michigan 48154, as a member of the Local Officers Compensation Commission for a term that will expire on April 2, 2032.

Your approval on this reappointment is respectfully requested.

Thank you,
Maureen Miller Brosnan, Mayor

PREFERRED COUNCIL RECOMMENDATION/RESOLUTION (Please complete this field. Attachments are not to be used in lieu of the recommendation)

Reappoint John Murphy to the Livonia Local Officers Compensation Commission for a seven-year term.

ATTACHMENTS

1. S051925 LTC John Murphy LOCC

APPROVED BY

Maureen Miller Brosnan

Date: May 07, 2025

Maureen Miller Brosnan, Mayor

LETTER TO THE LIVONIA CITY COUNCIL

7.

Planning
April 10, 2025

MEETING DATE	PRESENTED BY
May 7, 2025	Mark Taormina, Planning and Economic Development Director

AGENDA ITEM

WAIVER PETITION: Planning Commission, re: Petition 2025-02-02-07, submitted by Midwest Freight Storage, requesting waiver use approval to operate an outdoor truck and trailer storage facility at 32225 Schoolcraft Road, located on the south side of Schoolcraft Road between Hubbard and Merriman Roads in the Northeast ¼ of Section 27.

BACKGROUND DETAILS

April 10, 2025

Honorable Members of the City Council
City of Livonia, Michigan

Re: Petition 2025-02-02-07 – Midwest Freight Storage

Dear Council Members:

At the 1,228th Meeting held by the Livonia City Planning Commission on April 8, 2025, the following resolution was adopted:

PREFERRED COUNCIL RECOMMENDATION/RESOLUTION (Please complete this field. Attachments are not to be used in lieu of the recommendation)

#04-12-2025 RESOLVED, That pursuant to a Public Hearing having been held by the City Planning Commission on April 8, 2025, on Petition 2025-02-02-07 submitted by Midwest Freight Storage requesting waiver use approval pursuant to Section 3.17 of the Livonia Zoning Ordinance to operate an outdoor truck and trailer storage facility at 32225 Schoolcraft Road, located on the south side of Schoolcraft Road between Hubbard and Merriman Roads in the Northeast ¼ of Section 27., be approved subject to the following conditions:

1. That the plan, dated February 17, 2025, prepared by Appee/Donnan, Inc., is hereby approved and shall be adhered to;

2. That the maximum number of semi-trucks and semi-trailers parked on the site shall not exceed twenty five (25);

3. That all semi-truck and semi-trailer storage shall be restricted to the confined area of the

property as shown on the approved plan;

4. Storage within the storage area shall be limited to semi-trucks and semi-trailers, as shown on the approved plan. Any other special trade contractor or business wishing to occupy or lease space on the property for the outside storage of equipment, vehicles or materials that differ from what is shown on the plan shall first obtain approval of the Planning Commission before obtaining a zoning compliance permit and certificate of occupancy from the City of Livonia Inspection Department and Fire Marshal;

5. That there shall be no outdoor storage of disabled or inoperative equipment and vehicles, scrap material, debris or other similar items;

6. There shall be no storage of flammable, explosive, radioactive, hazardous, toxic, or volatile substances upon the premises;

7. That no minor repairs or maintenance work on vehicles or trailers shall be conducted on this site;

8. That the petitioner shall submit a Letter of Understanding signed by the petitioner and the owner of the underlying real estate indicating that this waiver use will be voluntarily abandoned in the case the petitioner moves from the premises;

9. That the block wall and fencing be repaired to the satisfaction of the Inspection and Planning Departments;

10. That the specific plan referenced in this approving resolution shall be submitted to the Inspection Department at the time permits are applied for; and

11. Pursuant to Section 13.13 of the Livonia Zoning Ordinance, this approval is valid for a period of one year only from the date of approval by City Council, and unless a building permit is obtained, this approval shall be null and void at the expiration of said period.

FURTHER RESOLVED, That notice of the above hearing was given in accordance with the provisions of Section 13.13 of Livonia Zoning Ordinance, as amended.

ATTACHMENTS

1. S050725 LTC 2025-02-02-07 Midwest Freight
2. 2025-02-02-07_Midwest Freight_E-COUNCIL Pkt

APPROVED BY

Date: April 11, 2025

Mark Taormina, Planning and Economic Development Director

Date: April 11, 2025

Maureen Miller Brosnan, Mayor

Petition 2025-02-02-07 submitted by Midwest Freight Storage requesting waiver use approval pursuant to Section 3.17 of the Livonia Zoning Ordinance to operate an outdoor truck and trailer storage facility at 32225 Schoolcraft Road, located on the south side of Schoolcraft Road between Hubbard and Merriman Roads in the Northeast ¼ of Section 27.

UNAPPROVED MINUTES

MINUTES OF THE 1,228th PUBLIC HEARINGS AND REGULAR MEETING HELD BY THE CITY PLANNING COMMISSION OF THE CITY OF LIVONIA

On Tuesday, April 8, 2025, the City Planning Commission of the City of Livonia held its 1,228th Public Hearing and Regular Meetings in the Livonia City Hall, 33000 Civic Center Drive, Livonia, Michigan.

Mr. Ian Wilshaw, Chairman, called the meeting to order at 7 p.m.

Members present:	Wafa Dinaro	Sam Caramagno	Glen Long
	Peter Ventura	Ian Wilshaw	

Members absent: David Bongero Patrick Droze

Mr. Jacob Uhazie, Planning Director, and Stephanie Reece, Program Supervisor, were also present.

Chairman Wilshaw informed the audience that if a petition on tonight's agenda involves a rezoning request, this Commission makes a recommendation to the City Council who, in turn, will hold its own public hearing and make the final determination as to whether a petition is approved or denied. The Planning Commission holds the only public hearing on a request for preliminary plat and/or vacating petition. The Commission's recommendation is forwarded to the City Council for the final determination as to whether a plat is accepted or rejected. If a petition requesting a waiver of use or site plan approval is denied tonight, the petitioner has ten days in which to appeal the decision, in writing, to the City Council. Resolutions adopted by the City Planning Commission become effective seven (7) days after the date of adoption. The Planning Commission and the professional staff have reviewed each of these petitions upon their filing. The staff has furnished the Commission with both approving and denying resolutions, which the Commission may, or may not, use depending on the outcome of the proceedings tonight.

ITEM #2 PETITION 2025-02-02-07 Midwest Freight Storage

Mr. Caramagno, Secretary, announced the first item on the agenda, Petition 2025-02-02-07 submitted by Midwest Freight Storage requesting waiver use approval pursuant to Section 3.17 of the Livonia Zoning Ordinance to operate an outdoor truck and trailer storage facility at 32225 Schoolcraft Road, located on the south side of Schoolcraft Road between Hubbard and Merriman Roads in the Northeast ¼ of Section 27.

Mr. Ventura: I have a conflict on this agenda item, and so I'm going to recuse myself from the proceedings.

Mr. Wilshaw: Now we will go to Mr. Uhazie, to give background information on this petition.

Mr. Uhazie: Thank you, Mr. Chairman, this is a request to operate an outdoor truck and trailer storage facility. The property is currently zoned M-2 (General manufacturing). The subject property is 3.24 acres in area, and has about 200 feet of frontage along Schoolcraft Road with a depth of approximately 712 feet. The rear of the property has another 200 feet of frontage along Industrial Road. There is an existing one-story building, which is 21 feet high and approximately 22,677 square feet in size. The surrounding properties are M-2, as well. The building currently has two tenants leasing space. Approximately 6,000 square feet of the building is used in conjunction with this proposed truck storage for offices and additional storage. Under a separate address, the remaining portion of the building is used as a caregiver grow operation. The rear of the site is currently being used for truck parking. The petitioner owns over a dozen large semi-trucks that use the back vacant lot for parking. They will not be working on these trailers or engines at this location. This is strictly for parking in between routes for their business. They do not transport or store any hazardous or flammable goods on the site. The truck and trailer storage facilities require waiver use approval under the provision set forth in section 3.17 of the zoning ordinance, parking for the trucks and trailers would be allocated to two separate areas shown on the site plan. The site plan identifies one of these areas having 16 existing truck parking spaces located at the rear of the property, which is surrounded on three sides by an existing six-foot-high concrete wall. Along the rear half of the eastern property line, there are an additional nine existing truck parking spaces shown. The site plan identifies a total of 25 parking spaces on this site for trucks. With that I can read out the correspondence.

Mr. Wilshaw: Yes, please.

Mr. Uhazie: Mr. Uhazie: The first item is from the Engineering Division, dated March 12, 2025, which reads as follows: *"In accordance with your request, the Engineering Division has reviewed the above referenced petition. We have no objections to the proposed waiver use at this time but would like to note the following items: 1. The subject parcel is assigned the address of #32225 Schoolcraft Road. Should additional addresses be*

needed, the Owner will need to contact this Department once approvals have been obtained. 2. The existing parcel is currently serviced by public sanitary sewer and water main. The submittal does not include any proposed utility information or calculations, so we cannot comment on any proposed impacts to the existing systems, but we do not believe the proposed usage will adversely affect the existing utilities. 3. Although the submittal does not indicate any utility information, it should be noted the any proposed re-development, such as removing and replacing the parking areas, will be required to provide storm water improvements and detention per the Wayne County Stormwater Ordinance." The letter is signed by David W. Lear, P.E., Assistant City Engineer. The next letter is from the Livonia Fire & Rescue Division, dated March 17, 2025, which reads as follows: *"This office has reviewed the site plan submitted in connection with a request to operate an outdoor truck & trailer storage facility on the property located at the above referenced address. We have no objections to this proposal with the following stipulations: 1. If area is secured by fencing and a mechanical gate, entry inside the gated area by emergency vehicles shall be accessed via keypad code, fob, or key with such options to be secured in a Knox Box. 2. Provide location(s) of closest fire hydrant(s) for this area on the official plan set. A further detailed plan review will take place when this division receives an official plan set."* The letter is signed by Brian Kukla, Fire Marshal. The next letter is from the Division of Police, dated March 13, 2025, which reads as follows: *"I have reviewed the plans in connection with the petition. I have no objections to the proposal."* The letter is signed by Paul Walters, Sergeant, Traffic Bureau. The next letter is from the Inspection Department, dated March 28, 2025, which reads as follows: *"Pursuant to your request, the above-referenced Petition has been reviewed. 1. The parking lot shall be continually maintained in satisfactory condition so as to be safe, attractive, and free of hazards, nuisances, or other unsafe conditions. This Department has no further objections to this Petition."* The letter is signed by Jerome Hanna, Director of Inspection. The next letter is from the Finance Department, dated March 12, 2025, which reads as follows: *I have reviewed the address connected with the above noted petition. The following amounts are due to the City of Livonia: Unpaid water and sewer charges: (Customer name on record - ASPLUNDH CONSTRUCTION) Total Due City of Livonia $740.11."* The letter is signed by Connie Kumpula, Chief Accountant. That is the extent of the correspondence.

Mr. Wilshaw: All right, thank you. Mr. Uhazie, any questions for our staff? I don't see any. Mr. Uhazie, just a quick question. This has been a existing non-conforming use for a long time. This outdoor storage area. Is that correct?

Mr. Uhazie: Correct.

Mr. Wilshaw: And this was just discovered, and they're just trying to get this cleared up, right?

Mr. Uhazie: Correct.

Mr. Wilshaw: Okay, very good. Thank you. Our petitioner is in the audience. I believe. If you can, please come forward to our podium. Good evening. If you can start with your name and address.

Angelo Zannis, Seaway Realty Properties, LLC., 32225 Schoolcraft, Livonia, MI.

Mr. Wilshaw: Good evening. Mr. Zannis, anything else that you'd like to tell us about this request?

Mr. Zannis: Yes, there was an outstanding water bill that was paid on March 31, 2025, and I have the receipt showing that. So, would you like me to provide a copy to you guys?

Mr. Wilshaw: That's fine. Yeah, actually, Ms. Reece can grab that and we'll just make that part of our packet.

Mr. Zannis: Then there were two items that you guys wanted us to address last week at the study session. One of them was the damaged block wall in the southeast corner. I've reached out to our masonry contractor last week; he will be meeting me out there this week to take a look at it. It's about nine square feet of block. It Should be a simple fix there to patch that up. I also reached out to our fence contractor regarding those last 100 feet of fence on the southeast corner as well, which was bowed out and leaning because of large concrete blocks that were existing there from previous tenants. They don't see any issue in getting those fixed. We will have to get a contractor with large machinery to move those concrete blocks away from the fence which caused the issue in the first place, and then at that point, our fencing contractor will come, reset the poles, straighten the fence, and everything should be good,

Mr. Wilshaw: Excellent. Well, thank you for addressing some of those concerns that came up at the study meeting. Yes, let's see if

there's any other questions for you on this petition. Is there any questions for our petitioner?

Mr. Caramagno: I've only got one. First, let me say thanks for following up on the things we talked about last week, because that's nice when a petitioner comes and actually addresses the things we've talked about, or has plans to address it. That's a nice thing to hear. The question I've got for you is, the vehicles you're going to park on this property, trucks, trailers…are they all going to be licensed vehicles?

Mr. Zannis: Yes, they are.

Mr. Caramagno: Okay. That's what I wanted to know. Thank you.

Mr. Zannis: Then just going back to any other repairs that we make. If you guys want us to provide invoices, we are more than happy to do that or pictures.

Mr. Wilshaw: That's excellent. We appreciate that. And if this moves on to City Council, you can always provide that information to them as well. That'll help sort of seal those items up. So, thank you. Any other questions for our petitioner? Anyone in our audience wishing to speak on this item? Anything else you'd like to say before we make our decision?

Mr. Zannis: Nope. Thank you for your time.

Mr. Wilshaw: Well, thank you, Mr. Zannis. Let's close the public hearing at this time and a motion is in order.

On a motion by Caramagno, seconded by Long, and unanimously adopted, it was

#04-12-2025 ***RESOLVED***, That pursuant to a Public Hearing having been held by the City Planning Commission on April 8, 2025, on Petition 2025-02-02-07 submitted by Midwest Freight Storage requesting waiver use approval pursuant to Section 3.17 of the Livonia Zoning Ordinance to operate an outdoor truck and trailer storage facility at 32225 Schoolcraft Road, located on the south side of Schoolcraft Road between Hubbard and Merriman Roads in the Northeast ¼ of Section 27., be approved subject to the following conditions:

1. That the plan, dated February 17, 2025, prepared by Appee/Donnan, Inc., is hereby approved and shall be adhered to;

2. That the maximum number of semi-trucks and semi-trailers parked on the site shall not exceed twenty five (25);

3. That all semi-truck and semi-trailer storage shall be restricted to the confined area of the property as shown on the approved plan;

4. Storage within the storage area shall be limited to semi-trucks and semi-trailers, as shown on the approved plan. Any other special trade contractor or business wishing to occupy or lease space on the property for the outside storage of equipment, vehicles or materials that differ from what is shown on the plan shall first obtain approval of the Planning Commission before obtaining a zoning compliance permit and certificate of occupancy from the City of Livonia Inspection Department and Fire Marshal;

5. That there shall be no outdoor storage of disabled or inoperative equipment and vehicles, scrap material, debris or other similar items;

6. There shall be no storage of flammable, explosive, radioactive, hazardous, toxic, or volatile substances upon the premises;

7. That no minor repairs or maintenance work on vehicles or trailers shall be conducted on this site;

8. That the petitioner shall submit a Letter of Understanding signed by the petitioner and the owner of the underlying real estate indicating that this waiver use will be voluntarily abandoned in the case the petitioner moves from the premises;

9. That the block wall and fencing be repaired to the satisfaction of the Inspection and Planning Departments;

10. That the specific plan referenced in this approving resolution shall be submitted to the Inspection Department at the time permits are applied for; and

11. Pursuant to Section 13.13 of the Livonia Zoning Ordinance, this approval is valid for a period of one year only from the date of approval by City Council, and unless a building permit is obtained, this approval shall be null and void at the expiration of said period.

FURTHER RESOLVED**,** That notice of the above hearing was given in accordance with the provisions of Section 13.13 of Livonia Zoning Ordinance, as amended.

Mr. Wilshaw: Is there any discussion? Would the maker be interested in adding any condition in regards to the repair of the wall or fence, they just be done to the satisfaction of the planning department?

Mr. Caramagno: I am comfortable with the way he presented himself tonight, but we can add that the block wall and the fence needs repair prior to approval.

Mr. Wilshaw, Chairman, declared the motion is carried and the foregoing resolution adopted. It will go on to the City Council with an approving resolution.

CITY OF LIVONIA, MICHIGAN
APPLICATION FOR WAIVER USE APPROVAL

All applications must be presented in triplicate to the City Clerk, 33000 Civic Center Drive, Livonia, MI 48154-3097. Applications **must** include property owner's name, address and notarized signature.

For filing fee see below for computation

Date Filed: 2/28/25 Petition 2025-02-02-07

Site Address: 32225 Schoolcraft Rd Sidwell 105-99-0006-002 Zoning of Property M-1

Requesting Approval To Have trucks with trailers park in 2 acres lot behind building

Applicant: Vasyl Heba Business/Company: Midwest Freight Service Corporation

Applicant's Address: 32225 Schoolcraft Rd City: Livonia State: MI Zip Code: 48150

Applicant's Phone # (248) 894-5259 Applicant's Email info@midwestload.com

Contact Person: Angelo Zannis Business/Company: Seaway Realty Properties LLC

Contact's Address: 31801 Schoolcraft Rd City: Livonia State: MI Zip Code: 48150

Contact's Phone # (248) 444-9010 Contact's Email info@prime-llc.us

Please provide the following information:

1) **Site Plan** showing:
   - property dimensions, including road right-of-way & building setback lines
   - foot print of building(s), including dimensions & square footage
   - all easements, protective walls, sidewalks & existing trees
   - any significant topographic features (existing or proposed)
   - parking layout, including type of surface material, sizes of spaces & aisles
   - method used in calculating parking requirement
   - location of light standards servicing parking lot & cutout showing type & height
   - location of trash receptacle, including description of screening
   - location of signs
2) **Detailed Landscape Plan** including:
   - listing or labeling of all planted materials as to type and size
   - areas to be fully irrigated
   - percentage of landscaping provided (15% of total site required)
3) **Building Elevation Plan** depicting:
   - architectural quality
   - wall section & detail plan - exterior building materials must be labeled (i.e. brick, thin brick, E.F.I.S.)
   - all visible rooftop mechanical equipment and how they will be screened
4) **General Floor Plan** showing:
   - floor layout
   - entrances & exits
   - restaurants are required to illustrate seating arrangement & capacity
5) **One (1) set of reduced plans** (i.e. site, landscape, elevation, floor), **a maximum 11" x 17" in size, or digital file in a .pdf format either on CD or emailed to** planning@livonia.gov
6) **Legal Description** of the property to be considered (Clearly Printed)
7) Two (2) completed application forms & **two (2)** sets of full-size drawings

RECEIVED
OFFICE OF THE CITY CLERK
2025 FEB 28 PM 1:24

You are invited and encouraged to review your proposal with the Planning Department staff. Only one set of preliminary drawings will be necessary for this analysis.

FEE COMPUTATION **$700.00 ($400 publication fee plus $300 base review fee) plus**

_____ sq. ft. of new construction x $20.00 per 1,000 sq. ft. or $30 per lot or unit for residential construction. Total Amount Due $ _____

Owner of Property: Seaway Realty Properties LLC

Owner's Address: 31801 Schoolcraft Rd City: Livonia State: MI Zip Code: 48150

Owner's Phone # (248) 444-9010 Owner's Email info@prime-llc.us

Signature of Owner: Irene Zannis Print Name: Irene Zannis

Subscribed and sworn to before me, a Notary Public in and for the County of Wayne State of Michigan

on this 28 day of February 2025.

Signature of Notary _____ My commission expires _____,

Acting in the County of _____

TULA P. VLAHAKIS
Notary Public, State of Michigan
County of Wayne
My Commission Expires May 05, 2028
Acting in the County of Wayne

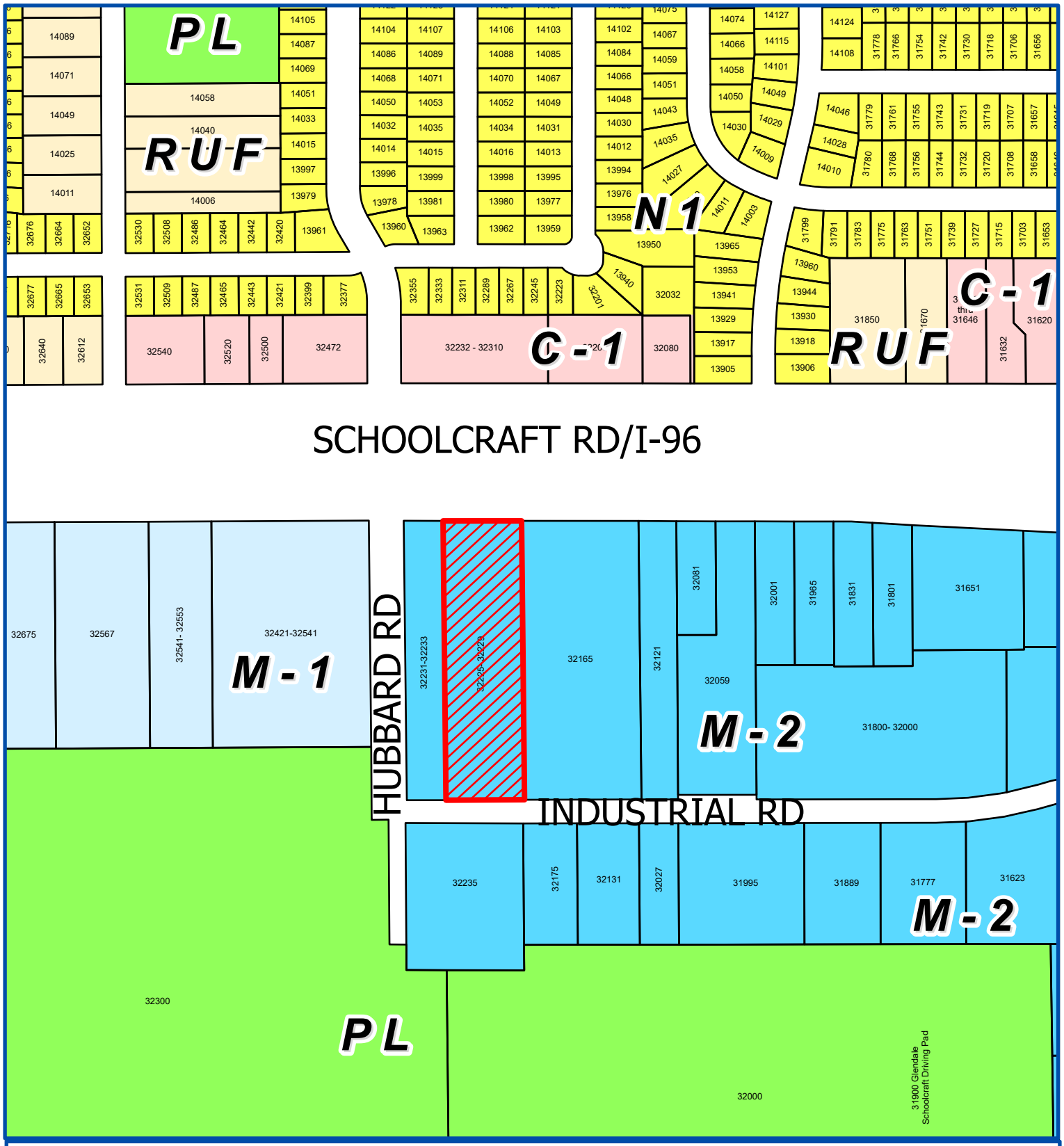

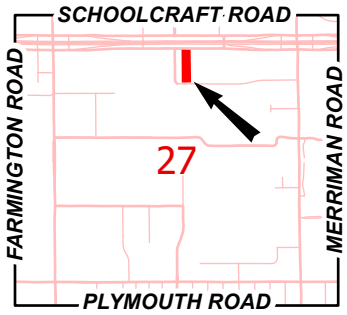

Address & Zoning Map

Petition 2025-02-02-07
Midwest Freight Storage
32225 Schoolcraft Road

N

Not to Scale

City of Livonia
Planning Department

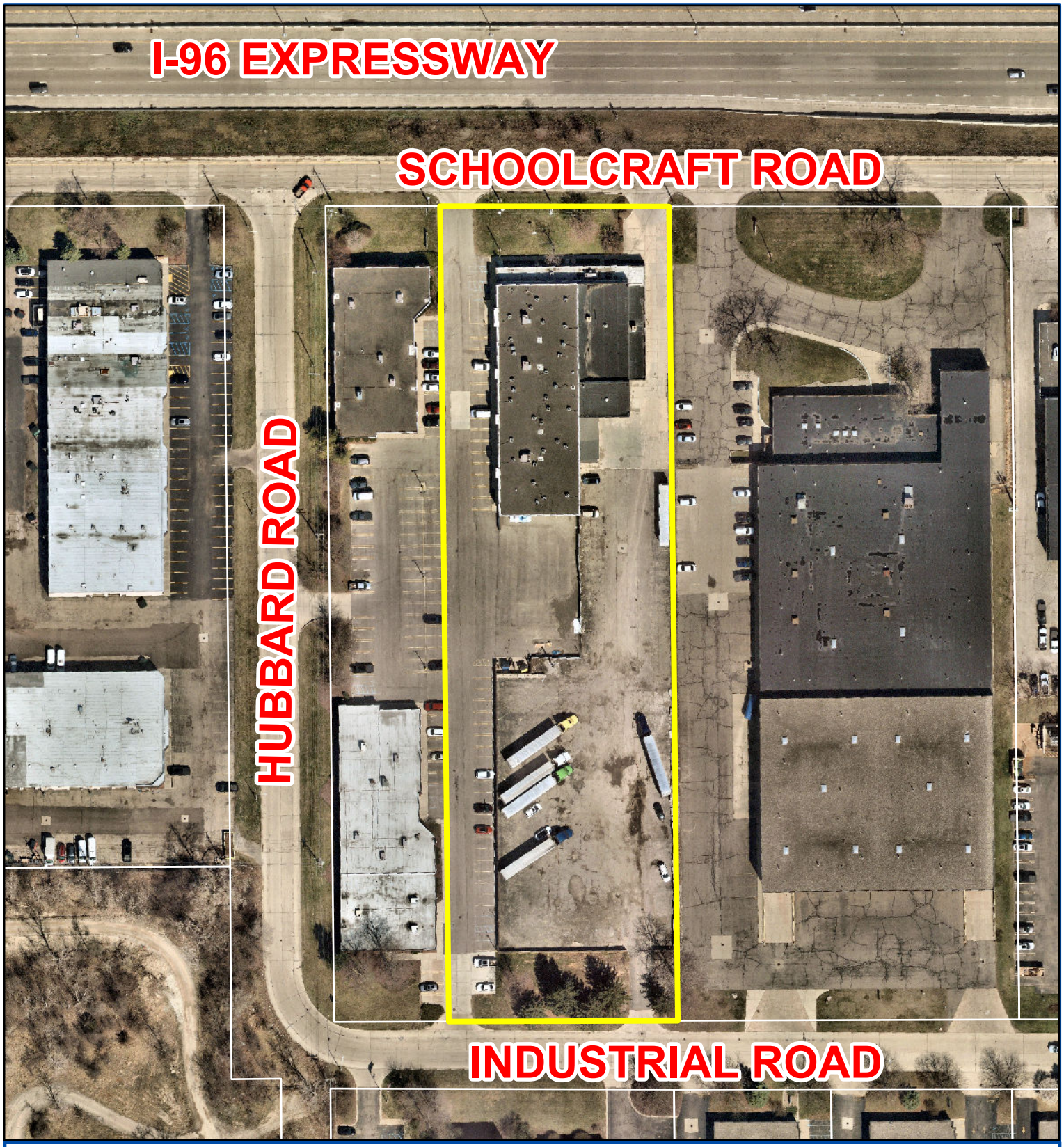

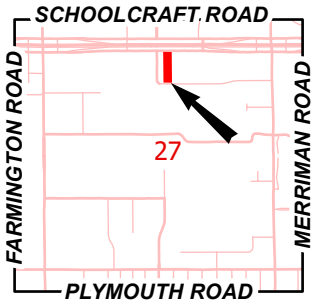

Aerial Map

Petition 2025-02-02-07
Midwest Freight Storage
32225 Schoolcraft Road

N

Not to Scale

City of Livonia
Planning Department

PLANNING COMMISSION STAFF NOTES

PUBLIC HEARING

ITEM 2

Petition 2025-02-02-07 submitted by Midwest Freight Storage requesting waiver use approval pursuant to Section 3.17 of the Livonia Zoning Ordinance to operate an outdoor truck and trailer storage facility at 32225 Schoolcraft Road, located on the south side of Schoolcraft Road between Hubbard and Merriman Roads in the Northeast ¼ of Section 27.

April 1, 2025: Study Meeting:

This petition seeks waiver use approval to operate an outdoor truck and trailer storage facility. The subject property is 3.24 acres in area, with 200 feet of frontage along Schoolcraft Road and a depth of approximately 712 feet. The rear of the property has 200 feet of frontage along Industrial Road. The existing one-story building is 21 feet in height and approximately 22,677 square feet in size. The property is zoned M-2 (General Manufacturing).

The building currently has two (2) tenants leasing space. Approximately 6,000 square feet of building space is used in conjunction with the proposed truck storage for offices and storage. Under a separate address the remining portion of the building is used for care giver grow operations. The rear of the site is currently being used for truck parking.

Truck and trailers storage facilities require waiver use approval under the provisions set forth in Section 3.17 of The Livonia Zoning Ordinance. Parking for the trucks and trailers would be allocated in two (2) separate areas of the site. The site plan identifies 16 existing truck parking spaces located at the rear of the property. This parking area is surrounded on three (3) sides by an existing six foot (6') high concrete wall. Along the rear half of the eastern property line an additional nine (9) existing truck parking spaces are shown. The site plan identifies a total of 25 truck parking spaces.

The site is roughly split in half, with separate access drives for the east and west drives. The two halves are separated by existing fencing and walls. Two (2) gated drives would provide access to the truck parking area, one to the northeast and the other to the southeast of the site. The site plan shows an additional 15 proposed double striped parking spaces.

Access to the other half of the site's parking lot is provided via drives in the northwest and southwest. The drives provide access to an additional 19 parking spaces, including three (3) barrier free, along the western side of the existing building. An additional 25 parking spaces, including two (2) barrier free to the west of the existing concrete wall at the rear of the site are shown.

No other site changes or improvements, including to the elevations of the building or the site's landscaping, are proposed as part of this petition.

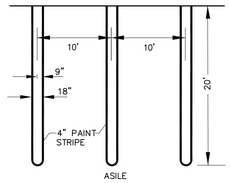

PROPOSED CAR PARKING STALL
NOT TO SCALE

PROPERTY DESCRIPTION

105-99-0006-002

THE EAST 200.00 FEET OF THE WEST 343.00 FEET OF THE NORTH 1/4 OF THE NORTHEAST 1/4 OF SECTION 27, TOWN 1 SOUTH, RANGE 9 EAST, EXCEPT THE NORTH 248.00 FEET THEREOF. ALSO EXCEPT THE SOUTH 369.50 FEET THEREOF. CONTAINING 3.27 ACRES

LEGEND
- LIGHT POLE
- CATCH BASIN/MANHOLE
- MONITORING WELL
- GUARD POST

30 0 15 30
SCALE: 1 IN. = 30 FT.

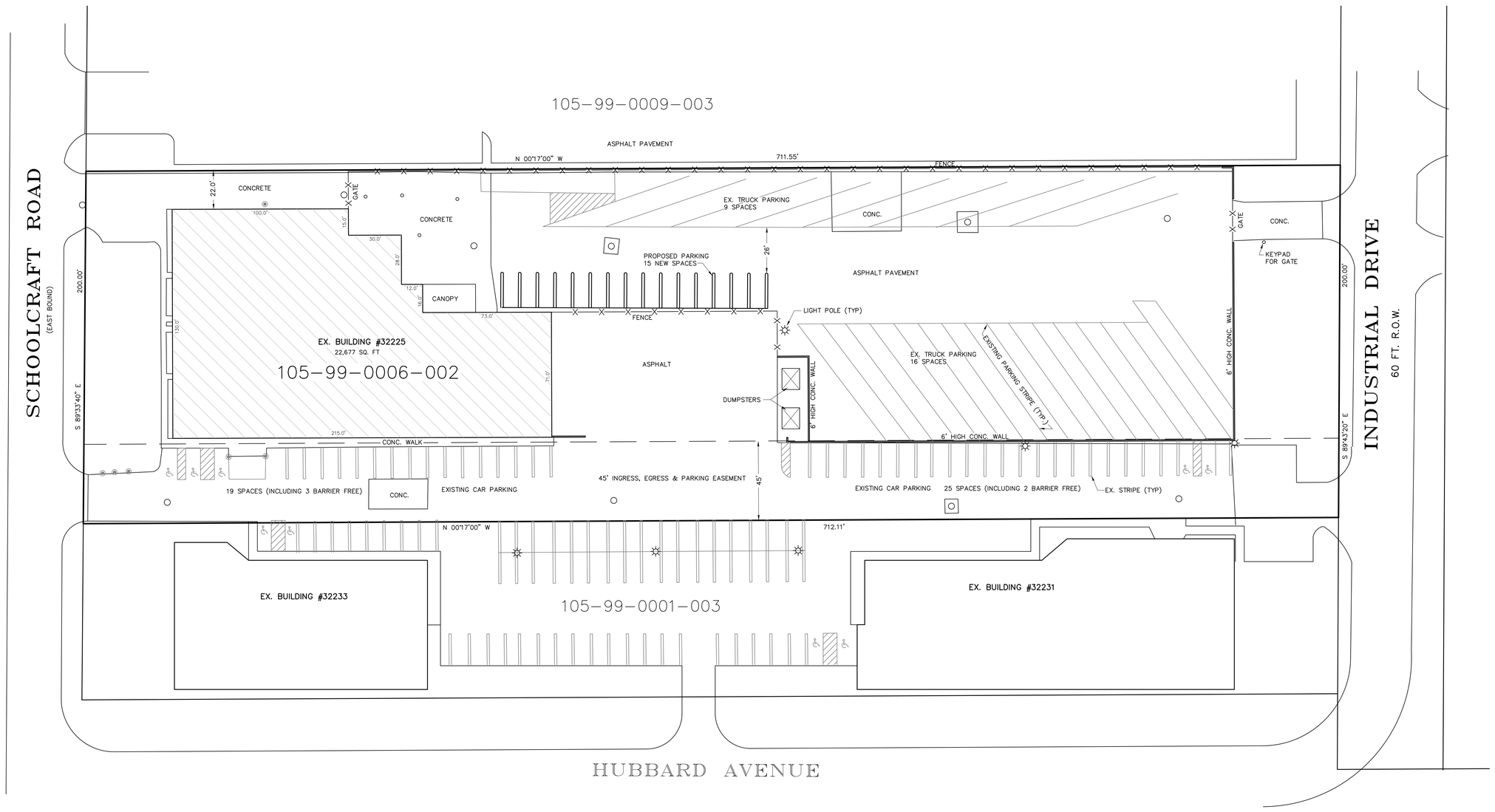

WILLIAM DONNAN
PROFESSIONAL SURVEYOR
LICENSE NO. 63483

REVISIONS

PREPARED FOR
SEAWAY REALTY PROPERTIES, LLC
31801 SCHOOLCRAFT
LIVONIA, MI 48150

ARPEE/DONNAN, INC.
LAND SURVEYING · ENGINEERING · MAPPING
32233 SCHOOLCRAFT RD. SUITE 103
LIVONIA, MICHIGAN 48150
PHONE (734) 953-3335 FAX (734) 953-3324

SITE PLAN

PARCEL: 105-99-0006-002
32225 SCHOOLCRAFT RD., LIVONIA,
WAYNE COUNTY, MICHIGAN

DATE	02/17/25
DRAFTED BY	WRD
CHECKED BY	WGD
F.B.	
FILE:	
JOB #	25005

SH. 1 OF 1

CORRESPONDENCE

DEPARTMENT OF PUBLIC WORKS
ENGINEERING DIVISION

TODD J. ZILINCIK, P.E.
CITY ENGINEER

DAVID W. LEAR, P.E.
ASST. CITY ENGINEER

MAUREEN MILLER BROSNAN
MAYOR

DONALD R ROHRAFF
DIRECTOR OF PUBLIC WORKS

12973 FARMINGTON ROAD
LIVONIA, MICHIGAN 48150
(734) 466-2571
FAX: (734) 466-2195

March 12, 2025

Mr. Kristoffer Canty
Planner IV
City of Livonia

Re: Petition 2025-02-02-07 – #32225 Schoolcraft Road (Midwest Freight Storage)

Dear Mr. Canty:

In accordance with your request, the Engineering Division has reviewed the above referenced petition. We have no objections to the proposed waiver use at this time, but would like to note the following items:

1. The subject parcel is assigned the address of **#32225 Schoolcraft Road**. Should additional addresses be needed, the Owner will need to contact this Department once approvals have been obtained.

2. The existing parcel is currently serviced by public sanitary sewer and water main. The submittal does not include any proposed utility information or calculations, so we cannot comment on any proposed impacts to the existing systems, but we do not believe the proposed usage will adversely affect the existing utilities.

3. Although the submittal does not indicate any utility information, it should be noted the any proposed re-development, such as removing and replacing the parking areas, will be required to provide storm water improvements and detention per the Wayne County Stormwater Ordinance.

Should you have any additional questions on this matter, please feel free to contact myself at (734) 466-2608 or the City Engineer, Mr. Todd Zilincik at (734) 466-2561. If you would prefer, you can e-mail either of us at dlear@livonia.gov or tzilincik@livonia.gov.

Sincerely,

David W. Lear, P.E.
Assistant City Engineer

cc: 2025 Petition File

M:\ALL OTHER MATTERS\Planning Petition Responses\2025\2025-02-02-07 – 32225 Schoolcraft Road.doc

DEPARTMENT OF PUBLIC SAFETY
LIVONIA FIRE & RESCUE

ROBERT JENNISON
FIRE CHIEF

MAUREEN MILLER BROSNAN
MAYOR

14910 FARMINGTON ROAD
LIVONIA, MICHIGAN 48154-5419
734-466-2444
734-466-2082 fax

DATE: March 17, 2025

TO: Kristoffer Canty, Planner IV

FROM: Livonia Fire Prevention Division

SUBJECT: Petition 2025-02-02-07 Freight Storage for 32225 Schoolcraft

This office has reviewed the site plan submitted in connection with a request to operate an outdoor truck & trailer storage facility on the property located at the above referenced address.

We have no objections to this proposal with the following stipulations:

1. If area is secured by fencing and a mechanical gate, entry inside the gated area by emergency vehicles shall be accessed via a keypad code, fob, or key with such options to be secured in a Knox Box.
2. Provide location(s) of closest fire hydrant(s) for this area on the official plan set.

A further detailed plan review will take place when this division receives an official plan set.

Sincerely,

Brian Kukla

Brian Kukla
Fire Marshal

DEPARTMENT OF PUBLIC SAFETY
DIVISION OF POLICE

THOMAS GORALSKI
CHIEF OF POLICE

MAUREEN MILLER BROSNAN
MAYOR

15050 Farmington Road
Livonia, Michigan 48154-5499
(734) 466-2470
FAX: (734) 261-2265

March 13th 2025

Mr. Scott Miller
City of Livonia Planning Dept
33000 Civic Center Drive
Livonia, MI 48154

Re: Petitions 2025-02-02-07 – 32225 Schoolcraft

Mr. Miller,

I have reviewed the plans in connection with the petition. I have no objections to the proposals.

Please feel free to contact me, should you have any questions.

Sincerely,

FOR THE CHIEF OF POLICE,

Paul Walters, Sergeant
Traffic Bureau
(734) 466-2107

INSPECTION DEPARTMENT

BUILDING
HEATING
PLUMBING
ELECTRICAL
ZONING
ENVIRONMENTAL PROTECTION
ORDINANCE ENFORCEMENT

MAUREEN MILLER BROSNAN
MAYOR

JEROME A. HANNA
DIRECTOR

33000 CIVIC CENTER DRIVE
LIVONIA, MICHIGAN 48154-3097
(734) 466-2580
FAX: (734) 466-2095

Date: March 28, 2025

To: Kristoffer Canty

From: Jerome Hanna

RE: Petition 2025-02-02-07 - 32225 Schoolcraft - Freight Storage

Pursuant to your request, the above-referenced Petition has been reviewed.

1. The parking lot shall be continually maintained in satisfactory condition so as to be safe, attractive, and free of hazards, nuisances, or other unsafe conditions.

This Department has no further objections to this Petition.

I trust this provides the requested information.

Jerome Hanna
Jerome Hanna
Director of Inspection

DEPARTMENT OF FINANCE

Debra Peck Lichtenberg, CPA
DIRECTOR OF FINANCE

Connie Kumpula
CHIEF ACCOUNTANT

MAUREEN MILLER BROSNAN
MAYOR

33000 CIVIC CENTER DRIVE
LIVONIA, MICHIGAN 48154-3097
(734) 466-2260
FAX: (734) 421-1807

March 12, 2025

Kristoffer Canty
Planning Commission
33000 Civic Center Drive
Livonia, MI 48154

Petition 2025-02-02-07 –32225 Schoolcraft Road

Dear Kristoffer,

I have reviewed the address connected with the above noted petition. The following amounts are due to the City of Livonia:

Unpaid water and sewer charges: (Customer name on record - ASPLUNDH CONSTRUCTION)	$	740.11
Total Due City of Livonia	$	740.11

Please contact me if you have any further questions.

Very truly yours,

Connie Kumpula
Chief Accountant

CK: sc

Transaction Statement

Service Address
32225 SCHOOLCRAFT LIVONIA, MI 48150

Mailing Address
ASPLUNDH CONSTRUCTION 32225 SCHOOLCRAFT LIVONIA, MI 48150

Account Number	Amount Due
020100100-001	$740.11

Account Number	From - Through
020100100-001	09/12/2024 - 03/12/2025

Services
Water & Sewer - Metered

Service Address
32225 SCHOOLCRAFT LIVONIA, MI 48150

Beginning Balance
$1,030.94

Date	Type	Amount	Description
09/16/2024	Penalty	$103.10	
10/14/2024	Bad Debt	($659.43)	Adjustment Reason: Transfer
11/15/2024	Bill	$103.83	Due Date 12/10/2024
12/16/2024	Penalty	$57.84	
02/14/2025	Bill	$103.83	Due Date 03/10/2025

Total Due
$740.11

Transaction Statement

Account Number	020100100-001

TREASURER

OTHER ITEMS RELATED TO THE PETITION

NEW DATA RECEIVED FOR THE STUDY MEETING OF MAY 19, 2025

From: noreply@civicplus.com
To: CityCouncil
Subject: Online Form Submittal: City Council Inquiries
Date: Thursday, May 15, 2025 1:27:03 PM

City Council Inquiries

This form is for any questions, comments, or concerns you may have for the City in regards to city council meetings or other city council inquiries. If you leave contact information, the City will reply within 2 business days. If this is an emergency, please dial 9-1-1.

First Name	Erik
Last Name	Kuszynski
Address	37734 Pickford Dr.
Email Address	erikkuszynski@gmail.com
Phone Number	313-378-6794
Topic	City Council Meetings
Date of Issue	5/15/2025
Attachment (Optional)	*Field not completed.*
Comments	I am writing with respect to two petitions that will be before the council on Monday May 19th. Unfortunately I will not be able to attend the meeting in person, but I wanted to express my opinion to the council. The first is Item 10 on the agenda, the petition by Leo Sove to build an office building at 37739 Seven Mile Rd. I was the person who worked with Leo and former councilman Joe Laura to address the concerns of residents when the existing office building to the west was constructed. Although the majority of the residents were not in favor of the development, I was relieved that Leo was open to making some modifications to his site plan to address some of the residents' concerns. In hindsight, I haven't seen any problems with the building and I appreciate that Leo is a responsible and responsive landlord. After watching the planning commission meeting on this development and reviewing the site plans myself, I am in favor of this plan, subject to the concerns that we brought up at the planning commission meeting. The only comment I would have is that the landscape plan calls for white pine trees to be planted on the south side of the property. There are above ground utility lines at that location and knowing that mature white pine trees are tall and tend to drop limbs in severe winds, I think a different

species of tree or shrub may be a better fit for that location. Other than that, I think this is a fine plan and I look forward to this parcel being used.

The other item I would like to speak in support of is item 8, the BMW motorcycle dealership on the site of the former Doc's Sports Retreat. I think the planning commission did a fine job of looking at the pertinent issues. I was not impressed with the petitioner's preparation for this particular presentation. They seemed to be a little short on some details, but I applaud the planning commission for asking for clarification. Nevertheless, I do believe that this proposal should be approved subject to the respective city departments reviewing the items such as signage, lighting and landscaping.

Thank you for your time and I look forward to both these projects moving forward.

Sincerely,
Erik Kuszynski
37734 Pickford Dr.
Livonia, MI 48152

Email not displaying correctly? View it in your browser.

LETTER TO THE LIVONIA CITY COUNCIL

8.

Planning
May 2, 2025

MEETING DATE	PRESENTED BY
S051925/R060225	Mark Taormina, Planning and Economic Development Director

AGENDA ITEM

SITE PLAN PETITION: Planning Commission, re: Petition 2022-08-08-04 submitted by Future Land Holdings. L.L.C., requesting to amend a previously approved site plan (CR 354-22) to repurpose and expand the former restaurant building at 19265 Victor Parkway to operate a BMW motorcycle dealership, located on the west side of Victor Parkway between Seven Mile Road and Pembroke Avenue in the Southeast ¼ of Section 6.

BACKGROUND DETAILS

May 2, 2025

Honorable Members of the City Council
City of Livonia, Michigan

Re: Petition 2022-08-08-04 - Future Land Holdings, LLC

Dear Council Members:

At the 1,229th Meeting held by the Livonia City Planning Commission on April 29, 2025, the following resolution was adopted:

PREFERRED COUNCIL RECOMMENDATION/RESOLUTION (Please complete this field. Attachments are not to be used in lieu of the recommendation)

#04-17-2025 RESOLVED, That the Planning Commission does hereby recommend to the City Council that on Petition 2022-08-08-04 submitted by Future Land Holdings. L.L.C., under Sections 13.13 of the Livonia Zoning Ordinance, requesting to amend a previously approved site plan (CR 354-22) to repurpose and expand the former restaurant building at 19265 Victor Parkway to operate a BMW motorcycle dealership, located on the west side of Victor Parkway between Seven Mile Road and Pembroke Avenue in the Southeast ¼ of Section 6, be approved subject to the following conditions:

1. That the General Site Plan, identified as Sheet No. C-400, dated March 3, 2025, as revised, prepared by Priority Engineering, is hereby approved and shall be adhered to.

2. That the Grading Plan, identified as Sheet No. C-500, dated March 3, 2025, as revised, prepared by Priority Engineering, is hereby approved and shall be adhered to.

3. That the Elevations Plan, identified as Sheet No. ELEV2, dated December 3, 2024, as revised, prepared by JJV Design Group, is hereby approved and shall be adhered to.

4. That the access driveway and parking lot shall be repaired, resealed, and restriped as necessary to the satisfaction of the Inspection Department.

5. Parking spaces shall be doubled striped at ten feet (10') wide by twenty feet (20') in length.

6. That all exterior light fixtures shall not exceed twenty feet (20') in height and shall be aimed and shielded to minimize stray light trespassing across property lines and glaring into adjacent roadway.

7. That except for what may be authorized under the Zoning Ordinance as part of a temporary sales event, any type of exterior advertising related to the sale of the vehicles designed to attract the attention of passing motorists, such as promotional flags or streamers, shall be prohibited.

8. That there shall be no outdoor storage of vehicle parts, equipment, scrap material, waste petroleum products, junked, unlicensed or inoperable vehicles, or other similar items in connection with this operation, and the overhead doors, when not in use for vehicles entering or exiting the service facility, shall be closed at all times.

9. That only conforming signage is approved with this petition, and any additional signage shall be separately submitted for review and approval by the Zoning Board of Appeals.

10. That the LED lightband fixture shall be hidden and not visible; the light color shall remain white at all times as represented in rendering on Sheet No. ELEV1, dated December 3, 2024, as revised, prepared by JJV Design Group; and approved by the Planning and Inspection departments;

11. That the specific plans referenced in this approving resolution shall be submitted to the Inspection Department at the time the building permits are applied for; and,

12. Pursuant to Section 13.13 of the Livonia Vision 21 Zoning Ordinance, this approval is valid for a period of one year only from the date of approval by City Council, and unless a building permit is obtained, this approval shall be null and void at the expiration of said period.

ATTACHMENTS

1. 2022-08-08-04_Amendment E-COUNCIL Pkt

APPROVED BY

Date: May 05, 2025

Mark Taormina, Planning and Economic Development Director

Date: May 07, 2025

Maureen Miller Brosnan, Mayor

Petition 2022-08-08-04 submitted by Future Land Holdings. L.L.C., under Sections 13.13 of the Livonia Zoning Ordinance, requesting to amend a previously approved site plan to repurpose and expand the former restaurant building at 19265 Victor Parkway to operate a BMW motorcycle dealership, located on the west side of Victor Parkway between Seven Mile Road and Pembroke Avenue in the Southeast ¼ of Section 6.

BMW MOTORCYCLES
SOUTHEAST MICHIGAN

3/27/25

Mark Taormina
City of Livonia

RE: 19265 Victor Parkway, Livonia MI 48152

Please accept this letter as notification that CJK Investments, LLC - DBA BMW Motorcycles of Southeast Michigan is requesting an amendment to the previously approved site plan, Petition 2022-08-08-04.

If you have any questions, please contact me at (248) 719-4200.

Sincerely,

Charles Knoll
President

BMW MOTORCYCLES OF SOUTHEAST MICHIGAN

14855 Sheldon Rd. Plymouth, MI 48170 - P: 734.453.0500 - F: 734.453.0510

UNAPPROVED MINUTES

MINUTES OF THE 1,229th PUBLIC HEARINGS AND REGULAR MEETING HELD BY THE CITY PLANNING COMMISSION OF THE CITY OF LIVONIA

On Tuesday, April 29, 2025, the City Planning Commission of the City of Livonia held its 1,229th Public Hearing and Regular Meetings in the Livonia City Hall, 33000 Civic Center Drive, Livonia, Michigan.

Mr. Ian Wilshaw, Chairman, called the meeting to order at 7 p.m.

Members present:	Wafa Dinaro	Patrick Droze	Sam Caramagno
	Glen Long	Peter Ventura	Ian Wilshaw

Members absent: David Bongero

Mr. Jacob Uhazie, Planning Director, and Stephanie Reece, Program Supervisor, were also present.

Chairman Wilshaw informed the audience that if a petition on tonight's agenda involves a rezoning request, this Commission makes a recommendation to the City Council who, in turn, will hold its own public hearing and make the final determination as to whether a petition is approved or denied. The Planning Commission holds the only public hearing on a request for preliminary plat and/or vacating petition. The Commission's recommendation is forwarded to the City Council for the final determination as to whether a plat is accepted or rejected. If a petition requesting a waiver of use or site plan approval is denied tonight, the petitioner has ten days in which to appeal the decision, in writing, to the City Council. Resolutions adopted by the City Planning Commission become effective seven (7) days after the date of adoption. The Planning Commission and the professional staff have reviewed each of these petitions upon their filing. The staff has furnished the Commission with both approving and denying resolutions, which the Commission may, or may not, use depending on the outcome of the proceedings tonight.

ITEM #3 PETITION 2022-08-08-04 Future Land Holding, LLC

Mr. Caramagno, Secretary, announced the first item on the agenda, Petition 2022-08-08-04 submitted by Future Land Holdings. L.L.C., under Sections 13.13 of the Livonia Zoning Ordinance, requesting to amend a previously approved site plan to repurpose and expand the former restaurant building at 19265 Victor Parkway to operate a BMW motorcycle dealership, located on the west side of Victor Parkway between Seven Mile Road and Pembroke Avenue in the Southeast ¼ of Section 6.

Mr. Uhazie: Thank you. Mr. Chair. This petition involves amending the plan originally approved by City Council in December of 2022. The redevelopment of this site is the former Doc's Sports Retreat located on Victor Parkway. The plan is to repurpose the existing 14,382 square foot restaurant and add a 3,590-foot square foot building addition for the purpose of operating a BMW motorcycle dealership. The former restaurant is, as I mentioned, just over 14,000 square feet, and the entire property is zoned C-4 which is High rise commercial. Motorcycle sales, service and repair establishments are included under the definition of retail sales and treated as permitted use in the C-4 district. In June of 2019, the site was rezoned from C-2 to C-4 which allows for buildings up to a maximum height of six stories in height. The rezoning was needed to facilitate the approval of a new six story dual branded hotel, but the hotel was never developed. Lying immediately to the north of the subject property is the Los Amigos Don Juan restaurant and Dave and Busters arcade and bar. Both are zoned C-2. To the south is a retention pond used for detaining storm water for portions of the Victor Corporate Parkway. To the east, across Victor Parkway are residential homes that front Northland Road, and abutting the site to the west is the I-275/I-96 expressway. The irregularly shaped parcel located 800 feet north of Seven Mile Road measures 3.21 acres in size, with roughly 193 feet of frontage along Victor Parkway. The site has 312 feet along the rear property line bordering the expressway. Parking would be provided on the east and west sides of the building. The existing drive approach on Victor Parkway would remain in its current location. Secondary access to the site would be available from the adjacent commercial parcel to the north via a cross-access agreement that has been in place for many years. It should be also pointed out that the existing parking lot along the frontage of Victor Parkway would be preserved and contains 15 parking spaces. In the C-4 district along the north and south sides of the property the ordinance allows for zero setback subject to applicable building and fire codes. The addition of the building complies with all required setbacks. The existing dumpster enclosure with gates would remain on the property. The petitioner is proposing a rolling gate to block entrance to the eastern parking lot. A new fire hydrant location is proposed to the northwest of the building. The existing ADA stalls should be restriped as needed to conform to the minimum ADA width and specifications. For motorcycle dealers, required off street parking is based on the following: one space for each 150 square foot of showroom area, plus one space for each 500 feet of serviceable floor area. The floor plan

shows 7,150 square feet of showroom and 7,788 square feet of service area. The zoning ordinance would require 64 parking spaces. The site plan shows parking consisting of 15 spots along Victor Parkway and an additional 193 existing spots in the parking lot behind the building. The parking minimum is satisfied. Storm water from the site would be managed using the existing detention basin located adjacent to the site's southern property line. Pursuant to Section 10.03 of the zoning ordinance, no fewer than four full size trees and two ornamental trees and 35 shrubs are required along the site's Victor Parkway street frontage. The plan shows that the existing landscaping along Victor Parkway would remain as is. This area currently contains six pine trees. Each island would also contain at least one tree. Landscape green belts would be created along the perimeter of the site to help screen the site from the adjacent properties and the expressway. These areas will be planted with a variety of planting materials, including honey locusts, red maple trees and burning bushes. The designs of the building exterior will have a new facade complete with black E.I.F.S corrugated aluminum panel, black ACM aluminum and tall BMW column will be constructed with black ACM aluminum panel. The submitted elevation plans show a number of wall signs in the building. Any signage in excess of what is permitted by the sign ordinance would require a variance from the Zoning Board of Appeals. With that, Mr. Chairman, I can read out the departmental correspondence.

Mr. Wilshaw: Yes, please.

Mr. Uhazie: The first item is from the Engineering Division, dated April 4, 2025, which reads as follows: *"In accordance with your request, the Engineering Division has reviewed the above referenced petition. We have no objections to the proposed project at this time, but would like to note the following items: 1. The subject parcel is assigned the address of #19265 Victor Parkway. Should additional addresses be needed, the Owner will need to contact this Department once approvals have been obtained. 2. The existing parcel is currently serviced by public sanitary sewer and water main, as well as private storm sewer. The Developer should Engineering drawings and calculations to this department once approvals for the site plans have been received to determine if permits will be required. Based on the submitted drawings, we have the following comments: i) Sanitary Sewer: The drawings do not include a basis of design for the proposed sanitary sewer outlet, but we do not believe the change in use will negatively impact the existing system. The*

developer will be required to clean and televise the existing sanitary sewer lead if it is to be re-used. If the condition is not sufficient for re-use, a new service will need to be installed to the parcel. ii) Water Main: The drawings indicate that the existing water service will be re- used for the proposed dealership. iii) Storm Sewer: The drawings indicate that the existing private storm system will remain be modified along building frontage. Detention was previously provided for the parcel, so no additional detention will be required." The letter is signed by David W. Lear, P.E., Assistant City Engineer. The next letter is from the Livonia Fire & Rescue Division, dated April 10, 2025, which reads as follows: *"This office has reviewed the site plan submitted in connection with a r quest to construct a commercial building on property located at the above referenced address. We have no objections to this proposal. May require permits and plans for fire suppression and fire alarm. A future detailed plan review will take place when this division receives an official plan set."* The letter is signed by Brian Kukla, Fire Marshal. The next letter is from the Division of Police, dated April 3, 2025, which reads as follows: *"I have reviewed the plans in connection with the petition. I have no objections to the proposal."* The letter is signed by Paul Walters, Sergeant, Traffic Bureau. The next letter is from the Inspection Department, dated April 21, 2025, which reads as follows: *"Pursuant to your request, the above-referenced Petition has been reviewed. 1. The existing parking lot and access drive are in disrepair. The access drive and parking area that is intended to be used shall be replaced as necessary. 2. The petitioner's proposal is a change in use. This would require that the proposed space must conform to all current barrier free codes, building codes and all mechanical codes and standards. This will be addressed further at time of plan review if this project moves forward. 3. Signage has not been reviewed. All signage shall conform to the ordinance. A variance from the Zoning Board of Appeals would be required for any non-conforming signage. This Department has no further objections to this Petition."* The letter is signed by Jerome Hanna, Director of Inspection. The next letter is from the Finance Department, dated April 11, 2025, which reads as follows: *"I have reviewed the address connected with the above noted petition. The following amounts are due to the City of Livonia: Unpaid water and sewer charges: (Customer name on record-Future Land Holdings) Total Due City of Livonia $2,721.87."* We have a receipt for that payment. The letter is signed by Connie Kumpula, Chief Accountant. The next letter is from the Treasurer's Department, dated June 13, 2025, which reads as

follows: *"Attention Planning Commission, Unpaid property taxes are owed on 19265 Victor Parkway. The total owed is $26,207.55. Payable to Wayne County."* We also have a receipt for that payment. The letter is signed by Susie Nash, Treasurer. That is the extent of the correspondence.

Mr. Wilshaw: Is there any questions for our planning staff?

Mr. Caramagno: I've got a couple questions.

Mr. Wilshaw: Go ahead.

Mr. Caramagno: I didn't pick up on this last time, I don't think, but when we're talking about signage for this building, that BMW signs 53 feet tall.

Mr. Uhazie: Yeah, correct.

Mr. Caramagno: Taller than the entire building by 13 feet.

Mr. Uhazie: I believe so.

Mr. Caramagno: What is considered the measurement of the sign? Is it just the motor rod and the BMW logo, or is it the entire 53-foot sign?

Mr. Uhazie: I believe it would be from where the text starts, not the entire black box, but the actual signage, like the lettering and design elements.

Mr. Caramagno: Okay, so, this element. This is a separate standing structure. It's not part of the building, is it?

Mr. Uhazie: I believe it is part of the building. I guess it is a standing structure that is attached at the base, correction I believe it would be a separate structure, stand alone.

Mr. Caramagno: It's absolutely huge. I can't think of anything anywhere else that's this big in the city. I realize this is sets back off the freeway. I get that, but this is, this is a really, really big sign for this building. Really big. It looks like it's not part of the structure. It's separate. And I think that that might be an issue down the road. The second question I've got for you is, I see there's LED on the building. I know we've had some issues with LED or not allowing LED. Is this okay on this building, or is that an issue that gets hit?

Mr. Uhazie: Well, I guess that'd be up to the commissioners here, if they are comfortable with that or not.

Mr. Caramagno: Okay? So, this is similar to…we don't allow it on the gas stations. Yet, this has led on it, so maybe ask the petitioner how long it's going to run, what the plan is for that. Okay, thank you.

Mr. Wilshaw: Thank you, Mr. Caramagno.

Mr. Droze: Mr. Caramagno covered my comment. It was about the LED signage. And then maybe a question similar to what you were saying, Mr. Caramagno, is, I mean, that's an architectural element, but it's also lit up. Is that part of "the sign" too, you know, there's a bit of a gray area there. I think that it would be worth chatting about here at the table.

Mr. Wilshaw: Yeah, there's going to be some discussion around the fact, is this tower element part of the building, or is it strictly serving as a sign? So that's a question we can talk with the petitioner about. Any other questions?

Ms. Dinaro: The signage will still have to go to zoning, correct?

Mr. Uhazie: Yes.

Mr. Wilshaw: Thank you. Ms. Dinaro. Any other questions for planning staff? Alright, our petitioner is in the audience. Feel free to come forward. Good evening, sir.

John Jawvirya 1565 Kirkway, Bloomfield Hills, MI. I'm representing the BMW dealership. Thank you for being here tonight. I. Uh, what would you like to tell us about your business?

Mr. Jawvirya: I'm the design builder of the project. They have existing motorcycle dealerships. It's in Plymouth, I believe, on Sheldon and Five Mile. I personally have bought a couple of motorcycles from them. So, I'm a good client of his. He's been around for a long time. He's got a good reputation. He does very good business. I think this location will be…the ideas we're creating, kind of a monument for him. And it should be, you know, the location should be excellent, I believe.

Mr. Wilshaw: Now, your client came to us before with a petition for this property to build a whole freestanding building closer to the freeway, which was going to be much larger, and now we're seeing more of a reuse of the existing building with some

additions and corrections and so on, to accommodate the dealership in this location. Is there more about that that you would like to expand upon?

Mr. Jawvirya: So, I was brought to the project at this point. I wasn't part of the original submission, so I don't know the whole history of that. I'm assuming the cost of construction was probably a big motivation not to do that project. And I believe he was working with Mark Taormina, discussing to salvage some of the existing building, repurpose it. So that was kind of our design challenge is to make the restaurant turn into a dealership.

Mr. Wilshaw: Okay, alright, so a little bit more work for you. Let's see if there's any questions from any of the commissioners for you, and we'll go from there. Any questions for our petitioner?

Ms. Dinaro: I have a couple. One, cran you tell me what you're going to do with the driveway? Is that going to be repaved? Is it going to be redone? Is the whole parking lot going to be redone?

Mr. Jawvirya: The lot is going to be redone. Okay, whether it's a topcoat and they…what's the term called when they grind it up and repurpose it? I think that's probably what we're going to end up doing. Plus, we have some new curb cuts we have to do, and new landscaping.

Ms. Dinaro: Can you also talk me through the landscaping for this site?

Mr. Jawvirya: I'm not 100% familiar with the landscaping architecture. I wasn't part of that planning, but I know that there's some existing and we're putting new.

Ms. Dinaro: Okay, that's it for now.

Mr. Wilshaw: Thank you. Ms. Dinaro, any other questions for our petitioner?

Mr. Droze: At the study session, we talked about the gate at kind of the front of the site, and I think verbally, we understood that that was going to be a wrought iron gate. I didn't see any details on the plan. But can you speak to confirm, just for the record, that that would be wrought iron?

Mr. Jawvirya: It will be a wrought iron structure. I don't know the exact details of how it's going to tie into the existing building or the new building, but it'll architecturally fit into what we're creating.

Mr. Droze: Okay? And I guess, are you planning any sort of pickets on top of that? Or would it be…

Mr. Jawvirya: No, I'm creating a kind of a modern architecture. So I would assume our fence is gonna or gate will end up looking pretty modern.

Mr. Droze: Okay, good. I just, if you can, I think you're committing to that. I think that would be something….

Mr. Jawvirya The way I see it, we're trying to represent the brand. And those bikes are pretty incredible in terms of detail, so we have to mirror that on the outside of the building. I think that's very important from my side.

Mr. Droze: Okay, great. I think I just wanted to make sure it wasn't like chain link, you know, just for the record.

Mr. Jawvirya: Well, I think that the German guys from Germany will show up and rip that out.

Mr. Droze: And I guess maybe, I guess picking up on the discussion a little bit about the LEDs, what is the plan for operation of those?

Mr. Jawvirya: So, those are all recess so you don't actually see them. They just kind of create a glow within the structure. They'll probably be on the same timer as the sign, I believe. It's just like a pure white. It's not like some crazy color show.

Mr. Droze: It would just be that,it wouldn't be changing.

Mr. Jawvirya: There's no change in color. It's more of like creating a halo effect to up light, and they're underneath the canopy, which will create lighting. We'll have some recessed lighting as well.

Mr. Wilshaw: Thank you, Mr. Droze. Any other questions for our petitioner?

Mr. Ventura: I just wanted to follow up and Mr. Droze's, comments with regard to the LED light. So, this is not going to be invisible. These lights are not going to be visible.

Mr. Jawvirya: No, it'd be…

Mr. Ventura: It'd be indirect lighting across…

Mr. Jawvirya: Correct, correct indirect it'll be tucked into like…

Mr. Ventura: It would be lightband lighting or anything?

Mr. Jawvirya: I'm sorry?

Mr. Ventura: It's not a light band?

Mr. Jawvirya: No, you won't see the diodes or anything like that. You just see the effect of glowing.

Mr. Ventura: It's indirect?

Mr. Jawvirya: Indirect.

Mr. Ventura: Thank you very much.

Mr. Wilshaw: Thank you, Mr. Ventura. Any other questions?

Mr. Caramagno: So back to the lighting…hate to hang up on this, but is that the same for the vertical white around the BMW sign as well?

Mr. Jawvirya: So, that'll be a kind of recessed in cove.

Mr. Caramagno: So, there's a slot…it fits into a slot, correct?

Mr. Jawvirya: Correct. And you won't see the actual diodes. You'll just…you'll see the glow of the material.

Mr. Caramagno: A little bit more on the size of the sign, because it sounds like it's going to have to go to ZBA, and it's going to be an issue. I was on the ZBA. This will be an issue for them. I'm sure of it. Why so big?

Mr. Jawvirya: So obviously, I'm trying to utilize some height, so he has visibility from the highway. That's part of the purpose. Part of the structure is to hold up the canopy. So, I think I'm kind of the monolith that I'm creating, there is supposed to be part of the structure of that canopy, because it sticks out of the building pretty far. You can kind of see it on the image. I don't know if you can zoom into the right image over here. Yeah, see how it kind of ties into the canopy. The canopy is held up by that.

Mr. Caramagno: So, you mean, tell me that canopy can't stand on its own without that huge sign?

Mr. Jawvirya: It could, but part of the design is for it to be like…tie that whole unit into the building.

Mr. Caramagno: I would think, yeah, you probably have to tie that thing and so it doesn't tip over. That's a big sign. That's a big sign. You know, it's…everybody around is gonna be looking at that sign saying, how did this get through? So, I hate to see it hold up the project, but I think it's large. Anyhow, that's all I've got.

Mr. Wilshaw: Thank you, Mr. Caramagno, any other questions for our petitioner? Nothing else from anyone. Anyone in the audience wishing to speak on this item. No one coming forward. Anything else that you'd like to tell us before we make our decision?

Mr. Jawvirya: No, just excited to get going on this. I think it's a good time for what's going on in motorcycles. To put this in this location. I think it'll help revive that existing site, because it's been dead for a very long time.

Mr. Wilshaw: Okay, very good. Well, thank you for your comments, and a motion will be in order this time. We'll see what happens. Thank you.

On a motion by Long, seconded by Ventura, and unanimously adopted, it was

#04-17-2025 ***RESOLVED***, That the Planning Commission does hereby recommend to the City Council that on Petition 2022-08-08-04 submitted by Future Land Holdings. L.L.C., under Sections 13.13 of the Livonia Zoning Ordinance, requesting to amend a previously approved site plan to repurpose and expand the former restaurant building at 19265 Victor Parkway to operate a BMW motorcycle dealership, located on the west side of Victor Parkway between Seven Mile Road and Pembroke Avenue in the Southeast ¼ of Section 6, be approved subject to the following conditions:

1. That the General Site Plan, identified as Sheet No. C-400, dated March 3, 2025, as revised, prepared by Priority Engineering, is hereby approved and shall be adhered to.

2. That the Grading Plan, identified as Sheet No. C-500, dated March 3, 2025, as revised, prepared by Priority Engineering, is hereby approved and shall be adhered to.

3. That the Elevations Plan, identified as Sheet No. ELEV2, dated December 3, 2024, as revised, prepared by JJV Design Group, is hereby approved and shall be adhered to.

4. That the access driveway and parking lot shall be repaired, resealed, and restriped as necessary to the satisfaction of the Inspection Department.

5. Parking spaces shall be doubled striped at ten feet (10') wide by twenty feet (20') in length.

6. That all exterior light fixtures shall not exceed twenty feet (20') in height and shall be aimed and shielded to minimize stray light trespassing across property lines and glaring into adjacent roadway.

7. That except for what may be authorized under the Zoning Ordinance as part of a temporary sales event, any type of exterior advertising related to the sale of the vehicles designed to attract the attention of passing motorists, such as promotional flags or streamers, shall be prohibited.

8. That there shall be no outdoor storage of vehicle parts, equipment, scrap material, waste petroleum products, junked, unlicensed or inoperable vehicles, or other similar items in connection with this operation, and the overhead doors, when not in use for vehicles entering or exiting the service facility, shall be closed at all times.

9. That only conforming signage is approved with this petition, and any additional signage shall be separately submitted for review and approval by the Zoning Board of Appeals.

10. That the LED lightband fixture shall be hidden and not visible; the light color shall remain white at all times as represented in rendering on Sheet No. ELEV1, dated December 3, 2024, as revised, prepared by JJV Design Group; and approved by the Planning and Inspection departments;

11. That the specific plans referenced in this approving resolution shall be submitted to the Inspection Department at the time the building permits are applied for; and,

12. Pursuant to Section 13.13 of the Livonia Vision 21 Zoning Ordinance, this approval is valid for a period of one year

only from the date of approval by City Council, and unless a building permit is obtained, this approval shall be null and void at the expiration of said period.

Mr. Wilshaw: Is there any discussion?

Mr. Wilshaw, Chairman, declared the motion is carried and the foregoing resolution adopted. It will go on to the City Council with an approving resolution.

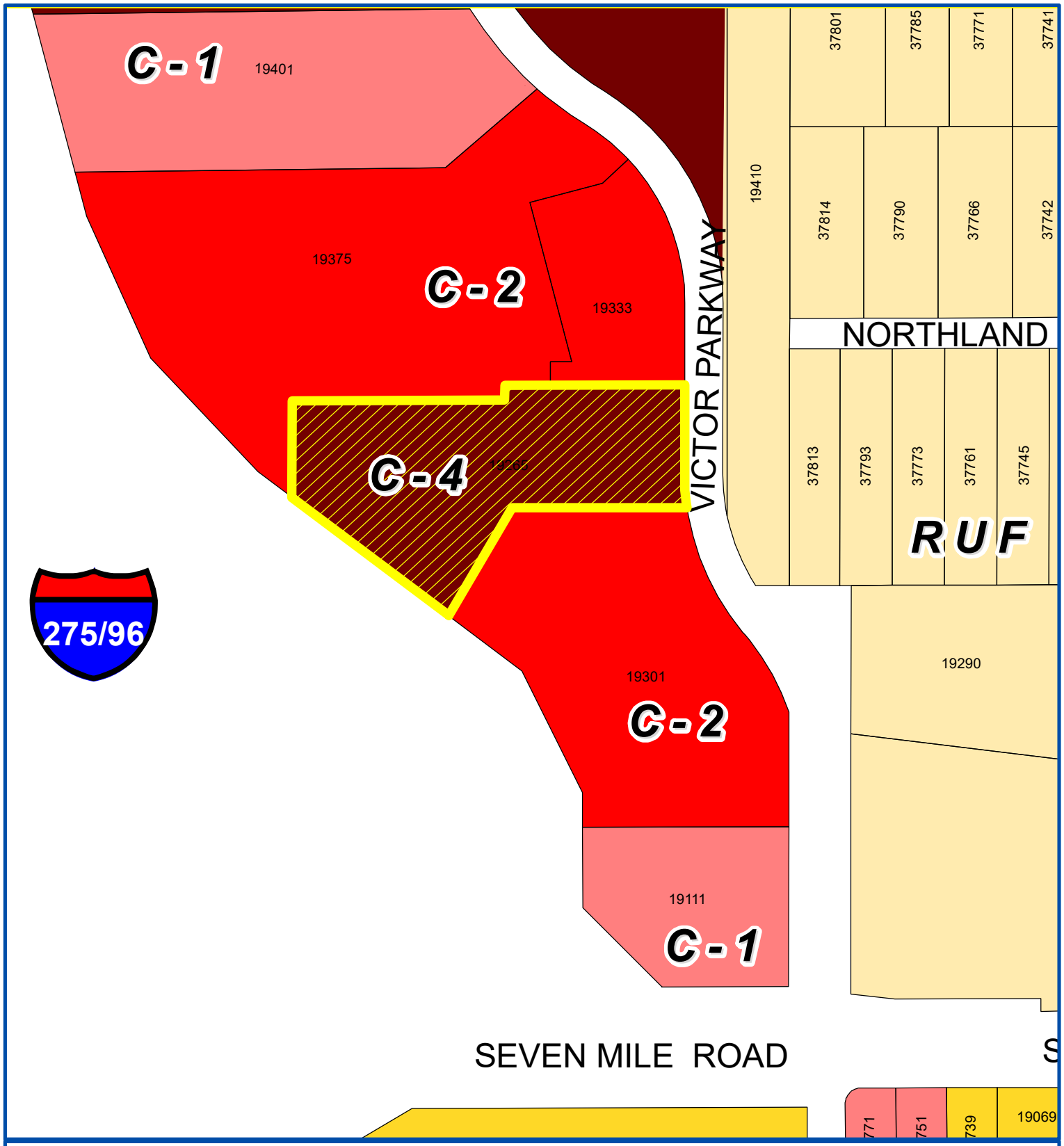

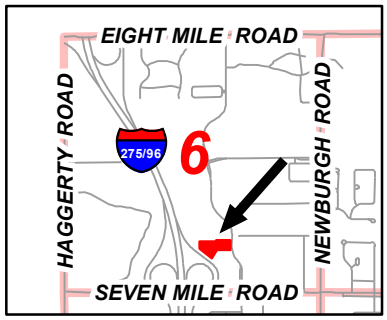

Address & Zoning Map

Petition 2022-08-08-04
BMW Motorcycle Dealership
19265 Victor Parkway
Amend waiver to re-develop the existing restaurant into BMW Dealership

N

Not to Scale

City of Livonia
Planning Department

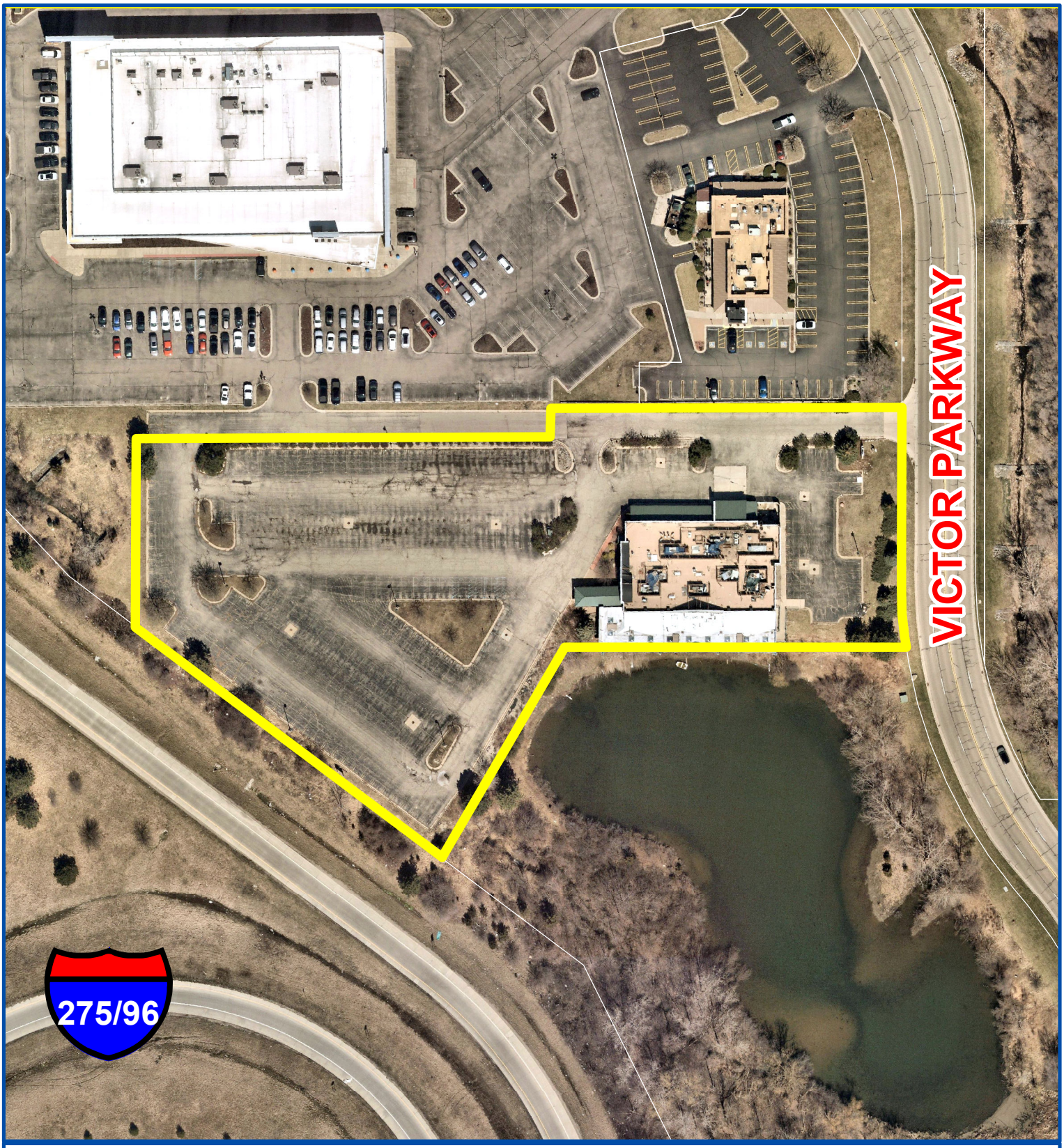

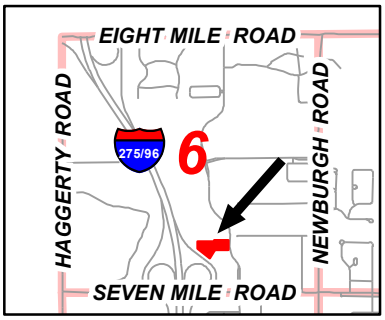

Aerial Map

Petition 2022-08-08-04
BMW Motorcycle Dealership
19265 Victor Parkway
Amend waiver to re-develop the existing restaurant into BMW Dealership

N

Not to Scale

City of Livonia
Planning Department

PLANNING COMMISSION STAFF NOTES

MISCELLANEOUS

ITEM 4

Petition 2022-08-08-04 submitted by Future Land Holdings. L.L.C., under Sections 13.13 of the Livonia Zoning Ordinance, requesting to amend a previously approved site plan to repurpose and expand the former restaurant building at 19265 Victor Parkway to operate a BMW motorcycle dealership, located on the west side of Victor Parkway between Seven Mile Road and Pembroke Avenue in the Southeast ¼ of Section 6.

April 22, 2025: Study Meeting:

This petition involves the redevelopment of the site of the former Doc's Sports Retreat, located on Victor Parkway. The plan is to repurpose the existing 14,382 square-foot restaurant and add a 3,590 square foot building addition for the purpose of operating a motorcycle dealership (BMW).

The irregular-shaped parcel, located approximately 800 feet north of Seven Mile Road, measures 3.21 acres with roughly 193 feet of frontage along Victor Parkway and 312 feet along the rear property line bordering the I-275/96 Expressway. The former restaurant is 14,382 square feet in size and the entire property is zoned C-4 (High Rise Commercial). Motorcycle sales, service, and repair establishments are included under the definition of retail sales and treated as a permitted use in the C-4 district.

In June of 2019, this site was rezoned from C-2 (General Business) to C-4-I, which allows for buildings up to a maximum height of six (6) stories in height. The rezoning was needed to facilitate the approval of a new six-story, dual-branded hotel (Aloft & Element) (CR #221-19). The hotel was never developed.

Lying immediately to the north of the subject property is the Los Amigos Don-Juan restaurant and Dave & Buster's Arcade and Bar, both zoned C-2. To the south is a pond used for detaining storm water for portions of Victor Corporate Park. To the east, across Victor Parkway, are residential homes that front on Northland Road. And abutting the site to the west is the I-275/96 Expressway.

Parking would be provided on the west, and east sides of the building. The existing drive approach on Victor Parkway would remain in its current location. Secondary access to the site would be available from the adjacent commercial parcel to the north via a cross-access agreement that has been in place for many years. It should also be pointed out that the existing parking lot along the frontage of Victor Parkway that would be preserved contains fifteen (15) parking spaces.

In a C-4 district, along the north and south sides of the property, the Ordinance allows for a zero-setback subject to applicable building and fire codes. The addition to the building complies with all required setback lines.

- Existing dumpster enclosure with gates to remain on the property.
- The petitioner is proposing a rolling gate to block entrance to the eastern parking lot.
- A new fire hydrant location is proposed to the northwest of the building.
- The existing ADA stalls shall be re-striped as needed to conform to minimum ADA widths and specifications.

For a motorcycle dealership, required off-street parking is based on the following: one (1) space for each 150 square feet of showroom floor area, plus one (1) space for each 500 square feet of service floor area. Floor plans show 7,150 square feet of showroom and 7,788 square feet of service floor area. Zoning ordinance standards require 64 parking spaces. The proposed parking lot consists of fifteen (15) spots along Victor Parkway and 193 existing spots in the vast parking lot behind the building. The parking minimum is satisfactory.

Stormwater from the site would be managed using the existing detention basin located adjacent to the site's southern property line. The petitioner will need to provide details of drainage and stormwater treatment to the Engineering Department before obtaining permits for the proposed redevelopment.

Pursuant to Section 10.03 of the zoning ordinance, no fewer than four (4) full size trees, two (2) ornamental trees, and thirty-five (35) shrubs are required along the site's Victor Parkway street frontage. The plan shows that the existing landscaping along Victor Parkway would remain as is. This area currently contains six (6) pine trees. Additionally, all off-street parking areas of forty (40) parking spaces or more must have internal landscaping with each interior landscape area, such as parking lot islands, containing at least one (1) tree. Each island would contain at least one (1) tree. Landscaped greenbelts would be created along the perimeter of the site to help screen the site from the adjacent properties and the expressway. These areas would be planted with a variety of plant materials including Honey Locust trees, Red Maple trees and Burning Bushes.

Renderings found on sheets ELEV1 and ELEV2 show that the design of the building's exterior will have a new façade complete with Black EIFS, corrugated aluminum panel, Black ACM aluminum, and the tall BMW column will be constructed with Black ACM aluminum panel.

For exterior site lighting, a photometric plan has not been submitted and no information is available regarding the location, illumination levels or height of the exterior light fixtures. All exterior light fixtures should be consistent with the guidelines of the City of Livonia Outdoor Lighting Policy for the installation of exterior lighting in all non-residential zoning districts, which specifies that pole mounted lights shall not exceed a height of twenty feet (20') above grade.

According to the provisions set forth in Article XI of the sign regulations, this building would be allowed one (1) wall sign not to exceed one (1) square foot for each lineal foot of the building frontage. The development would also be allowed one (1) ground sign, not to exceed thirty (30) square feet in area and six feet (6') in height and must be setback at least ten feet (10') from any right-of-way lines. The submitted Elevations Plan (Sheet No. A3) show a number of wall signs on the building. Any signage in excess of what is permitted by the sign ordinance would require a variance from the Zoning Board of Appeals.

April 29, 2025: Public Hearing:

Approving Resolution: That the request to develop BMW Motorrad motorcycle dealerships at 19265 Victor Parkway, is hereby approved, subject to City Council approval and the following conditions:

1. That the General Site Plan, identified as Sheet No. C-400, dated March 3, 2025, as revised, prepared by Priority Engineering, is hereby approved and shall be adhered to.

2. That the Grading Plan, identified as Sheet No. C-500, dated March 3, 2025, as revised, prepared by Priority Engineering, is hereby approved and shall be adhered to.

3. That the Elevations Plan, identified as Sheet No. ELEV2, dated December 3, 2024, as revised, prepared by JJV Design Group, is hereby approved and shall be adhered to.

4. Parking spaces shall be doubled striped at ten feet (10') wide by twenty feet (20') in length.

5. That all exterior light fixtures shall not exceed twenty feet (20') in height and shall be aimed and shielded to minimize stray light trespassing across property lines and glaring into adjacent roadway.

6. That except for what may be authorized under the Zoning Ordinance as part of a temporary sales event, any type of exterior advertising related to the sale of the vehicles designed to attract the attention of passing motorists, such as promotional flags or streamers, shall be prohibited.

7. That there shall be no outdoor storage of vehicle parts, equipment, scrap material, waste petroleum products, junked, unlicensed or inoperable vehicles, or other similar items in connection with this operation, and the overhead doors, when not in use for vehicles entering or exiting the service facility, shall be closed at all times.

8. That only conforming signage is approved with this petition, and any additional signage shall be separately submitted for review and approval by the Zoning Board of Appeals.

9. That no LED lightband or exposed neon shall be permitted on this site including, but not limited to, the building or around the windows.

10. That the specific plans referenced in this approving resolution shall be submitted to the Inspection Department at the time the building permits are applied for; and,

11. Pursuant to Section 13.13 of the Livonia Vision 21 Zoning Ordinance, this approval is valid for a period of one year only from the date of approval by City Council, and unless a building permit is obtained, this approval shall be null and void at the expiration of said period.

BMW Motorcycles South East Michigan

Construction Documents

19265 Victor Parkway

Livonia, Wayne Co., Michigan, 48152

CITY OF LIVONIA UTILITY CONTACT LIST:

Sanitary & Water - City of Livonia, DPW:
Ryan Ferrell
12973 Farmington Road
Livonia, MI 48150-4202
Phone: 734-466-2614
Email: RFerrell@livonia.gov

Fire - City of Livonia Fire Department
Robert Jennison
Fire Chief
14190 Farmington Road
Livonia, MI 48154
Phone: 734-466-2441
After 5:00 pm: 734-466-2470

Wayne County Traffic Signals:
Eric Lentz, P.E.
Traffic Operations Section
Division of Roads
29900 Goddard Road Detroit, MI 48242
Phone: 734-955-2161
Fax: 734-955-2338
Email Elentz@waynecounty.com

Wayne County DPS:
Hikmat Kassem, P.E.
Assistant Permit Engineer
33809 Michigan Avenue
Wayne, MI 48184
Phone: 734-595-6504, Ext. 2038
Fax: 734-595-6356
Buckeye Partners, L.P.:
Terrian Foley
9999 Hamilton Boulevard 5 Tek Park
Breinigsville, PN 18031
Phone: 610-904-4418
Emergency Phone: 800-331-4115

Sunoco Logistics:
Jason Adams - Pipeline Inspector
7155 Inkster Road
Taylor, MI 48180-1481
Phone: 313-969-9478
Mobile 313-319-9645

Midwest Fiber Network, LLC:
Matt Hebel
Vice President, Operations
6070 N. Flint Road
Glendale, WI 53209
Phone: 414-459-3575
Mobile: 414-349-3722
Email:
mhebel@midwestfibernetworks.com
Website: midwestfibernetworks.com

Telephone AT & T
Anthony Hoover
Metro South Engineering
17651 Michigan Avenue, Room 201
Dearborn, MI 48126
Phone: 313-240-5498
MDOT Taylor TSC:
Andrea L. Jones
Utility and Permit Technician
6510 Telegraph Road Taylor, MI 48180
Phone: 313-375-2402
Fax: 313-295-0822
Email jonesan@michigan.gov

CSX Transportation, Inc.:
Charlie Myers
500 Water Street, J180 Jacksonville, FL 32202
Phone: 904-633-1503
Fax: 904-306-5037
Email: charlie_myers@CSX.com
Emergency, 1-800-232-0144

Telephone - AT & T, (R.O.W. / Const. Concerns):
Marc Goodell
1700 Cicotte Avenue, Room 111
Lincoln Park, MI 48146
Phone: 313-405-0574
Email: mg6557@att.com

Amanda Griffith
Fiber Permits Manager
24700 Northwestern Hwy, Suite 700
Southfield, MI 48075
Phone: 248-228-8286
Email: Permits@123.net
Gas - Consumers Energy
Chris Schneider
11801 Farmington Road
Livonia, MI 48150
Phone: 734-513-6277
Fax: 734-513-6266
Emergency Phone: 800-477-5050
Email.
christopher.schneider@cmsenergy.com

Electric - DTE Energy
Tracie Duncan
Supervisor - Regional Planning
8001 Haggerty South Belleville, MI 48111
Phone: 734-394-8662
Email: tracie duncan@dteenergy.com

Anything Streetlight (other than outages)
Stephanie Sharlow
Phone: 734-397-4091

ITC - Local Government & Community Affairs:
ExteNet Systems, Inc.:
Erica Davis
27175 Energy Way Novi, MI 48377
Phone: 248-946-3688
Fax: 248-910-5148
Email: edavis@itctransco.com
Charter Communication (formerly Spectrum)
Eric Lewis
14525 Farmington Road Livonia, MI 48154
Phone: 248-413-9136
Email: eric.lewis1@charter.com

TURNKEY Network Solutions:
Erica Bennett
Permit Coordinator
7020 Southbelt Drive SE Caledonia, MI 49316
Phone: 616-455-9840
Fax: 616-455-9845

Fibertech Networks, LLC:
Earl Knab - Project Manager
Renee Guider - Permits & Application
300 Meridian Centre
Rochester, NY 14618
Phone: 585-202-1846
Phone: 585-697-5193
Email: Earl Knabeknab@fibertech.com
Renee Guider-rguider@fibertech.com

MeLeodUSA, a Windstream Company:
Dirk Welte
4074 S. Linden Flint, MI 48507
Phone: 810-691-1035
Email: dirk.welte@windstream.com
Fax: 734-237-4608
3030 Warrensville Road, Suite 340
Lisle, IL 60532
Phone: 630-505-3800
Fax: 630-505-1332
David Schneider
152 Dansin
Milford Township, MI 48381
Phone: 734-536-3081
Email: dschneider@extenetsystems.com

Verizon Wireless
David Haslinger
24242 Northwestern Highway
Southfield, MI 48075
Phone: 248-672-9698
Email:
david.haslinger@verizonwireless.com

Windstream Communications, LLC.
Autry L. Meeker - Sr. Analyst
OSP Engineering 1110I Anderson Drive
Little Rock, AR 72212
Phone: 501-748-5234
Email: Autry.meeker@windstream.com
Dale Kirk - VP of Engineering
41112 Concept Drive
Plymouth, MI 48170
Phone: 248-233-6811
Fax: 248-233-4875
Email: Dale_kirk@cable.comcast.com

Wow! Internet and Cable:
Bruce Roach - Field Contact
32650 N. Avis Dr.
Madison Heights, MI 48071
Phone: 586-453-3553
Fax: 248-677-9021
Email: Bruce.Roach@wowinc.com

Wow! Internet and Cable:
John Hajec-Construction Engineer
37150 Plymouth Road Livonia, MI 48150
Phone: 734-237-4319
Fax: 734-237-4608
Email: j_hajec30@wideopenwest.com
Comcast Business Communications, LLC

UTILITY WARNING!!
THE LOCATIONS AND ELEVATIONS OF EXISTING UNDERGROUND UTILITIES AS SHOWN ON THIS DRAWING ARE ONLY APPROXIMATE. NO GUARANTEE IS EITHER EXPRESSED OR IMPLIED AS TO THE COMPLETENESS OR ACCURACY THEREOF. THE CONTRACTOR SHALL BE EXCLUSIVELY RESPONSIBLE FOR DETERMINING THE EXACT UTILITY LOCATIONS AND ELEVATIONS PRIOR TO THE START OF CONSTRUCTION.

811 Know what's below. Call before you dig.

LEGAL DESCRIPTION:

Premises situated in the City of Livonia, County of Wayne, State of Michigan: Part of the Southeast 1/4 of Section 6, Town 1 South, Range 9 East, City of Livonia, Wayne County, Michigan, described as commencing at the South 1/4 corner of said Section 6 and proceeding along the South Section line North 88 degrees 03 minutes 03 seconds East 791.00 feet, thence North 01 degree 56 minutes 57 seconds West 100.00 feet to the East right of way line of 1-275 and the North right of way line of Seven Mile Road; thence along the East right of way line of 1-275, the following four (4) courses, (1) North 46 degrees 56 minutes 57 seconds West 176.78 feet, (2) North 01 degree 56 minutes 57 seconds West 182.04 feet; (3) North 28 degrees 18 minutes 53 seconds West 214.08 feet; (4) North 54 degrees 41 minutes 00 seconds West 141.93 feet to the point of beginning, continuing along the East right of way of 1-275 North 54degrees 41 minutes 00 seconds West 312.16 feet; thence North 01 degree 41 min utes 47 seconds West 151.91 feet; thence North 88 degrees 03 minutes 03 seconds East 334.11 feet; thence North 01 degree 56 minutes 57 seconds West 24.00 feet; thence North 88 degrees 03 minutes 03 seconds East 285.00 feet to the West right of way line of Victor Parkway, thence along the said West right of way South 01 degrees 41 minute 47 seconds East 139.00 feet, thence continuing along the said West right of way 55.59 feet along the arc of a curve to the left, having a radius of 390.00 feet passing through a central angle of 8 degrees 10 minutes with a long chord bearing of South 05 degrees 46 minutes 47 seconds East 55.54 feet; thence South 88 degrees 03 minutes 03 seconds West 276.00 feet; thence South 28 degrees 03 minutes 03 seconds West 196.89 feet to the point of beginning.

Property Address: 19265 Victor Parkway Livonia, MI 48152
Parcel ID: 024990003009
Zoning: C-4, General Business

Provided by Surveyor, Nowak & Fraus

OVERALL SITE PLAN

NOT TO SCALE

COUNTY MAP

NOT TO SCALE

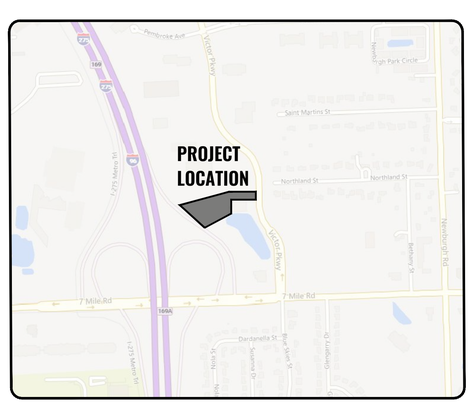

SITE LOCATION MAP

NOT TO SCALE

OWNER

Future Land Holdings LLC
4069 Lakewood Dr. Waterford, MI 49329
Contact: Mr. Charles Knoll
Ph: (248) 719-4200
Email: CKnoll@bmwincsem.com

Landscape Architect

Dul Landscape Architecture
212 Daines Street
Birmingham, MI 48009
Contact: Andrew J Moiseev, RA
Ph: O: (734) 320-1313 C: (734) 320-1313
Email: tshoemaker@duldesign.com

Developer

JJV Design Group
1565 Kirkway Rd Bloomfield, MI 48302
Contact: John Janviriya
Ph: (248) 724-8226
Email: johnjanviriya@yahoo.com

Civil Engineer

Priority Engineering, LLC
1420 Washington Blvd. Ste 301
Detroit, Michigan 48226
Contact: Teon Sujak, PE
Ph: (248) 885-8431
sujak@priority-eng.com

Project No. 25-0018

Surveyor

Nowak & Fraus Engineers
46777 Woodward Ave Pontiac, MI 48342-5032
Contact: Mr. George Ostrowski, LLA, LEED AP
Tel: (248) 332-7931
Fax: (248) 332-8257

Architect

JJV Design Group
1565 Kirkway Rd Bloomfield, MI 48302
Contact: John Janviriya
Ph: (248) 724-8226
Email: johnjanviriya@yahoo.com

DRAWING INDEX:

SHEET No.	*SHEET TITLE*
C-100	Cover Sheet
C-101	General Project Notes
C-200	Existing Site Conditions Plan
C-300	Removal/Demolition & SWPPP Plan
C-400	Site Plan
C-500	Paving & Grading Plan
1 of 3	Residential Concrete Pavement
2 of 3	Residential Concrete Pavement
3 of 3	Residential Concrete Pavement
1 of 2	Storm Sewer Manhole Standard Details
2 of 2	Storm Sewer Manhole Standard Details
1 of 2	Sanitary Sewer Standard Details
2 of 2	Sanitary Sewer Standard Details
1 of 2	Water Main Standard Details
2 of 2	Water Main Standard Details
1 of 1	Soil Erosion & Sedimentation Control Standard Details
L1	Landscape Plan
L2	Landscape Details

CITY OF LAVONIA STANDARD CONSTRUCTION NOTES:

1. All work and materials shall be in accordance with the current specifications and standard details of the city of Livonia.
2. Notify the city of Livonia engineering division (734) 466-2571 a minimum of 48 hours prior to the start of construction.
3. Call miss dig (1-800-647-7344/1-800-miss dig) a minimum of 72 hours prior to the start of construction.
4. All work in the Plymouth road right-of-way shall meet the requirements of and be approved by M.D.O.T.
5. The contractor shall be responsible for any and all damages to existing underground utilities caused by the contractor's operations.
6. Trenches under or within 3 ft. of existing or proposed pavements, driveways, and/or sidewalks shall be backfilled and compacted with M.D.O.T. class II sand.
7. Where utilities cross, provide porous backfill tamped in 12" layers to the underside of the higher utility. a 6" minimum sand cushion shall be provided between utilities.
8. All sewer construction shall have M.D.O.T class II bedding unless otherwise specified on the profiles.
9. All elevations shown are based on U.S.G.S. DATUM.
10. All disturbed areas behind the curb within the victor parkway right-of-way shall be restored by placing 3" of top soil and sodding in accordance with city of Livonia standards 11. all driveways, drain tiles, culverts and other facilities removed, destroyed, damaged or otherwise disturbed by the work shall be replaced and/or restored to their original condition by the contractor.
12. All soil erosion and sedimentation must be controlled and contained on site.
13. The contractor must maintain all traffic at all times as required by the current Michigan manual of uniform traffic control devices (MMUTCD), Wayne county, and/or Michigan department of transportation (MDOT).
14. The contractor shall at all times provide emergency access to all properties for police, fire department, ambulances and/or other emergency vehicles to protect life, health and property.
15. Paved streets and driveways must be maintained in a reasonable state of cleanliness and the contractor shall remove accumulations of debris caused by construction operations.
16. The contractor shall have an operating sweeper broom and clean the pavement at the close of each days operation and as often as necessary. Failure to comply shall be cause to stop construction. contractor shall comply with the state air pollution control regulations and city of Livonia soil erosion and sedimentation control (SESC). .
17. Contractor must provide all necessary sheeting, shoring, dewatering, bracing, trench boxes, etc. to perform work safely, protect existing utilities and improvements in accordance to Michigan occupational safety and health administration (MIOSHA).

PERMITS REQUIRED FOR PROJECT

PERMIT	CITY/AGENCY	APPROVAL
R.O.W.		
BUILDING		

PROJECT DESCRIPTION:

PROJECT SCOPE TO INCLUDE REMOVAL OF EXISTING VEGETATION/INFRASTRUCTURE AS NECESSARY TO CONSTRUCT A NEW ADDITION TO THE EXISTING BUILDING AND ASSOCIATED INFRASTRUCTURE SUCH AS CONCRETE PAVEMENT, CONCRETE CURB AND GUTTER, PARKING FACILITIES, UTILITIES, STORM MANAGEMENT SYSTEM, LANDSCAPING, LIGHTING, SITE SIGNAGE AND OTHER IMPROVEMENTS TO SERVICE THE SITE.

FLOODPLAIN NOTE:

THE SUBJECT PROPERTY LIES IN FLOOD ZONE "X", ACCORDING TO FLOOD INSURANCE RATE MAP, MAP NO. 26163C0045E FOR WAYNE COUNTY, MICHIGAN, DATED FEBRUARY 2, 2012 AND ISSUED BY THE FEDERAL EMERGENCY MANAGEMENT AGENCY. LINES SHOWN HAVE BEEN DIGITALLY TRANSLATED FROM DFIRM DATABASE INFORMATION SUPPLIED BY THE FEMA MAP SERVICE CENTER HTTPS://MSC.FEMA.GOV).

PRIORITY ENGINEERING, LLC

Engineer's Seal

STATE OF MICHIGAN
TEON C SUJAK
License No. 6201046896
LICENSED PROFESSIONAL ENGINEER

Certification

North | SCALE

Project
BMW Motorcycles
South East Michigan

Project Location
19265 Victor Parkway
Livonia, Wayne Co.,
Michigan, 48152

Sheet Name
COVER SHEET

Revisions

REV	ISSUED FOR	ISSUE DATE	BY

Date:	03/03/2025
Reviewed By:	BAH
ENG/CADD:	JGR
Checked By:	TCS
PE Project No.	25-0018
Sheet No.	C-100

DRAWING NOTE: SCALE SHOWN IS MEANT FOR 24" X 36" AND WILL SCALE INCORRECTLY IF PRINTED ON ANY OTHER SIZE MEDIA BESIDES 17" X 11"

NO REPRODUCTION SHALL BE MADE WITHOUT PRIOR CONSENT OF PRIORITY ENGINEERING, LLC.
© 2025

GENERAL NOTES

- MATERIAL AND CONSTRUCTION METHODS SHALL FOLLOW THE PRACTICE DEFINED BY THE LATEST EDITION OF THE MICHIGAN DEPARTMENT OF TRANSPORTATION "STANDARD SPECIFICATIONS FOR CONSTRUCTION" AND APPLICABLE SPECIAL PROVISIONS UNLESS OTHERWISE MODIFIED HEREWITHIN OR IN THE PROJECT SPECIFICATIONS.
- THE LOCATION OF ALL UTILITIES SHOWN ON THESE PLANS IS TAKEN FROM AVAILABLE DATA. OWNER WILL NOT BE RESPONSIBLE FOR ANY OMISSION OR VARIATIONS FROM THE LOCATIONS SHOWN. PURSUANT TO ACT 174 OF THE PA OF 2013 AS A CONDITION OF THIS CONTRACT NOTICE SHALL BE GIVEN TO MISS DIG PRIOR TO UNDERGROUND WORK TO BE PERFORMED IN ACCORDANCE WITH THIS CONTRACT. CALL 811.
- FOR PRIVATE UTILITIES, CONTRACTOR SHALL RETAIN THE SERVICES OF A PRIVATE UTILITY LOCATOR TO LOCATE ALL PRIVATE UTILITIES OWNED BY OWNER.
- CONTRACTOR SHALL NOTIFY OWNER'S REPRESENTATIVE A MINIMUM OF 72 HOURS PRIOR TO BEGINNING CONSTRUCTION ACTIVITIES OR DISRUPTION OF ANY UTILITY.
- THE CONTRACTOR SHALL LOCATE ALL ACTIVE UNDERGROUND UTILITIES PRIOR TO STARTING WORK AND SHALL CONDUCT HIS OPERATIONS IN SUCH A MANNER AS TO ENSURE THAT THOSE UTILITIES NOT REQUIRING RELOCATION WILL NOT BE DISTURBED. CONTRACTOR SHALL BE RESPONSIBLE TO REPAIR UTILITIES DAMAGED DURING CONSTRUCTION. SPRINKLER SYSTEMS SHALL BE REPAIRED BY CONTRACTOR AT NO COST TO OWNER.
- THE CONTRACTOR SHALL CONDUCT HIS OPERATIONS IN SUCH A MANNER TO COMPLY WITH ALL FEDERAL, STATE, AND LOCAL CODES FOR NOISE LEVELS, VIBRATIONS, OR ANY OTHER RESTRICTIONS WHILE REMOVING PAVEMENT OR FOR ANY OTHER CONSTRUCTION OPERATIONS WITHIN THIS CONTRACT TO BE INCLUDED IN THE RESPECTIVE ITEM OF WORK.
- CONTRACTOR AGREES TO ASSUME SOLE AND COMPLETE RESPONSIBILITY FOR JOB SITE CONDITIONS DURING THE COURSE OF CONSTRUCTION OF THIS PROJECT, INCLUDING SAFETY OF ALL PERSONS AND PROTECTION OF PROPERTY.
- THE CONTRACTOR SHALL DESIGN, CONSTRUCT, AND MAINTAIN ALL SAFETY DEVICES, AND SHALL BE SOLELY RESPONSIBLE FOR CONFORMING TO ALL LOCAL, STATE, AND FEDERAL SAFETY AND HEALTH STANDARDS, LAWS, AND REGULATIONS. ALL TRAFFIC CONTROL ACTIVITIES SHALL BE PERFORMED IN ACCORDANCE WITH THE LATEST VERSION OF THE MICHIGAN MANUAL OF UNIFORM TRAFFIC CONTROL DEVICES AND SHALL SUBMIT ALL REQUESTS TO OWNER'S REPRESENTATIVE AT LEAST SEVENTY-TWO (72) HOURS PRIOR TO THE ANTICIPATED NEED TO CLOSE AREAS.
- CONTRACTOR IS RESPONSIBLE FOR OBTAINING ANY NECESSARY PERMITS AND CONFORMING TO ALL APPLICABLE PERMIT REQUIREMENTS.
- CONTRACTOR SHALL SUBMIT ALL MATERIAL SUBMITTALS REQUIRED BY THE PROJECT SPECIFICATIONS INCLUDING ASPHALT CONCRETE AND PORTLAND CEMENT CONCRETE MIX DESIGNS TO ENGINEER A MINIMUM OF 14 DAYS PRIOR TO BEGINNING FIELD WORK.
- CONTRACTOR IS RESPONSIBLE FOR LAYOUT AND FIELD VERIFICATION. ADJUST CATCHBASINS AS REQUIRED. CONTRACTOR IS RESPONSIBLE FOR PROVIDING POSITIVE DRAINAGE. DRAINAGE ISSUES SHALL BE BROUGHT TO THE ATTENTION OF PRIORITY ENGINEERING PRIOR TO PLACEMENT OF ANY PAVEMENT STRUCTURE LAYERS. AREAS OF PONDING WATER SHALL BE REPAIRED BY FULL DEPTH PATCHING AT NO ADDITIONAL COST TO OWNER. CONTRACTOR SHALL PERFORM WALKTHROUGH WITH OWNER AND PRIORITY ENGINEERING BEFORE PLACEMENT OF ASPHALT CONCRETE LEVELING COURSE TO REVIEW PROPOSED GRADES.
- OBJECTS DESIGNATED TO REMAIN INCLUDING SIDEWALKS, PAVEMENT, CURB, LIGHT POLES, TRAFFIC SIGNS, LANDSCAPE AREAS, ETC. SHALL BE PROTECTED. IF DAMAGED BY THE CONTRACTOR, IT SHALL BE REPAIRED TO OWNER SATISFACTION AT NO ADDITIONAL COST TO THE OWNER.
- UPON COMPLETION OF EACH DAY OF WORK, THE CONTRACTOR SHALL BE RESPONSIBLE FOR LEAVING THE WORK AREA FREE OF HAZARDS AND SHALL PROVIDE ALL NECESSARY TEMPORARY SIGNS, WARNING DEVICES, AND BARRICADES.
- THE CONTRACTOR SHALL HAVE AN APPROVED SET OF FINAL PLANS MARKED ``ISSUED FOR CONSTRUCTION" ON THE JOB SITE AT ALL TIMES.THE CONTRACTOR SHALL KEEP ACCURATE AND LEGIBLE RECORDS OF ALL CHANGES OF WORK THAT OCCUR DURING CONSTRUCTION AND INFORMATION ON ``AS-BUILT" CONDITIONS. DOCUMENTATION OF CHANGES AND AS-BUILT INFORMATION SHALL BE RECORDED ON AN APPROVED SET OF FINAL PROJECT PLANS AND DELIVERED TO PRIORITY ENGINEERING AFTER COMPLETION OF WORK.
- THE CONTRACTOR SHALL TAKE THE NECESSARY STEPS TO PROTECT THE PROJECT AND ADJACENT PROPERTY FROM ANY EROSION AND SILTING THAT

SURVEY NOTE

- THE SITE PLANS WERE DEVELOPED BASED ON DRAWINGS PROVIDED BY THE OWNER AND A TOPOGRAPHICAL SURVEY BY PRIORITY ENGINEERING. THE CONTRACTOR IS RESPONSIBLE FOR VERIFYING LOCATIONS OF EXISTING STRUCTURES AND VERIFYING QUANTITIES. THE CONTRACTOR IS RESPONSIBLE FOR FINAL LAYOUT AND PROVIDING POSITIVE DRAINAGE.

EARTHWORK NOTES

- ALL NATURAL SOIL LEFT IN PLACE, IN CUT SECTIONS, SHALL BE COMPACTED TO NOT LESS THAN 95 PERCENT OF MAXIMUM DRY DENSITY OF THE MATERIAL AS DETERMINED BY THE MODIFIED PROCTOR TO A MINIMUM DEPTH OF 12 INCHES, UNLESS SHOWN OTHERWISE IN PLAN SET.
- THE LIMIT OF EARTH DISTURBANCE SHALL BE THE SLOPE STAKE LINE UNLESS OTHERWISE DIRECTED BY THE ENGINEER.
- ALL SLOPES SHALL BE CLASS A SLOPES.
- AREAS DISTURBED BY THE CONTRACTOR OR SUBCONTRACTOR SHALL BE RESTORED AS SPECIFIED IN THE SOIL EROSION AND SEDIMENTATION CONTROL PLAN, RESTORATION PLAN OR DIRECTED BY THE ENGINEER. NO ADDITIONAL PAYMENT OR COMPENSATION WILL BE ALLOWED FOR AREAS DISTURBED OUTSIDE THE SLOPE STAKE LINE.
- THE CONTRACTOR SHALL BE RESPONSIBLE FOR ANY DAMAGE TO THE PROPERTY BEYOND THE GRADING LIMITS, INCLUDING EXISTING FENCING, LAWN, TREES, SHRUBBERY, AND SIDEWALKS.

EARTH EXCAVATION NOTES

- IT SHALL BE THE CONTRACTOR'S RESPONSIBILITY TO PROVIDE TEMPORARY STORAGE AREAS FOR EXCAVATED MATERIAL WHICH MAY BE USED AS EMBANKMENT MATERIAL IN OTHER AREAS IF IT IS SUITABLE MATERIAL AS DETERMINED BY THE ENGINEER, ANY EXTRA HANDLING OF EXCAVATED MATERIAL IS CONSIDERED INCLUDED IN THESE PAY ITEMS.
- EXCAVATION DROP-OFFS GREATER THAN 8 INCHES SHALL BE PROTECTED BY 4 FT TALL ORANGE PLASTIC SAFETY FENCE (SNOW FENCE) SECURELY ATTACHED TO GROUND DRIVEN STAKES WHEN LEFT OVERNIGHT. SAFETY FENCING SHALL BE MAINTAINED UNTIL AREA IS WITHIN 8 INCHES OF ADJACENT GRADE. PAYMENT FOR THIS WORK IS INCLUDED IN TRAFFIC CONTROL LUMP SUM UNIT PRICE.

SOIL BORING NOTES

- THE SOIL BORINGS LOGS DEPICT POINT LOCATIONS AND DO NOT INFER THAT THE SURFACE CONDITIONS ARE THE SAME IN OTHER AREAS. BORING LOCATIONS ARE SHOWN ON THE PLANS, SOIL BORING LOGS ARE AVAILABLE UPON REQUESTOR INCLUDED WITH THE SPECIFICATIONS.

SITE GRADING NOTES

RESULT FR[illegible] THE CONTRACTOR SHALL BE OWNER. RESPONSIBLE FOR PROVIDING POSITIVE DRAINAGE WITH MIN. SLOPE OF 1.5%. LONGITUDINAL SLOPE ALONG GUTTER LINES SHALL BE 0.5% MIN.

- PRIOR TO INSTALLING ANY PAVEMENT LAYERS, THE CONTRACTOR SHALL REVIEW THE PROPOSED SITE GRADES WITH THE ENGINEER TO IDENTIFY AND RECTIFY ANY COMPLICATIONS.
- PROPOSED SIDEWALKS SHALL HAVE MIN. 1.0% AND MAX. 2.0% CROSS SLOPE.
- CONTRACTOR SHALL ADJUST ALL UTILITY RIMS LOCATED WITHIN THE WORK LIMITS AS NECESSARY TO BE FLUSH WITH THE PROPOSED FINISHED SURFACE. THIS INCLUDES ALL STORM MANHOLES, CATCH BASINS, CLEANOUTS, SANITARY MANHOLES AND CLEANOUTS, WATER MAIN MANHOLES, GATE VALVES, AND BOXES OR ANY OTHER UTILITY RIMS OR BOXES.
- WHERE PROPOSED PAVEMENT ABUTS EXISTING PAVEMENT DESIGNATED TO REMAIN, MATCH ELEVATIONS UNLESS INDICATED OTHERWISE ON THE PLANS.
- ADJUST GUTTER PAN FROM SPILL IN TO SPILL OUT AS REQUIRED TO ACHIEVE POSITIVE DRAINAGE.
- ADJUST ELEVATION OF CURB REPAIRS AS REQUIRED TO ACHIEVE POSITIVE DRAINAGE.
- TAPER CURB HEIGHT TO 0" IN 10' WHEN ABUTTING TO EX. PAVEMENT WITHOUT CURB.

GENERAL PAVING NOTES

- NEW PAVEMENT SHALL BE OF THE TYPE, THICKNESS AND CROSS-SECTION INDICATED ON THE PLANS.
- MATCH EXISTING ELEVATIONS WHERE NEW PAVEMENT ABUTS EXISTING PAVEMENTS OR OTHER FIXED OBJECTS.
- CONTRACTOR SHALL MATCH EXISTING STRIPING PATTERNS UNLESS OTHERWISE SHOWN ON THE PLANS. CONTRACTOR SHALL DOCUMENT EXISTING STRIPING PATTERN PRIOR TO REMOVAL OF ANY PAVEMENT.
- CONTRACTOR IS RESPONSIBLE FOR LAYOUT TO PROVIDE POSITIVE SITE DRAINAGE. WATER PONDING AND BIRD BATHS SHALL BE CORRECTED AS DIRECTED BY THE ENGINNER AT NO ADDITIONAL COST TO THE OWNER.
- NEW AGGREGATE BASE REQUIRED SHALL BE MDOT 21AA CRUSHED LIMESTONE MATERIAL.
- SUBGRADE SOIL FOUND TO BE UNSUITABLE SHALL BE RECONDITIONED OR REPLACED AS DIRECTED BY THE ENGINEER, INCLUDING THE NECESSARY FINE GRADING TO ENSURE THAT MINIMUM SPECIFIED PAVEMENT THICKNESS IS ACHIEVED.

TRAFFIC CONTROL NOTES

- OBTAIN WRITTEN PERMISSION FROM OWNER'S REPRESENTATIVE WHEN ROADS, SIDEWALKS AND PARKING LOTS NEED TO BE CLOSED PRIOR TO CLOSING ANY PAVED AREA.
- SUBMIT ALL REQUESTS TO OWNER'S REPRESENTATIVE AT LEAST SEVENTY-TWO (72) HOURS PRIOR TO THE ANTICIPATED NEED TO CLOSE ANY PAVED AREA.
- PROVIDE ALTERNATE TRAFFIC ROUTES AROUND CLOSED OR OBSTRUCTED TRAFFIC ROUTES AS NECESSARY OR REQUIRED BY OWNER'S REPRESENTATIVE.
- THE CONTRACTOR IS RESPONSIBLE FOR FURNISHING, PLACING AND MAINTAINING ALL TRAFFIC CONTROL DEVICES ACCORDING TO THE LATEST EDITION OF THE "MICHIGAN MANUAL OF UNIFORM TRAFFIC CONTROL DEVICES."

DEMOLITION/REMOVAL NOTES

- SAWCUT FULL DEPTH THE PAVEMENT, SIDEWALK AND CURB DESIGNATED TO BE REMOVED AT THE LIMITS OF WORK SHOWN ON THE PLANS OR MARKED IN THE FIELD.
- REMOVE ONLY THE STRUCTURES AND PAVEMENTS WITHIN THE LIMITS OF WORK AS DETAILED ON THE PLANS AND CROSS SECTIONS. ALL OTHER STRUCTURES AND PAVEMENT SHALL BE PROTECTED AS REQUIRED.
- ALL EXISTING UNDERGROUND UTILITIES WITHIN THE AREA OF WORK SHALL REMAIN AND BE PROTECTED DURING CONSTRUCTION, UNLESS, OTHERWISE DESIGNATED TO BE REMOVED. CONTRACTOR SHALL VERIFY EXACT LOCATION AND DEPTHS OF ALL EXISTING UTILITIES PRIOR TO COMMENCEMENT OF DEMOLITION OPERATIONS.
- CONTRACTOR SHALL DISPOSE OF ALL CONCRETE , ASPHALT, AGGREGATE BASE AND SUBGRADE SPOILS AT LEGAL DISPOSAL SITE. CONTRACTOR SHALL PAY FOR ALL TRUCKING AND DISPOSAL COSTS.
- MATERIAL AND SITE FEATURES HAVING SALVAGE VALUE SHALL BECOME THE PROPERTY OF THE OWNER UNLESS SPECIFIED OTHERWISE. ALL OTHER MATERIAL AND DEBRIS ACCUMULATED AS A RESULT OF DEMOLITION/REMOVAL/REPAIR ACTIVITIES SHALL BECOME THE PROPERTY OF THE CONTRACTOR AND DISPOSED OF IN A LEGAL MANNER.
- EXISTING WIRING AND ELECTRICAL OUTLETS SHALL BE CONSIDERED INCIDENTAL TO ELECTRICAL FEATURE DEMOLITION/REMOVAL.

CURB REPAIR NOTES

- SAWCUT THE CURB AREAS DESIGNATED FOR REPAIR AT THE LIMITS MARKED IN THE FIELD BY OWNER'S REPRESENTATIVE.
- REMOVE EXISTING CONCRETE WITHOUT CAUSING DAMAGE OR SPALLING TO ADJACENT SIDEWALK OR CURBS WHICH ARE DESIGNATED TO REMAIN. DAMAGED AREAS SHALL BE REMOVED AND REPLACED TO THE SATISFACTION OF THE OWNER AT NO ADDITIONAL COST.
- DRILL AND EPOXY GROUT TWO (2) #5 (18 INCH LONG EPOXY COATED) DEFORMED BARS A MINIMUM OF 6 INCHES INTO EXISTING CONCRETE CURBS (TWO FACES) WHICH ARE DESIGNATED TO REMAIN.
- MATCH EXISTING CURB GEOMETRY.
- PLACE AND CONSOLIDATE CONCRETE IN THE REPAIR AREA TO MATCH THE ELEVATION OF ADJACENT CURB AND SIDEWALK AREAS TO MAINTAIN POSITIVE DRAINAGE. FINISH CURBS TO MATCH FINISH OF ADJACENT AREAS WHICH ARE DESIGNATED TO REMAIN.
- VOID/HOLES (HONEYCOMB AREAS) ON THE CURB BACK/FACE SHALL BE REPAIRED WITH CEMENT MORTAR PASTE TO THE SATISFACTION OF THE OWNER.

CLEANUP AND RESTORATION NOTES

- PROTECT ADJACENT AREAS OUTSIDE OF PROJECT LIMITS DURING CONSTRUCTION. RESTORE ALL DISTURBED AREAS TO MATCH EXISTING CONDITIONS UNLESS OTHERWISE NOTED ON THE PROJECT PLANS. RESTORE GRASS AREAS WITH MINIMUM 4" OF TOPSOIL AND SOD UNLESS OTHERWISE NOTED ON THE PLANS. HYDRO SEED MAY BE USED WITH ENGINEERS APPROVAL. INSTALL SLOPE RESTORATION TYPE AS INDICATED ON PLAN.
- UPON COMPLETION OF WORK, THE ENTIRE SITE SHALL BE CLEARED OF EQUIPMENT, UNUSED MATERIALS, AND RUBBISH AND ANY DISTURBED AREAS RESTORED TO THE SATISFACTION OF THE OWNER.
- FINAL PAYMENT WILL NOT BE MADE UNTIL THE SITE IS CLEARED, RESTORED AND CLEANED PER THE PROJECT SPECIFICATIONS.

ABBREVIATIONS USED IN DRAWINGS

THE FOLLOWING ABBREVIATIONS ARE USED ON THESE PLANS:

@	AT (RATE OF)
&	AND
"	INCH
'	FOOT
#	NUMBER
AC PAVEMENT	ASPHALT CONCRETE = ASPHALT PAVEMENT/HOT MIX ASPHALT
ADA	AMERICANS WITH DISABILITIES ACT (BARRIER FREE ACCESS)
AGG	AGGREGATE BASE
ALT	ALTERNATE
APPROX.	APPROXIMATE/APPROXIMATELY
ARCH.	ARCHITECT
ASTM	AMERICAN SOCIETY FOR TESTING AND MATERIALS
AVG	AVERAGE
B	BORING
BDY	BOUNDARY
BIT	BITUMINOUS
BF	BARRIER FREE
BFF	BANK FULL FLOOD
BLDG	BUILDING
BM	BENCHMARK
BOL	BOLLARD
BOT	BOTTOM
BRG	BEARING
BSMT	BASEMENT
BOW	BOTTOM OF WALL
C	CORE
CAP	CAPACITY
CB	CATCH BASIN
CENTL.	CENTERLINE
CF	CUBIC FEET
CHANN.	CHANNEL
CJ	CONTROL JOINT
CLS	CRUSHED LIMESTONE
CL	CENTERLINE
CMP	CORRUGATED METAL PIPE
CMU	CONCRETE MASONRY UNIT
CO	CLEAN OUT
COEF	COEFFICIENT
COL	COLUMN
COMM/COMM.	COMMUNICATIONS
CONC.	CONCRETE
CONN.	CONNECTION
COV.	COVER
CULV.	CULVERT
CPP	CORRUGATED PLASTIC PIPE
CY	CUBIC YARD
DIA/DIA.	DIAMETER
DI	DUCTILE IRON
DIM/DIM.	DIMENSION
DEG/DEG.	DEGREE
DEMO/DEMO.	DEMOLITION
DEPT.	DEPARTMENT
DMH	DROP MANHOLE
DS	DOWNSPOUT
EA	EACH
E	EAST
EE	EACH END
EG	EDGE OF GRAVEL
EHH	ELECTRICAL HAND HOLE
ELEV.	ELEVATION
EM	EDGE OF METAL
ENG/ENG.	ENGINEER
ENT.	ENTRANCE
EQUIP.	EQUIPMENT
ES	END SECTION
EXCAV/EXCAV.	EXCAVATE
EX/EX.	EXISTING
EXPN	EXPANSION
FD	FLOOR DRAIN
FDC	FIRE DEPARTMENT CONNECTION
FDN	FOUNDATION
FDR	FULL DEPTH RECLAMATION
FF	FINISH FLOOR
FG	FINISH GRADE
FURN.	FURNISH
FP	FLOOD PLAIN
FT	FEET/FOOT
FTG	FOOTING
ELEV.	ELEVATION
EQUIP.	EQUIPMENT
GAL/GAL.	GALLON
GEN.	GENERAL
GIS	GEOGRAPHIC INFORMATION SYSTEM
GU	GUTTER
GV/GVA	GATE VALVE
GVL	GRAVEL
HD	HEAVY DUTY
HDPE	HIGH DENSITY POLYETHYLENE
HH	HANDHOLE
HP	HIGH POINT
HGL	HYDRAULIC GRADE LINE
HMA	HOT MIX ASPHALT PAVEMENT
HORIZ/HORIZ.	HORIZONTAL
HYD	HYDRANT
INT	INSTALL
LD	LIGHT DUTY
LF	LINEAR FEET
LP	LOW POINT
MAX/MAX.	MAXIMUM
ME	MATCH EXISTING
MDOT	MICHIGAN DEPARTMENT OF TRANSPORTATION
MH	MANHOLE
MIN/MIN.	MINIMUM
N	NORTH
NIC	NOT IN CONTRACT
NO	NUMBER
NFV	NOT FIELD VERIFIED
NTS	NOT TO SCALE
OC	ON CENTER
OD	OUTSIDE DIAMETER
PCC	PORTLAND CEMENT CONCRETE = CONCRETE
PVC	POLYVINYL CHLORIDE
PR	PROPOSED
RCP	REINFORCED CONCRETE PIPE
RY	REAR YARD
S	SOUTH
SAN	SANITARY SEWER
SBC	STABILIZED BASE COURSE
SESC	SOIL EROSION AND SEDIMENT CONTROL
SF	SQUARE FEET
SG	SUBGRADE
STM	STORM SEWER
SY	SQUARE YARD
TA	TOP OF HMA PAVEMENT ELEVATION
TC	TOP OF PROPOSED CURB
TERS	TEMPORARY EARTH RETENTION SYSTEM
TOP	TOP OF PAD (CONCRETE)
TOW	TOP OF WALL
TP	TEST PIT
TYP/TYP.	TYPICAL
TW	TOP OF SIDEWALK
VB	VAPOR BARRIER
VCP	VITRIFIED CLAY PIPE
VERT/VERT.	VERTICAL
VIF	VERIFY IN FIELD
VLT	VAULT
VOL	VOLUME
W	WEST
WM	WATER MAIN
WTR	WATER
WWF	WELDED WIRE FABRIC

DEFINITIONS USED IN DRAWINGS

THE FOLLOWING DEFINITIONS ARE USED ON THESE PLANS:

OWNER	FUTURE LAND HOLDINGS LLC
ENGINEER	PRIORITY ENGINEERING
CITY	LIVONIA, MI
COUNTY	WAYNE COUNTY, MI

PRIORITY ENGINEERING, LLC

Engineer's Seal

STATE OF MICHIGAN
TEON C SUJAK
License No. 6201046896
LICENSED PROFESSIONAL ENGINEER

Certification

North | SCALE

Project
BMW Motorcycles
South East Michigan

Project Location
19265 Victor Parkway
Livonia, Wayne Co.,
Michigan, 48152

Sheet Name
GENERAL PROJECT NOTES

Revisions

REV	ISSUED FOR	ISSUE DATE	BY

Date:	03/03/2025
Reviewed By:	BAH
ENG/CADD:	JGR
Checked By:	TCS
PE Project No.	25-0018
Sheet No.	C-101

DRAWING NOTE: SCALE SHOWN IS MEANT FOR 24" X 36" AND WILL SCALE INCORRECTLY IF PRINTED ON ANY OTHER SIZE MEDIA BESIDES 11" X 17"
NO REPRODUCTION SHALL BE MADE WITHOUT PRIOR CONSENT OF PRIORITY ENGINEERING, LLC.
© 2025

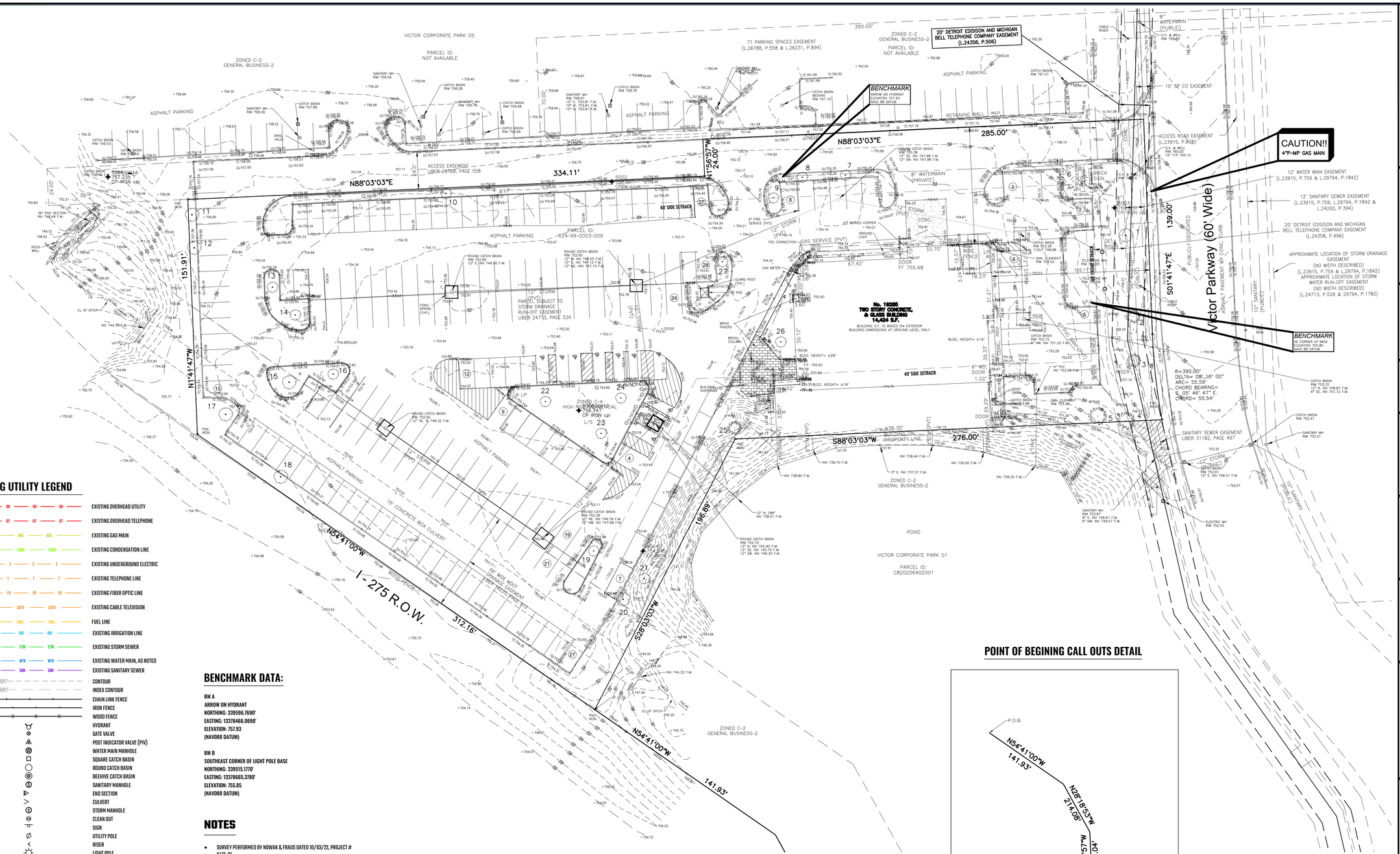

EXISTING UTILITY LEGEND

- EXISTING OVERHEAD UTILITY
- EXISTING OVERHEAD TELEPHONE
- EXISTING GAS MAIN
- EXISTING CONDENSATION LINE
- EXISTING UNDERGROUND ELECTRIC
- EXISTING TELEPHONE LINE
- EXISTING FIBER OPTIC LINE
- EXISTING CABLE TELEVISION
- FUEL LINE
- EXISTING IRRIGATION LINE
- EXISTING STORM SEWER
- EXISTING WATER MAIN, AS NOTED
- EXISTING SANITARY SEWER
- CONTOUR
- INDEX CONTOUR
- CHAIN LINK FENCE
- IRON FENCE
- WOOD FENCE
- HYDRANT
- GATE VALVE
- POST INDICATOR VALVE (PIV)
- WATER MAIN MANHOLE
- SQUARE CATCH BASIN
- ROUND CATCH BASIN
- BEEHIVE CATCH BASIN
- SANITARY MANHOLE
- END SECTION
- CULVERT
- STORM MANHOLE
- CLEAN OUT
- SIGN
- UTILITY POLE
- RISER
- LIGHT POLE
- LANDSCAPE LIGHT
- SPRINKLER
- ELECTRICAL BOX/TRANSFORMER
- ELECTRICAL MANHOLE
- FLAG POLE
- MAILBOX
- TC — TOP OF CURB
- GU — GUTTER
- 999.99 — EX. GRADE
- EM — EDGE OF ASPHALT
- TW — TOP OF WALL
- BW — BOTTOM OF WALL
- TREE
- CONCRETE
- ASPHALT PAVEMENT
- GRAVEL
- RIP-RAP
- SOIL BORING LOCATION

BENCHMARK DATA:

BM A
ARROW ON HYDRANT
NORTHING: 339596.7690'
EASTING: 1337846.0690'
ELEVATION: 757.93
(NAVD88 DATUM)

BM B
SOUTHEAST CORNER OF LIGHT POLE BASE
NORTHING: 339515.1770'
EASTING: 1337865.3780'
ELEVATION: 755.85
(NAVD88 DATUM)

NOTES

- SURVEY PERFORMED BY NOWAK & FRAUS DATED 10/03/22, PROJECT # K472-01.
- THIS SURVEY WILL NOT SHOW ALL EASEMENTS OF RECORD UNTIL AN UPDATED TITLE POLICY HAS BEEN FURNISHED TO THE SURVEYOR BY THE OWNER.
- ALL ELEVATIONS ARE RECORD/EXISTING ELEVATIONS
- THE LOCATION OF THE EXISTING UTILITIES AS SHOWN WERE OBTAINED FROM CLIENT PROVIDED DOCUMENTS, MUNICIPAL AND UTILITY COMPANIES RECORDS. NO GUARANTEE CAN BE MADE REGARDING THE COMPLETENESS OR EXACTNESS OF THE UTILITIES LOCATION. IT IS THE CONTRACTORS RESPONSIBILITY TO VERIFY IN THE FIELD THE LOCATION OF ALL UTILITIES.

FLOODPLAIN NOTE:

THE SUBJECT PROPERTY LIES IN FLOOD ZONE "X", ACCORDING TO FLOOD INSURANCE RATE MAP, MAP NO. 26163C0045E FOR WAYNE COUNTY, MICHIGAN, DATED FEBRUARY 2, 2012 AND ISSUED BY THE FEDERAL EMERGENCY MANAGEMENT AGENCY. LINES SHOWN HAVE BEEN DIGITALLY TRANSLATED FROM DFIRM DATABASE INFORMATION SUPPLIED BY THE FEMA MAP SERVICE CENTER HTTPS://MSC.FEMA.GOV).

POINT OF BEGINING CALL OUTS DETAIL

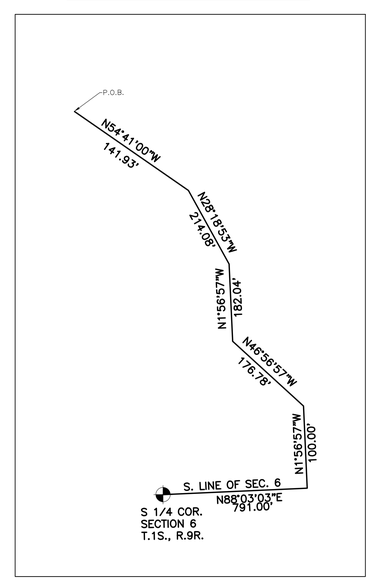

PRIORITY ENGINEERING, LLC

Engineer's Seal

Certification

North

SCALE
0' 30' 60'
GRAPHIC SCALE: 1" = 30'

Project
BMW Motorcycles South East Michigan

Project Location
19265 Victor Parkway Livonia, Wayne Co., Michigan, 48152

Sheet Name
EXISTING SITE CONDITIONS

Revisions

REV	ISSUED FOR	ISSUE DATE	BY

Date:	03/03/2025
Reviewed By:	BAH
ENG/CADD:	JGR
Checked By:	TCS
PE Project No.	25-0018
Sheet No.	C-200

DRAWING NOTE: SCALE SHOWN IS MEANT FOR 24" X 36" AND WILL SCALE INCORRECTLY IF PRINTED ON ANY OTHER SIZE MEDIA BESIDES 24" X 36"

NO REPRODUCTION SHALL BE MADE WITHOUT PRIOR CONSENT OF PRIORITY ENGINEERING, LLC.
© 2025

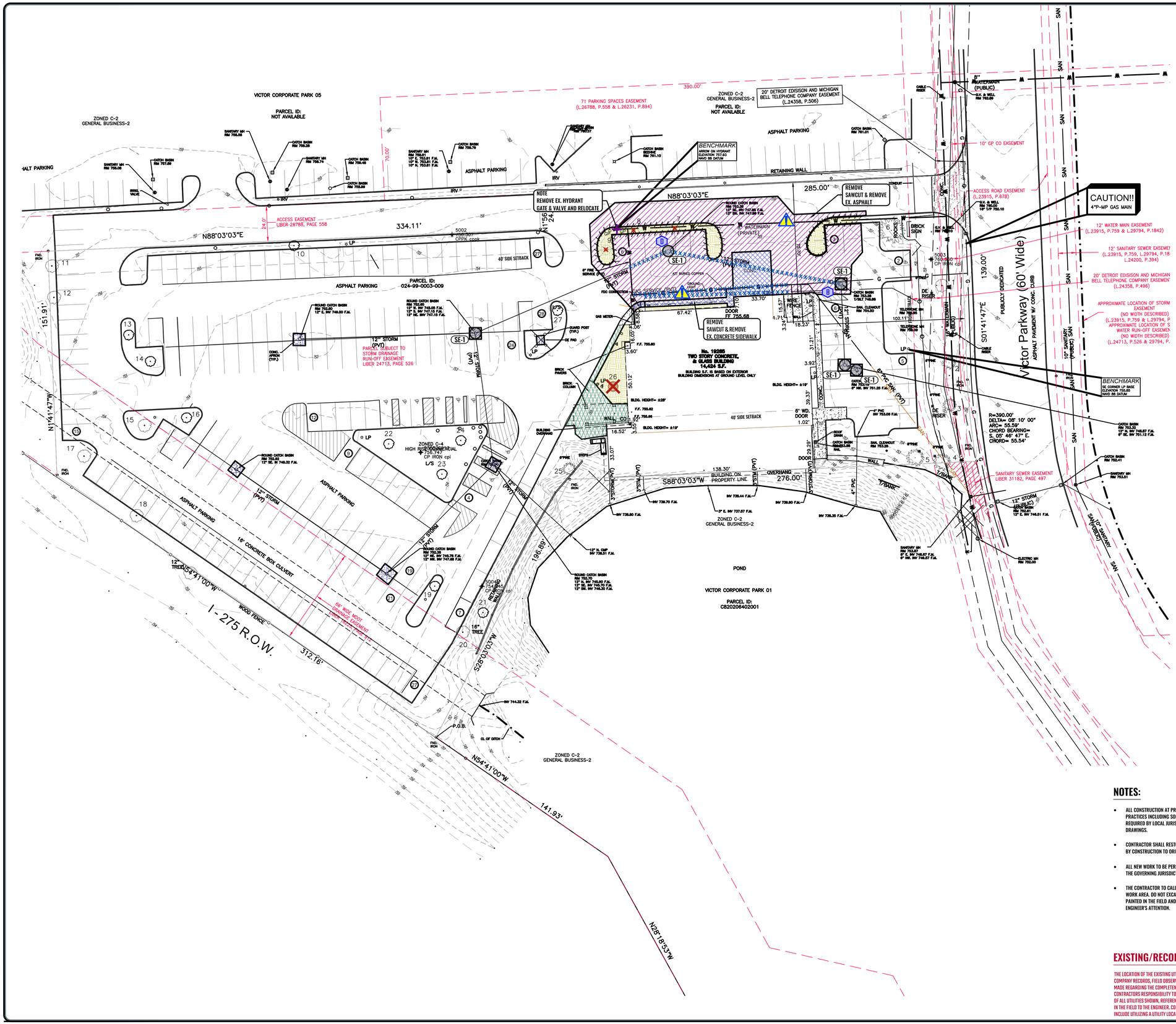

REMOVAL LEGEND

NOTE: REMOVAL SHALL INCLUDED SURFACE ITEMS NOTED BELOW IN ADDITION TO UNDERLYING BASE, SUBBASE, SUBGRADE AND DELETERIOUS MATERIAL TO ACCOMMODATE PROPOSED IMPROVEMENTS.

- SAWCUT & REMOVE EXISTING ASPHALT
- SAWCUT & REMOVE EXISTING CONCRETE SIDEWALK
- SAWCUT & REMOVE EXISTING CONCRETE PAVEMENT
- REMOVE EXISTING PAVERS
- CLEAR, GRUB & REMOVE EXISTING TREES/BRUSH
- AREA OF GRADING/EARTHWORK
- REMOVE CURB & GUTTER
- REMOVE EXISTING FENCE
- REMOVE EXISTING WALL
- REMOVE EXISTING UTILITY AS NOTED
- CAUTION!!!!! EXISTING UTILITY IN AREA *(SEE EXISTING/RECORD UTILITIES NOTE, THIS SHEET)*
- REMOVE/RELOCATE EXISTING MISC. ITEM AS NOTED ON PLANS
- REMOVE EXISTING TREE
- A — ADJUST RIM AS NOTED ON GRADING PLAN
- B — ADJUST EXISTING STRUCTURE RIM/VALVE AS NOTED ON THE GRADING PLAN
- C — CONTRACTOR TO RECONSTRUCT/REPLACE ENTIRE STRUCTURE
- D — REMOVE AND DISPOSE OF EXISTING CATCH BASIN
- E — REMOVE AND DISPOSE OF EXISTING MANHOLE
- R-SGN — REMOVE AND DISPOSE OF EXISTING SIGN, POST AND FOUNDATION.
- R-BOL — REMOVE AND DISPOSE OF EXISTING BOLLARD.
- R-LP — REMOVE AND DISPOSE OF EXISTING LIGHT FIXTURE, POLE AND BASE.
- SB-# — SOIL BORING LOCATION (SEE GEOTECHNICAL REPORT BY OTHERS)

SOIL EROSION CONTROL LEGEND

I.D.	SYMBOL	DESCRIPTION
SE-1		FURNISH & INSTALL PAVEMENT INLET PROTECTION FILTER PER GOVERNING AGENCIES STANDARDS & SPECIFICATIONS

EROSION CONTROL NOTES:

EARTH DISTURBANCE IS NOT PERMITTED OUTSIDE THE NOTED DISTURBANCE LIMITS. DISTURBANCE IS NOT PERMITTED WITHIN THE FLOODPLAIN LIMITS.

EARTH EXCAVATION FOR THIS PROJECT SHALL INCLUDE THE EXCAVATION FOR UNDERGROUND UTILITIES & SITE BALANCING TO REACH FINAL PAVEMENT SUBGRADE LEVELS.

THE CONTRACTOR IS RESPONSIBLE FOR THE INSTALLATION & MAINTENANCE OF ALL SOIL EROSION & SEDIMENTATION CONTROL (SESC) MEASURES, INCLUDING DUST CONTROL.

THE FOLLOWING MINIMUM SESC MEASURES SHALL BE INSTALLED PRIOR TO CONSTRUCTION & MAINTAINED UNTIL CONSTRUCTION IS COMPLETE & TURF IS ESTABLISHED:

1. MUD MATS AT SITE ENTRANCE/EXIT POINTS TO MINIMIZE THE TRACKING OF DEBRIS/SOIL ONTO ROADWAYS OR NEIGHBORING PROPERTY. MUD MATS SHALL CONSIST OF LARGE COARSE AGGREGATE OVERLYING A GEOTEXTILE SEPARATOR FABRIC.
2. STOCKPILED SOILS SHALL BE COVERED OR OTHERWISE PROTECTED FROM ERODING INTO OFFSITE AREAS.
3. THE CONTRACTOR SHALL ESTABLISH PERMANENT STABILIZATION OF ALL EXPOSED AREAS WITHIN 7 DAYS OF FINAL GRADING.
4. BURLAP &/OR STRAW BALES ARE NOT ALLOWED.
5. SEDIMENT TRAPS (I.E., SILT SACKS) SHALL BE INSTALLED AT EXISTING & NEWLY INSTALLED INLET STRUCTURES & SHALL BE MAINTAINED THROUGHOUT CONSTRUCTION.
6. SILT FENCING SHALL BE INSTALLED ALONG THE PERIMETER OF THE DISTURBED LIMITS (SEE PLAN) & MAINTAINED.

NOTES:

- ALL CONSTRUCTION AT PROJECT SITE WILL USE BEST MANAGEMENT PRACTICES INCLUDING SOIL EROSION CONTROL MEASURES, AS ALSO REQUIRED BY LOCAL JURISDICTION, AND NOTED ON THE CONSTRUCTION DRAWINGS.
- CONTRACTOR SHALL RESTORE AND REPAIR ANY DAMAGED AREAS CAUSED BY CONSTRUCTION TO ORIGINAL OR BETTER CONDITION.
- ALL NEW WORK TO BE PERFORMED PER STANDARDS AND SPECIFICATIONS OF THE GOVERNING JURISDICTION.
- THE CONTRACTOR TO CALL 811 TO MARK EXISTING UTILITIES WITHIN THE WORK AREA. DO NOT EXCAVATE UNTIL EXISTING UTILITIES HAVE BEEN PAINTED IN THE FIELD AND ANY CONCERNS NEED TO BE BROUGHT TO THE ENGINEER'S ATTENTION.

BENCHMARK DATA:

BM A
ARROW ON HYDRANT
NORTHING: 3395967.6690'
EASTING: 13378466.0690'
ELEVATION: 757.93
(NAVD88 DATUM)

BM B
SOUTHEAST CORNER OF LIGHT POLE BASE
NORTHING: 3395915.1770'
EASTING: 13378665.3780'
ELEVATION: 755.85
(NAVD88 DATUM)

EXISTING/RECORD UTILITIES NOTE

THE LOCATION OF THE EXISTING UTILITIES AS SHOWN WERE OBTAINED FROM MUNICIPAL AND UTILITY COMPANY RECORDS, FIELD OBSERVATIONS AND OWNER PROVIDED DRAWINGS. NO GUARANTEE CAN BE MADE REGARDING THE COMPLETENESS OR EXACTNESS OF THE UTILITIES LOCATION. IT IS THE CONTRACTORS RESPONSIBILITY TO VERIFY IN THE FIELD THE EXACT HORIZONTAL AND VERTICAL LOCATION OF ALL UTILITIES SHOWN, REFERENCED OR MARKED IN THE FIELD. CONTRACTOR TO REPORT ANY CONFLICTS IN THE FIELD TO THE ENGINEER. CONTRACTOR METHODS FOR UTILITY LOCATING SHALL AT A MINIMUM INCLUDE UTILIZING A UTILITY LOCATING COMPANY, HYDRO EXCAVATION, SOFT DIG AND POT HOLING.

PRIORITY ENGINEERING, LLC

Engineer's Seal

STATE OF MICHIGAN
TEON C SUJAK
License No. 6201046896
LICENSED PROFESSIONAL ENGINEER

Certification

North

SCALE
0' 30' 60'
GRAPHIC SCALE: 1" = 30'

Project
BMW Motorcycles South East Michigan

Project Location
19265 Victor Parkway Livonia, Wayne Co., Michigan, 48152

Sheet Name
REMOVAL/DEMOLITION PLAN

Revisions

REV	ISSUED FOR	ISSUE DATE	BY

Date:	03/03/2025
Reviewed By:	BAH
ENG/CADD:	JGR
Checked By:	TCS
PE Project No.	25-0018
Sheet No.	C-300

DRAWING NOTE: SCALE SHOWN IS MEANT FOR 24" X 36" AND WILL SCALE INCORRECTLY IF PRINTED ON ANY OTHER SIZE MEDIA REGARDLESS OF % OF
NO REPRODUCTION SHALL BE MADE WITHOUT PRIOR CONSENT OF PRIORITY ENGINEERING, LLC.
© 2025

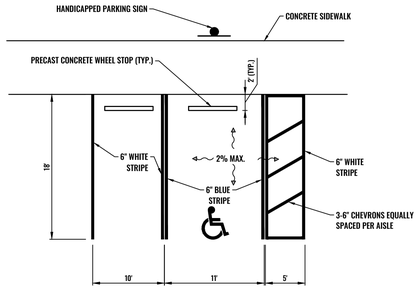

NOTES:

1. ACCESSIBLE PARKING SPACES AND ACCESS AISLES SHALL BE LEVEL WITH SURFACE SLOPES NOT EXCEEDING 1:50 (2%) IN ALL DIRECTIONS PER ADA STANDARDS

ADA VAN ACCESIBLE PARKING SPACE

NOT TO SCALE

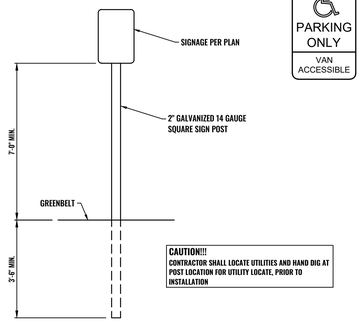

CAUTION!!!
CONTRACTOR SHALL LOCATE UTILITIES AND HAND DIG AT POST LOCATION FOR UTILITY LOCATE, PRIOR TO INSTALLATION

R7-8 (12" x 18") VAN ACCESSIBLE
1.5 SFT SIGN, TYPE IIIA (SIGN TO BE FIXED TO FENCE WITH BOTTOM OF SIGN AT 7' FROM GROUND SURFACE)

PARKING SIGN WITH POST IN GREENBELT

NOT TO SCALE

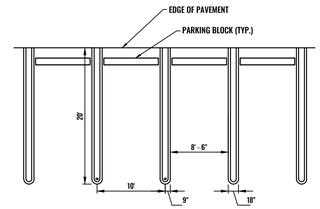

CITY OF LIVONIA PARKING SPACE STRIPPING

NOT TO SCALE

SITE LAYOUT NOTES:

- ALL WORK SHALL COMPLY WITH VILLAGE/COUNTY /STATE/FEDERAL REGULATIONS, CODES & STANDARDS.
- ALL DIMENSIONS & RADII ARE TO THE FACE OF CURB UNLESS OTHERWISE NOTED.
- CONTRACTOR SHALL REFER TO THE APPROVED ARCHITECTURAL PLANS FOR PROPOSED BUILDING DIMENSIONS & UTILITY ENTRANCE LOCATIONS.
- ALL PROPOSED ADA RAMPS, PARKING AREAS & ACCESSIBLE ROUTES SHALL STRICTLY COMPLY WITH CURRENT LOCAL, STATE, AND FEDERAL REGULATIONS, INCLUDING BUT NOT NECESSARILY LIMITED TO THE ADA (AMERICANS WITH DISABILITIES ACT) ACCESSIBILITY GUIDELINES (ADAAG).
- ALL ADA ACCESSIBLE ROUTES SHALL HAVE DETECTABLE WARNINGS INSTALLED AS REQUIRED BY THE ADAAG.
- CONTRACTOR SHALL BE RESPONSIBLE FOR ALL RELOCATIONS, (UNLESS OTHERWISE NOTED ON PLANS) INCLUDING BUT NOT LIMITED TO, ALL UTILITIES, STORM DRAINAGE, SIGNS, TRAFFIC SIGNALS & POLES, ETC. AS REQUIRED. ALL WORK SHALL BE IN ACCORDANCE WITH GOVERNING AUTHORITIES REQUIREMENTS AND PROJECT SITE WORK SPECIFICATIONS AND SHALL BE APPROVED BY SUCH. ALL COST SHALL BE INCLUDED IN BASE BID.
- SEE ELECTRICAL PLANS FOR SITE LIGHTING & DETAILS.
- SEE LANDSCAPING PLANS FOR PLANTINGS & DETAILS.
- SEE ARCHITECTURAL DRAWINGS FOR MONUMENT SIGN DETAILS & MATERIAL.

PROJECT DESCRIPTION:

PROJECT SCOPE TO INCLUDE DEMOLITION AND REMOVAL OF EXISTING STRUCTURES, VEGETATION, PAVEMENT, ETC. AS NECESSARY TO CONSTRUCT A BUILDING ADDITION AND ASSOCIATED INFRASTRUCTURE SUCH AS CONCRETE PAVEMENT, CONCRETE CURB AND GUTTER, PARKING FACILITIES, UTILITIES, STORMWATER MANAGEMENT SYSTEM, LANDSCAPING, SITE SIGNAGE AND OTHER IMPROVEMENTS TO SERVICE THE SITE.

SITE DATA:

APPLICANT	FUTURE LAND HOLDINGS LLC
SITE ADDRESS	19265 VICTOR PARKWAY LIVONIA, MICHIGAN 30553
MUNICIPALITY	WAYNE COUNTY
PARCEL I.D.	46024990003009
PARCEL AREA	3.16 AC.
CURRENT ZONING	C-4 - HIGH RISE COMMERCIAL
PROPOSED ZONING	C-4 - HIGH RISE COMMERCIAL
NORTH ADJACENT ZONING	C-2 - GENERAL BUSINESS -2
EAST ADJACENT ZONING	RUF - RURAL URBAN FARM
SOUTH ADJACENT ZONING	C-2 - GENERAL BUSINESS -2
WEST ADJACENT ZONING	HIGHWAY
MAXIMUM BUILDING HEIGHT	2 STORIES - 35 FEET
MINIMUM LOT SETBACKS	
FRONT	40 FEET
SIDE	0 FEET (FIRE PROOF WALL, NO OPENINGS)
REAR	40 FEET
PARKING REQUIREMENTS	
MOTOR VEHICLE SALES:	SPACES REQUIRED = 1 PER 200 SF, UFA SALES AREA + 2 SPACES / SERVICE BAY 6734 USF SALES SHOWROOM AREA/ 200= 33.67 PARKING SPACES 4 SERVICE BAY: 4 x 2= 8 PARKING SPACES SPACES PROVIDED = 208 SPACES REQUIRED = 3 BARRIER FREE PARKING SPACES SPACES PROVIDED = 11 BARRIER FREE PARKING SPACES
LANDSCAPE BUFFER	10 FEET MIN.

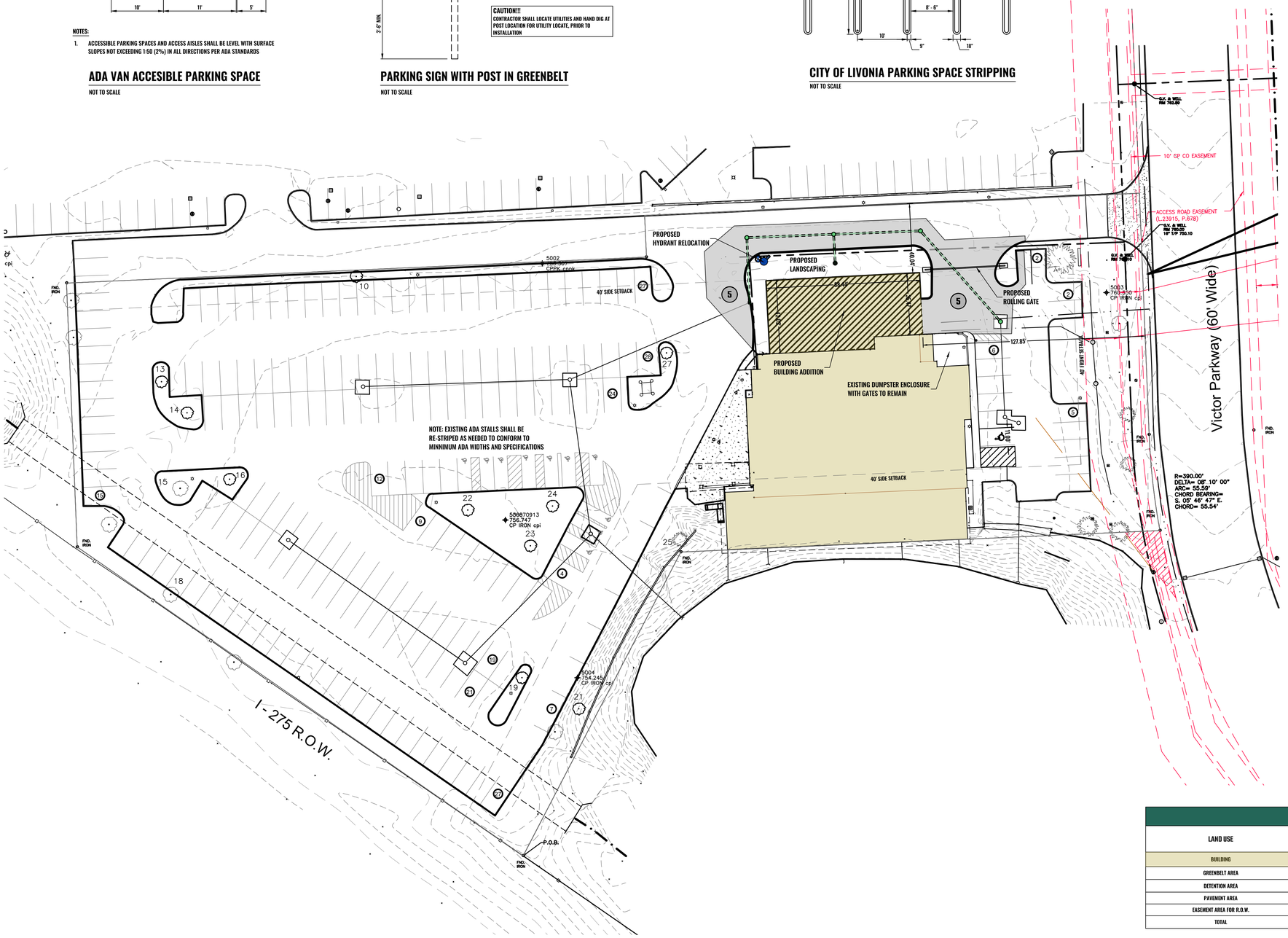

SITE LAYOUT LEGEND

I.D.	SYMBOL	DESCRIPTION
1		PAY STATION CANOPY • SEE ARCHITECTURAL PLAN FOR DETAILS
2		PROPOSED SIGN • SEE PAVEMENT MARKING & SIGNAGE PLAN FOR DETAILS
3		VACUUM EQUIPMENT ENCLOSURE • SEE ARCHITECTURAL PLAN FOR DETAILS
4		20' X 12' CONCRETE DUMPSTER PAD & ENCLOSURE • SEE ARCHITECTURAL PLANS FOR DUMPSTER DETAIL • SEE SHEET D-100 FOR PIPE BOLLARD DETAIL
5		ASPHALT PAVEMENT SECTION • SEE DETAIL SHEET FOR PAVEMENT SECTION
6		CONCRETE SIDEWALK • SEE DETAIL SHEET FOR PAVEMENT SECTION
7		INTEGRAL CONCRETE CURB AND GUTTER • SEE DETAIL SHEET FOR PAVEMENT SECTION
8		DRAINAGE STRUCTURE • SEE UTILITY PLAN FOR DETAILS
9		DOWNSPOUT • SEE UTILITY PLAN FOR DETAILS
		PROPERTY BOUNDARY LINE
		PROPOSED EASEMENT (AS NOTED)
		PROPOSED R.O.W. LINE
		PROPOSED SETBACK LINE
		PROPOSED RETAINING WALL
		HYDRANT
		GATE VALVE

LAND USE TABLE

LAND USE	AREA (SF)	AREA (ACRES)	DENSITY
BUILDING	17,975	.41	12.9%
GREENBELT AREA	28,324	.65	20.3%
DETENTION AREA	0	0	0
PAVEMENT AREA	93,347	2.14	66.8%
EASEMENT AREA FOR R.O.W.	0	0	0
TOTAL	139,646	3.2	100%

PRIORITY ENGINEERING, LLC

Engineer's Seal

STATE OF MICHIGAN
TEON C SUJAK
License No. 6201046896
LICENSED PROFESSIONAL ENGINEER

Certification

North

SCALE
0' 30' 60'
GRAPHIC SCALE: 1" = 30'

Project
BMW Motorcycles South East Michigan

Project Location
19265 Victor Parkway Livonia, Wayne Co., Michigan, 48152

Sheet Name
SITE PLAN

Revisions

REV	ISSUED FOR	ISSUE DATE	BY

Date:	03/03/2025
Reviewed By:	BAH
ENG/CADD:	JGR
Checked By:	TCS
PE Project No.	25-0018
Sheet No.	C-400

DRAWING NOTE: SCALE SHOWN IS RELVANT FOR 24" X 36" AND WILL SCALE INCORRECTLY IF PRINTED ON ANY OTHER SIZE MEDIUM BESIDES 11" X 17"

NO REPRODUCTION SHALL BE MADE WITHOUT PRIOR CONSENT OF PRIORITY ENGINEERING, LLC.
© 2025

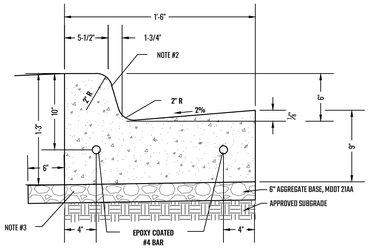

CURB & GUTTER TYPE F - DETAIL

NOT TO SCALE

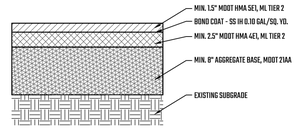

HMA OVER AGGREGATE BASE - STANDARD DUTY - DETAIL

NOT TO SCALE

NOTE:
APPLY BOND COAT OF SS-IH (0.1 GALLONS/S.Y.) BETWEEN ALL HMA LAYERS

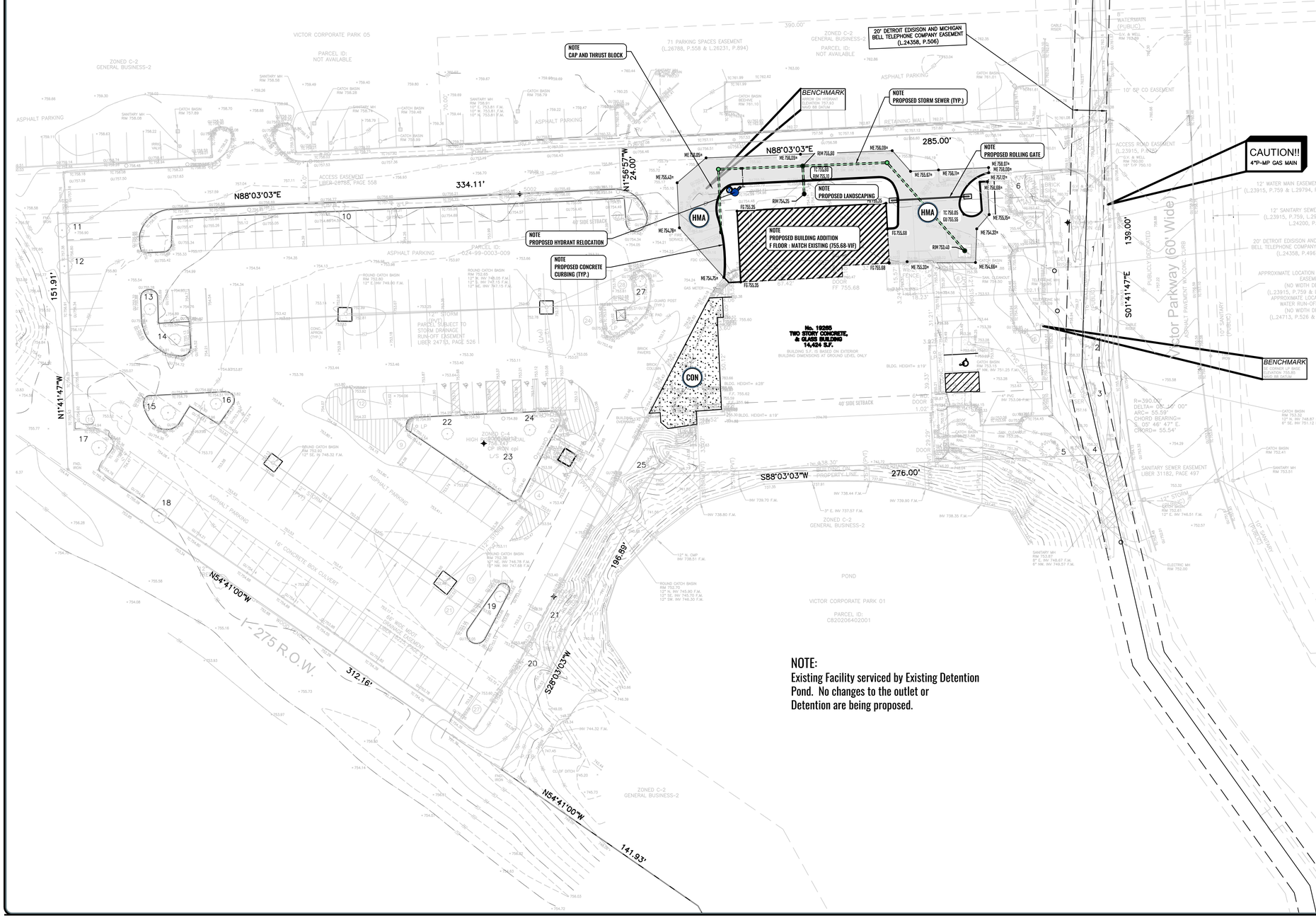

NOTE:
Existing Facility serviced by Existing Detention Pond. No changes to the outlet or Detention are being proposed.

PAVING, GRADING & DRAINAGE LEGEND

- PROPERTY BOUNDARY LINE
- PROPOSED LOT LINE
- PROPOSED R.O.W. LINE
- PROPOSED SETBACK LINE
- PROPOSED EASEMENT (AS NOTED)
- 80 — PROPOSED CONTOUR
- 80 — EXISTING CONTOUR
- PROPOSED STORM SEWER
- HMA — PROPOSED HMA PAVEMENT SECTION
- CNW — PROPOSED CONCRETE SIDEWALK
- CON — PROPOSED CONCRETE PAVEMENT
- THW — PROPOSED CONCRETE SIDEWALK W/THICKENED EDGE
- RPRP — PROPOSED CONCRETE PAVEMENT
- GRV — PROPOSED GRAVEL SECTION
- PROPOSED LANDSCAPING
- PROPOSED BUILDING
- CB — PROPOSED STANDARD CURB
- CB-R — PROPOSED REVERSE (SPILL OUT) CURB
- IN — PROPOSED INTEGRAL CURB
- TYPE __ ADA RAMP — PROPOSED ADA RAMP W/TRUNCATED DOME INSERT
- PROPOSED DRAINAGE INLET STRUCTURE
- PROPOSED DRAINAGE MANHOLE
- PROPOSED DRAINAGE END SECTION (OUTFALL)
- PROPOSED CATCH BASIN
- PROPOSED REAR YARD CATCH BASIN
- MECH — PROPOSED MECHANICAL FOREBAY
- PROPOSED OUTLET CONTROL STRUCTURE
- PROPOSED OVERFLOW MANHOLE
- PROPOSED CLEANOUT
- PROPOSED DOWNSPOUT
- 81.19 — PROPOSED SPOT ELEVATION
- SLOPE DIRECTION (PAVEMENT)
- SLOPE DIRECTION (GREENBELT)
- HYDRANT
- GATE VALVE

PAVING & GRADING NOTES

- CONTRACTOR TO CONTACT 811 AT LEAST THREE WORKING DAYS PRIOR TO EXCAVATION/CONSTRUCTION FOR UTILITY LOCATIONS.
- PROPOSED ELEVATIONS ARE SHOWN WHERE SIGNIFICANT GRADE CHANGES ARE ANTICIPATED. IF PROPOSED GRADES ARE NOT SHOWN THE CONTRACTOR SHALL BE RESPONSIBLE FOR PROVIDING POSITIVE DRAINAGE WITH MIN. SLOPE OF 1.0%, LONGITUDINAL SLOPE ALONG GUTTER LINES SHALL BE 0.5% MIN.
- PRIOR TO INSTALLING ANY PAVEMENT LAYERS, THE CONTRACTOR SHALL REVIEW THE PROPOSED SITE GRADES WITH THE ENGINEER TO IDENTIFY AND RECTIFY ANY COMPLICATIONS.
- PROPOSED SIDEWALKS SHALL HAVE MIN. 1.0% AND MAX. 2.0% CROSS SLOPE AND A MAX. 5.0% RUNNING SLOPE UNLESS PARALLEL TO AN EXISTING DRIVE/ROAD.
- ADA ACCESSIBLE AREAS SHALL NOT EXCEED THE FOLLOWING SLOPES:
  RAMPS - 1:12 (8.3%) MAX.
  ROUTES - 1:20 (5.0%) MAX.
  PARKING - 1:50 (2.0%) MAX.
  CROSS SLOPES - 1:50 (2.0%) MAX.
- CONTRACTOR SHALL ADJUST ALL UTILITY RIMS LOCATED WITHIN THE WORK LIMITS AS NECESSARY TO BE FLUSH WITH THE PROPOSED FINISHED SURFACE. THIS INCLUDES ALL STORM MANHOLES, CATCH BASINS, CLEANOUTS, SANITARY MANHOLES AND CLEANOUTS, WATER MAIN MANHOLES, GATE VALVES, AND BOXES OR ANY OTHER UTILITY RIMS OR BOXES.
- WHERE PROPOSED PAVEMENT ABUTS EXISTING PAVEMENT DESIGNATED TO REMAIN, MATCH ELEVATIONS UNLESS INDICATED OTHERWISE ON THE PLANS.
- ADJUST GUTTER PAN FROM SPILL IN TO SPILL OUT AS REQUIRED TO ACHIEVE POSITIVE DRAINAGE AND AS INDICATED ON PLANS.
- ADJUST ELEVATION OF CURB REPAIRS AS REQUIRED TO ACHIEVE POSITIVE DRAINAGE.
- TAPER CURB HEIGHT TO 0" IN 5' WHEN ABUTTING TO EX. PAVEMENT WITHOUT CURB.
- NEW PAVEMENT SHALL BE OF THE TYPE, THICKNESS AND CROSS-SECTION INDICATED ON THE PLANS OR REFERRED BY A GEOTECHNICAL ENGINEER.
- MATCH EXISTING ELEVATIONS WHERE NEW PAVEMENT ABUTS EXISTING PAVEMENTS OR OTHER FIXED OBJECTS.
- CONTRACTOR SHALL MATCH EXISTING STRIPING PATTERNS UNLESS OTHERWISE SHOWN ON THE PLANS. CONTRACTOR SHALL DOCUMENT EXISTING STRIPING PATTERN PRIOR TO REMOVAL OF ANY PAVEMENT.
- CONTRACTOR IS RESPONSIBLE FOR LAYOUT TO PROVIDE POSITIVE SITE DRAINAGE. WATER PONDING AND BIRD BATHS SHALL BE CORRECTED AS DIRECTED BY THE ENGINEER AT NO ADDITIONAL COST TO THE OWNER.
- NEW AGGREGATE BASE REQUIRED SHALL BE MDOT 21AA CRUSHED LIMESTONE MATERIAL.
- THE CONTRACTOR SHALL BE RESPONSIBLE FOR DETERMINING EXACT QUANTITIES OF CUT AND/OR FILL FOR ESTIMATING AND CONSTRUCTION AND SHOULD ALERT THE ENGINEER OF ANY EXCESSIVE CUT AND/OR FILL, ESPECIALLY IF ADDITIONAL CUT AND/OR FILL WILL BE REQUIRED DUE TO POOR EXISTING SOIL CONDITIONS DISCOVERED DURING EARTHWORK OPERATIONS.
- THE CONTRACTOR SHALL OBTAIN A COPY OF THE GEOTECHNICAL / SOILS REPORT AND BECOME THOROUGHLY FAMILIAR WITH SITE AND SUBGRADE INFORMATION AND FULLY IMPLEMENT RECOMMENDATIONS GIVEN THEREIN.
- SUBGRADE SOIL FOUND TO BE UNSUITABLE SHALL BE RECONDITIONED OR REPLACED AS DIRECTED BY THE ENGINEER, INCLUDING THE NECESSARY FINE GRADING TO ENSURE THAT MINIMUM SPECIFIED PAVEMENT THICKNESS IS ACHIEVED.

PRIORITY ENGINEERING, LLC

Engineer's Seal

STATE OF MICHIGAN
TEON C SUJAK
License No. 6201046896
LICENSED PROFESSIONAL ENGINEER

Certification

North

SCALE
0' 30' 60'
GRAPHIC SCALE: 1" = 30'

Project
BMW Motorcycles
South East Michigan

Project Location
19265 Victor Parkway
Livonia, Wayne Co.,
Michigan, 48152

Sheet Name
PAVING & GRADING PLAN

Revisions

REV	ISSUED FOR	ISSUE DATE	BY

Date:	03/03/2025
Reviewed By:	BAH
ENG/CADD:	JGR
Checked By:	TCS
PE Project No.	25-0018
Sheet No.	C-500

DRAWING NOTE: SCALE SHOWN IS MEANT FOR 24" X 36" AND WILL SCALE INCORRECTLY IF PRINTED ON ANY OTHER SIZE MEDIA REGARDLESS OF % OF
NO REPRODUCTION SHALL BE MADE WITHOUT PRIOR CONSENT OF PRIORITY ENGINEERING, LLC.
© 2025

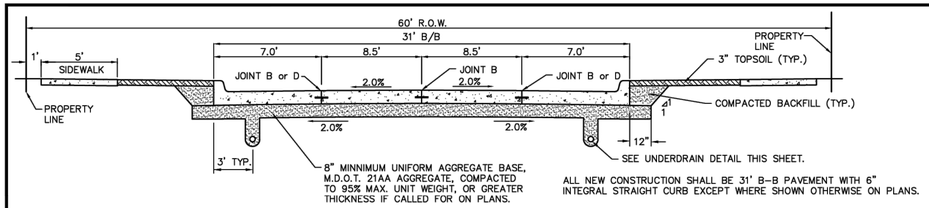

31' LOCAL STREET CROSS-SECTION

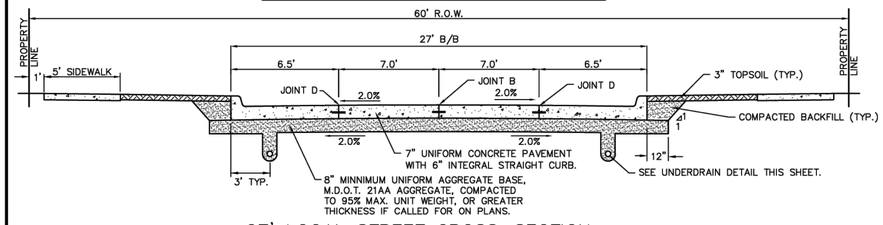

27' LOCAL STREET CROSS-SECTION

TRANSVERSE EXPANSION JOINT (E)

1. TRANSVERSE PLANE OF WEAKNESS JOINTS SHALL BE CONSTRUCTED IMMEDIATELY AFTER THE FINISHING OPERATION HAS BEEN COMPLETED. THE TRANSVERSE PLANE OF WEAKNESS JOINTS SHALL BE PLACED AT 12.5 FOOT INTERVALS BETWEEN TRANSVERSE EXPANSION JOINTS.
2. TRANSVERSE PLANE OF WEAKNESS JOINTS SHALL BE SEALED WITH LOW MODULUS HOT-POURED RUBBER-ASHPALT TYPE JOINT SEALING COMPOUND EXCEPT FOR IN CONCRETE BASE COURSE.
3. WHEN A JOINT FALLS WITHIN 5 FT. OF OR CONTACTS BASINS, MANHOLES, OR OTHER STRUCTURES, SHORTEN ONE OR MORE PANELS EITHER SIDE OF THE STRUCTURE TO PERMIT JOINT TO FALL ON CENTERLINE OF ROUND STRUCTURES AND AT CORNER OF RECTANGULAR STRUCTURES, OR AS DIRECTED BY THE ENGINEER.

TRANSVERSE WEAKENED PLANE JOINT (WT)

TRANSVERSE WEAKENED PLANE JOINT (WT)

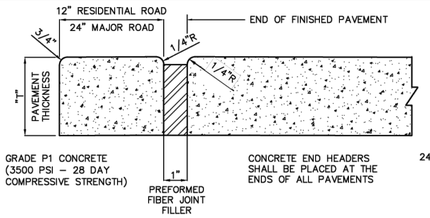

END HEADER DETAIL

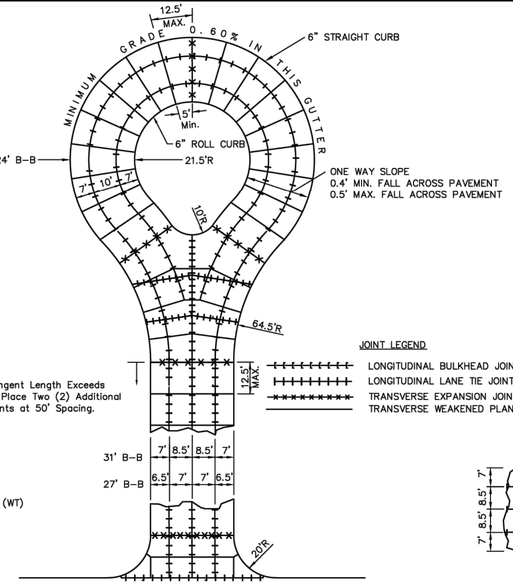

RESIDENTIAL CUL-DE-SAC JOINT LAYOUT DETAIL

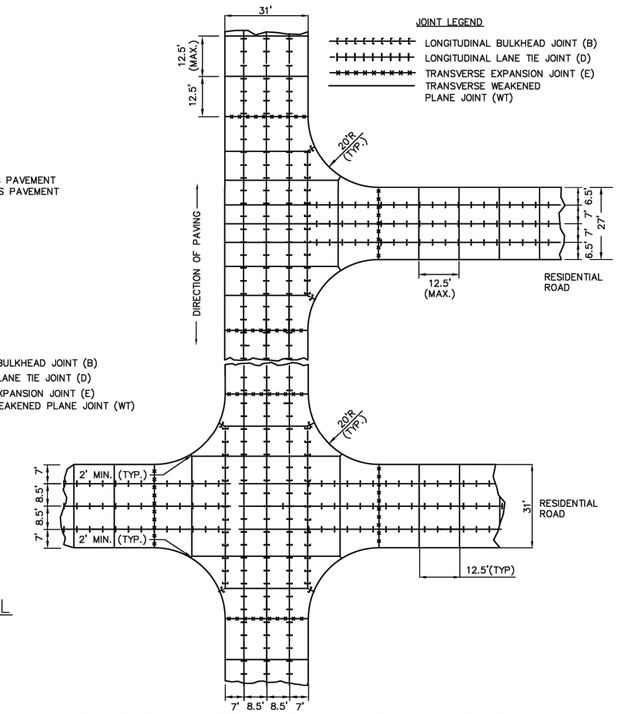

RESIDENTIAL INTERSECTION JOINT LAYOUT DETAILS

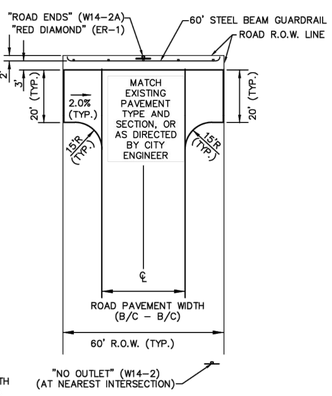

T-TURN DETAIL

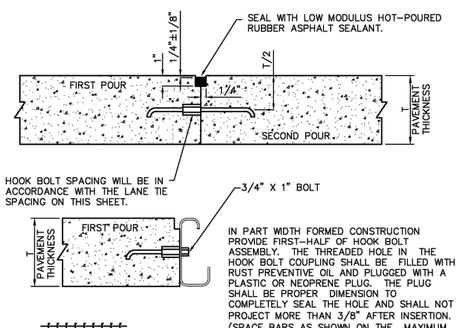

LONGITUDINAL FORMED BULKHEAD CONST. JOINT WITH HOOK-BOLT ASSEMBLY (B2)

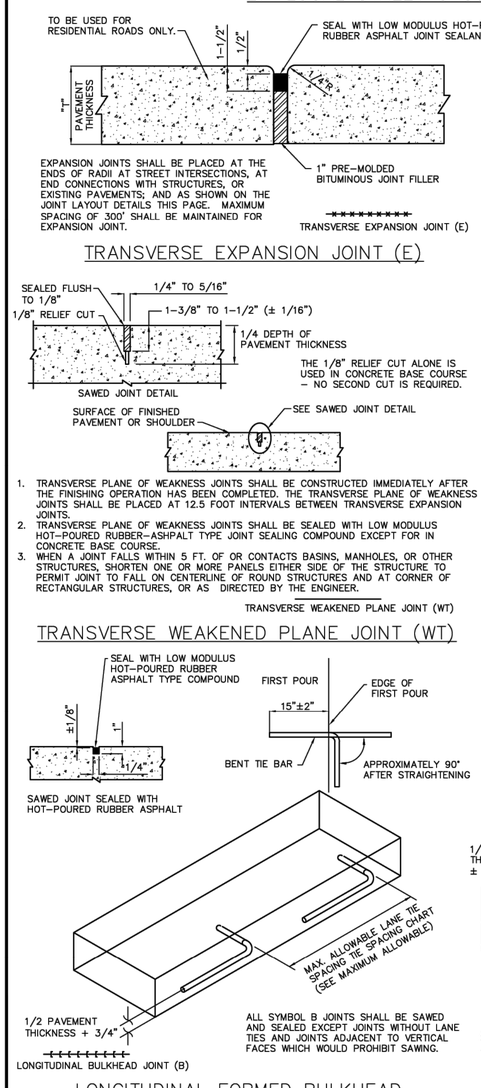

LONGITUDINAL FORMED BULKHEAD CONSTRUCTION JOINT WITH LANE TIES (B1)

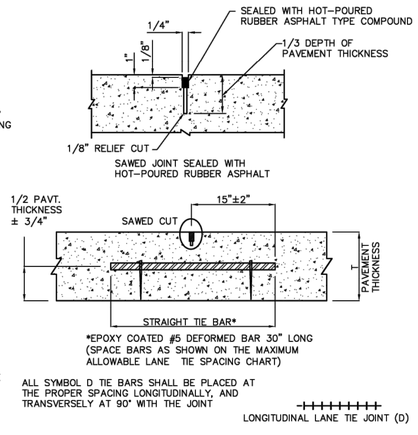

LONGITUDINAL LANE TIE JOINT (D)

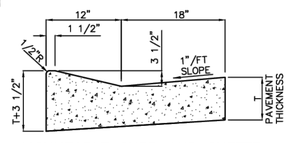

MOUNTABLE CURB AND GUTTER

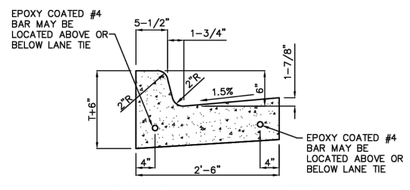

STRAIGHT CURB AND GUTTER

NOTES:
PLANE OF WEAKNESS JOINTS SHALL BE PLACED BETWEEN EXPANSION JOINTS AT APPROXIMATELY 12.5' INTERVALS ON RESIDENTIAL STREETS.

EXPANSION JOINTS SHALL BE PLACED 10' EACH SIDE OF ALL CATCH BASINS AND AT THE ENDS OF RADII AT ALL STREET RETURNS AND SEALED WITH HOT-POURED RUBBER ASPHALT COMPOUND.

MATCH CONCRETE PAVEMENT JOINTS NOT TO EXCEED 25' SPACINGS.

"T" IS THE DEPTH OF PROPOSED CURB AND GUTTER SECTION THAT SHALL MATCH THE THICKNESS OF PROPOSED PAVEMENT, UNLESS OTHERWISE DIRECTED BY CITY OF LIVONIA ENGINEER OR AS SHOWN ON APPROVED PLANS.

PLACE 1" FIBER JOINT FILLER AT 300' MAXIMUM INTERVALS.

CURB AND GUTTER DETAILS

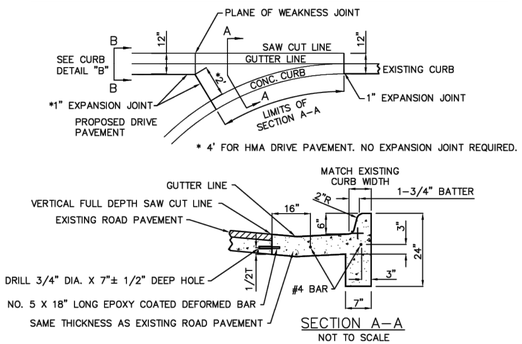

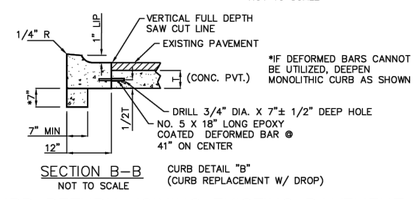

CURB RETURN JOINING EXISTING PAVEMENT

MAX. ALLOWABLE LANE TIE SPACING JOINTS B AND D		TOTAL DISTANCE OF TIED JOINT FROM NEAREST FREE EDGE**
JOINT B GRADE 40	JOINT D GRADE 60	
2'-10"	3'-7"	12' OR LESS
1'-11"	2'-7"	OVER 12' THROUGH 17'
1'-5"	1'-11"	OVER 17' THROUGH 24'
1'-2"	1'-9"	OVER 24' THROUGH 28'
1'-2"	1'-4"	OVER 28' THROUGH 36'
1'-1"	1'-1"	36' OR GREATER***

**INCLUDES ANY TIED COMBINATION OF LANE WIDTH, VALLEY GUTTER, CURB & GUTTER, OR SHOULDER.

***FOR WIDTHS GREATER THAN 48' USE #6 DEFORMED BARS AT 1'-2" SPACING.

MAXIMUM ALLOWABLE LANE TIE SPACING CHART

1. ALL MATERIALS AND WORKMANSHIP FOR CONCRETE PAVEMENT CONSTRUCTION SHALL BE IN ACCORDANCE WITH THE CURRENT MICHIGAN DEPARTMENT OF TRANSPORTATION (M.D.O.T.) STANDARD SPECIFICATIONS FOR CONSTRUCTION AS MODIFIED BY THE CITY ENGINEER.
2. ALL CONCRETE SHALL BE M.D.O.T. MIX P1, WITH A 28 DAY COMPRESSIVE STRENGTH OF AT LEAST 3500 P.S.I.. A MINIMUM CEMENT CONTENT OF 5.6 SACKS WITH WATER REDUCING AGENT OR 6 SACK. AIR ENTRAINMENT AT PLACEMENT SHALL BE 5-8% BY VOLUME, AND A SLUMP OF NOT MORE THAN 3-1/2" AND NOT LESS THAN 1-1/2".
3. ALL PAVEMENTS SHALL BE 27' OR 31' WIDE (BACK OF CURB TO BACK OF CURB) AND SHALL BE CONSTRUCTED OF 7" UNIFORM CONCRETE WITH A 6" INTEGRAL STRAIGHT CURB, EXCEPT WHERE SHOWN OTHERWISE ON THE PLANS. ALL INTERSECTIONS SHALL HAVE A MINIMUM RADII OF 20 FEET AND SHALL BE CONSTRUCTED OF 8" UNIFORM CONCRETE.
4. ELEVATIONS SHOWN ON THE PAVING PLAN ARE PROPOSED TOP OF CURB GRADES BASED UPON CURRENT WAYNE COUNTY DATUM. (U.S.C.&G.S.)

GENERAL NOTES

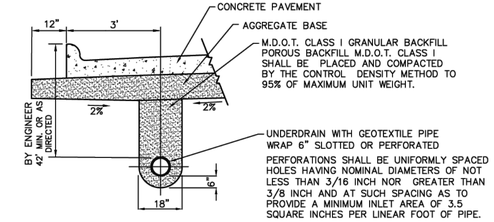

UNDERDRAIN MATERIAL SHALL BE:

HDPE MEETING ASTM 405 MATERIAL AND PERFORATION SPECIFICATION, TYPE SP (SMOOTH INNER WALL, PERFORATED) WITH FILTER,

OR PVC PIPE MEETING ASTM D 3034 MATERIAL AND PERFORATION SPECIFICATIONS WITH FILTER,

OR CORRUGATED STEEL PIPE WITH FILTER MEETING AASHTO M36, PERFORATIONS CONFORMING TO CLASS 1.

CORRUGATED STEEL PIPE SHALL BE MANUFACTURED WITH STEEL SHEETS NOT LESS THAN 0.052 INCH THICKNESS FOR 6-INCH UNDERDRAINS OR 0.064 INCHES FOR 8-INCH.

CONTRACTOR MAY FURNISH COUPLING BANDS THAT HAVE ENGINEERING APPROVED WEDGING, CLAMPING, OR OTHER FASTENERS INSTEAD OF BOLTS.

UNDERDRAIN DETAIL

Residential Street Concrete Pavement

JOB No. Conc-3	DATE: 2/25/11	1
	SHEET 1 OF 3	
REVISIONS:	REV. DATE	
Review Update	3/2012	CADD: dwl
6" Curb, 27' Pavement Details	1/2013	ENG: dwl
"1" Turn Around Revision	10/2013	PM: tz
		TECH:
		Concrete Paving Details.dwg
		FB#:

CITY OF LIVONIA
Department of Public Works - Engineering Division
33000 Civic Center Drive
Livonia, Michigan 48154
(734) 466-2570 Office, (734) 466-2195 Fax

RELEASED FOR :	DATE

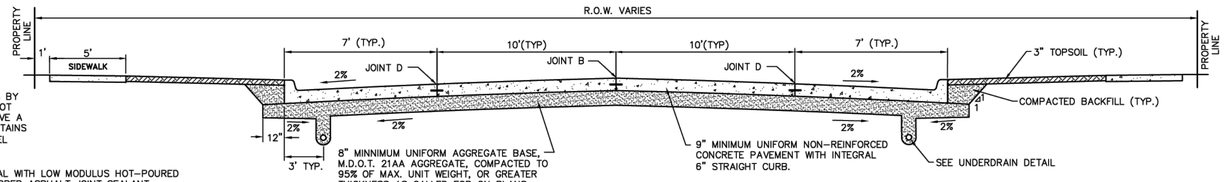

34' INDUSTRIAL ROAD CROSS-SECTION

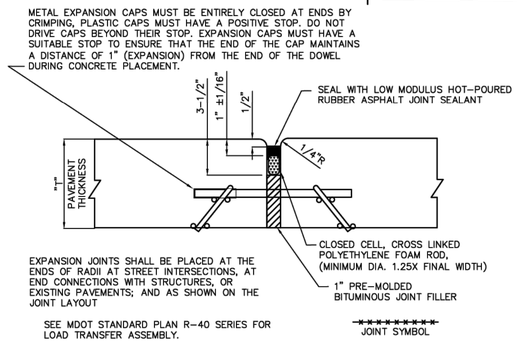

TRANSVERSE EXPANSION JOINT (E)

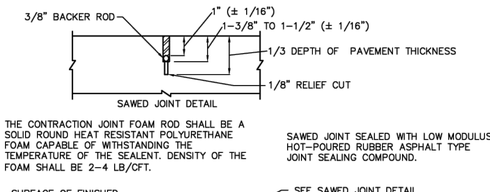

TRANSVERSE CONTRACTION JOINT (C)

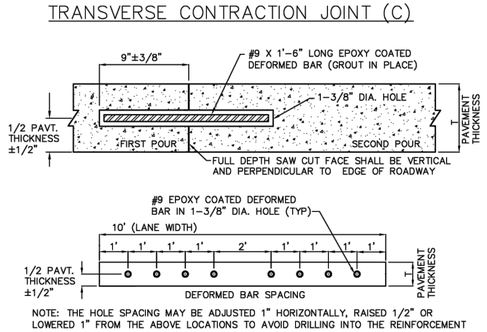

TRANSVERSE END OF POUR JOINT (H1) DRILLED IN METHOD

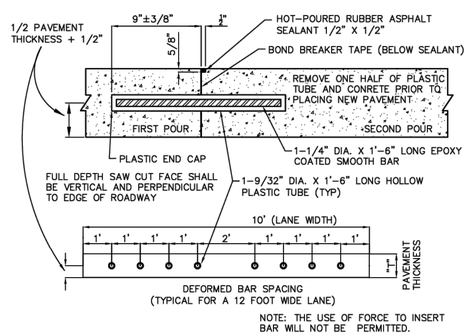

TRANSVERSE END OF POUR JOINT (H2) PLASTIC TUBE/SPLIT HEADER METHOD

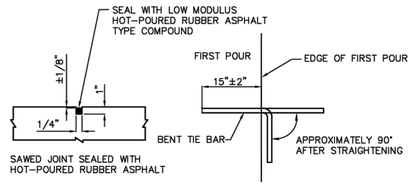

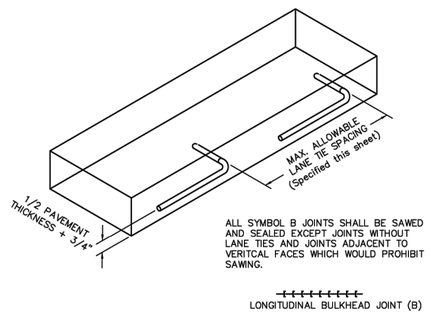

LONGITUDINAL FORMED BULKHEAD CONSTRUCTION JOINT WITH LANE TIES (B1)

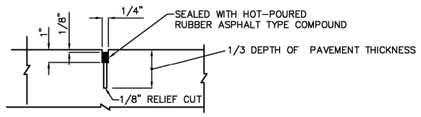

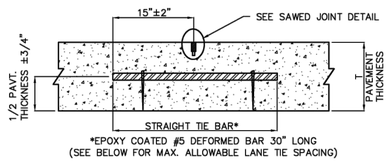

LONGITUDINAL LANE TIE JOINT (D)

MAX. ALLOWABLE LANE TIE SPACING JOINTS B AND D		TOTAL DISTANCE OF TIED JOINT FROM NEAREST FREE EDGE**
JOINT B GRADE 40	JOINT D GRADE 60	
2'-10"	3'-7"	12' OR LESS
1'-11"	2'-7"	OVER 12' THROUGH 17'
1'-5"	1'-11"	OVER 17' THROUGH 24'
1'-2"	1'-9"	OVER 24' THROUGH 28'
1'-2"	1'-4"	OVER 28' THROUGH 36'
1'-1"	1'-1"	36' OR GREATER***

** INCLUDES ANY TIED COMBINATION OF LANE WIDTH, VALLEY GUTTER, CURB & GUTTER, OR SHOULDER.

*** FOR WIDTHS GREATER THAN 48' USE #6 DEFORMED BARS AT 1'-2" SPACING.

MAXIMUM ALLOWABLE LANE TIE SPACING

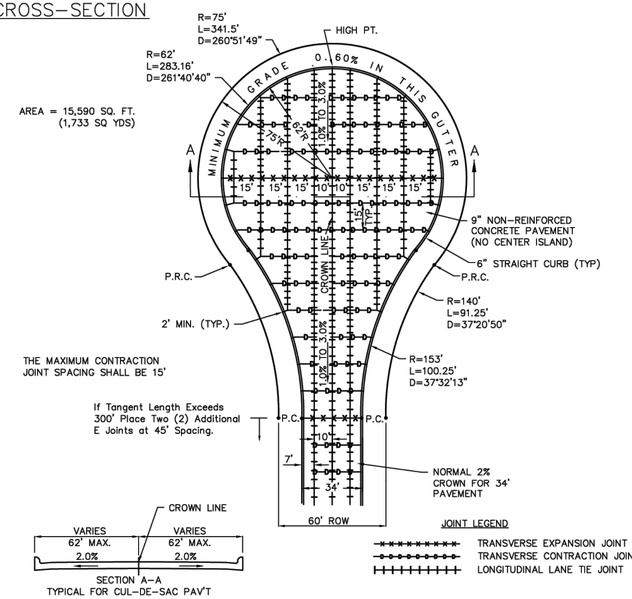

INDUSTRIAL ROAD CUL-DE-SAC JOINT LAYOUT DETAIL

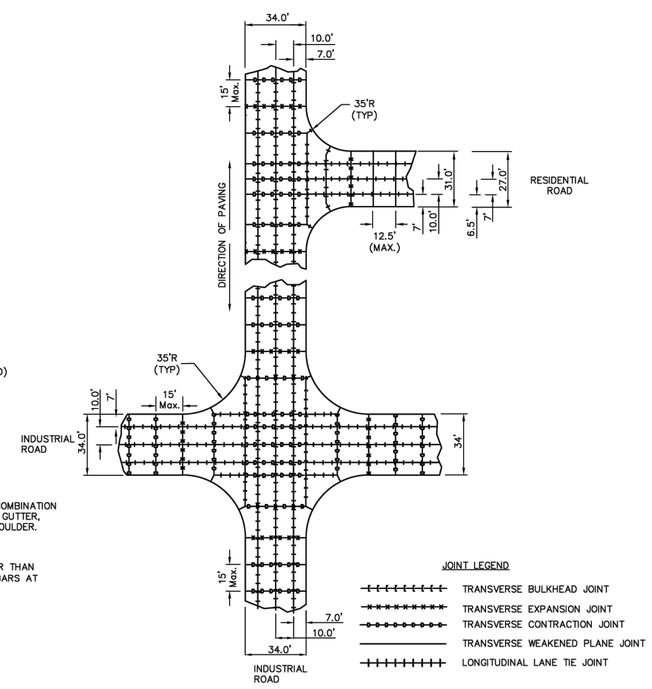

TYPICAL INTERSECTION JOINT LAYOUT DETAILS

1. ALL MATERIALS AND WORKMANSHIP SHALL BE IN ACCORDANCE WITH CITY OF LIVONIA SPECIFICATIONS WHICH ARE DEFINED AS THE CURRENT MICHIGAN DEPARTMENT OF TRANSPORTATION (MDOT) STANDARD SPECIFICATIONS FOR CONSTRUCTION AS MODIFIED BY THE CITY ENGINEER.
2. A TRANSVERSE END OF POUR JOINT, SYMBOL (H) SHALL BE CONSTRUCTED WHEN THERE IS AN INTERRUPTION IN CONCRETE PAVING FOR MORE THAN 1/2 HOUR. TRANSVERSE END OF POUR JOINT, SYMBOL (H), SHALL BE CONSTRUCTED IN ACCORDANCE WITH CURRENT MDOT STANDARD PLAN, R-39 SERIES. (PLAIN CONCRETE PAVEMENT) THIS NOTE APPLIES TO BOTH CONCRETE BASE AND FINISHED CONCRETE PAVEMENT.
3. TRANSVERSE END OF POUR JOINT (H) PLASTIC TUBE METHOD SHALL BE USED AT THE END OF THE DAYS POUR OR WHEN THERE IS AN UNAVOIDABLE INTERRUPTION OF THE WORK FOR MORE THAN 1/2 HOUR AND LESS THAN 7 DAYS.
4. A TRANSVERSE END OF POUR JOINT (H) DRILLED IN METHOD SHALL BE USED WHEN IT IS ANTICIPATED THAT THE SECOND POUR WILL BE DELAYED FOR 7 DAYS OR LONGER.
5. WHEN IT IS ANTICIPATED THAT CONSTRUCTION TRAFFIC WILL BE USING THE PAVEMENT, ENDINGS WILL BE PROTECTED BY MEANS OF A TEMPORARY CONCRETE HEADER.
6. EXISTING CONCRETE PAVEMENTS WITH HMA SURFACE REQUIRING SAW-CUTTING FOR REMOVAL SHALL HAVE THE SAW CUTS EXTEND COMPLETELY THRU THE CONCRETE PAVEMENT. SAWED OVER-CUTS OCCURRING IN ADJACENT SLAB, GUTTER, OR SHOULDER, WHICH WILL REMAIN IN PLACE SHALL BE SEALED.
7. ALL CONCRETE SHALL BE M.D.O.T. MIX P1, WITH A 28 DAY COMPRESSIVE STRENGTH OF AT LEAST 3500 P.S.I. A MINIMUM CEMENT CONTENT OF 5.6 SACKS WITH WATER REDUCING AGENT OR 6 SACK. AIR ENTRAINMENT AT PLACEMENT SHALL BE 5% – 8% BY VOLUME, AND A SLUMP OF NOT MORE THAN 3-1/2" AND NOT LESS THAN 1-1/2".
8. INDUSTRIAL STREET PAVEMENTS SHALL BE 34' WIDE (BACK OF CURB TO BACK OF CURB) AND SHALL BE CONSTRUCTED OF 9" UNIFORM CONCRETE WITH A 6" INTEGRAL STRAIGHT CURB, EXCEPT WHERE OTHERWISE SHOWN ON PLANS. ALL INTERSECTIONS SHALL HAVE A RADII OF 35 FEET AND BE CONSTRUCTED OF 10" UNIFORM CONCRETE.
9. ELEVATIONS SHOWN ON THE PAVING PLAN ARE PROPOSED TOP OF CURB GRADES BASED ON THE CURRENT WAYNE COUNTY DATUM (U.S.G.S. DATUM).

GENERAL NOTES

Industrial Road Concrete Pavement

JOB No. Conc-3

REVISIONS:	REV. DATE
Review Update	3/2012
6" Integral Curb, 27' Pavement Details	1/2013

DATE: 2/25/11
SHEET 2 OF 3
CADD: dwl
ENG: dwl
PM: tz
TECH:
Concrete Paving Details.dwg
FB#:

2

CITY OF LIVONIA
Department of Public Works – Engineering Division
33000 Civic Center Drive
Livonia, Michigan 48154
(734) 466-2570 Office, (734) 466-2195 Fax

RELEASED FOR :	DATE

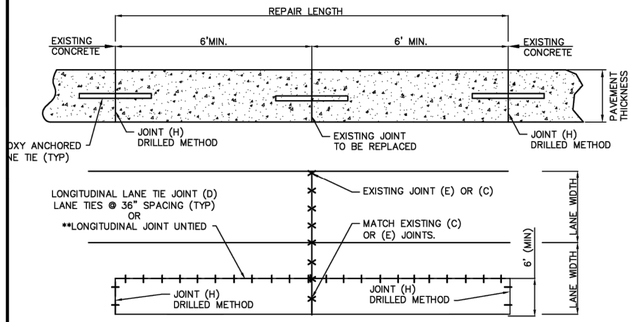

PAVEMENT REMOVAL SHALL BE IN ACCORDANCE WITH CURRENT MDOT STANDARD SPECIFICATIONS FOR CONSTRUCTION.

THIS DETAIL IS FOR FINISHED CONCRETE REPAIRS ON CITY OF LIVONIA TRUCK ROUTE ROADS, AND INDUSTRIAL SUBDIVISIONS.

PAVEMENT THICKNESS SHALL MATCH THE EXISTING PAVEMENT THICKNESS WITH A MINIMUM SECTION OF 9 INCHES OF NON-REINFORCED CONCRETE. IF CONCRETE PAVEMENT HAS BEEN RESURFACED WITH HMA PAVEMENT THEN THE REPLACEMENT CONCRETE SHALL BE INSTALLED TO THE FINISHED HMA SURFACE, UNLESS OTHERWISE DIRECTED BY THE CITY ENGINEER.

SEE CITY OF LIVONIA CONCRETE PAVEMENT JOINT DETAIL SHEET CONC-2 FOR JOINT DETAILS.

THE MINIMUM PATCH SIZE SHALL BE 6' X 6' WITH NO LESS THAN 6 FEET REMAINING TO ANY PAVEMENT JOINTS, EDGE OF PAVEMENT, OR CURB. (NOTE, IF THE DISTANCE BETWEEN THE FACE OF CURB AND THE PAVEMENT JOINT IS LESS THAN 6 FEET, THE CURB SHALL BE REMOVED AND REPLACED)

SAWCUT MUST EXTEND COMPLETELY THROUGH THE PAVEMENT SECTION. ANY OVER-CUTS EXCEPT AT THE OUTSIDE CORNERS OF THE PAVEMENT PATCH WILL BE REQUIRED TO BE REMOVED. (THIS WILL INCREASE THE SIZE OF THE PATCH)

ALL SAWED OVER-CUTS LOCATED AT THE OUTSIDE CORNERS OF THE PATCH LOCATION SHALL BE CLEANED AND SEALED WITH HOT-POURED RUBBER ASHPALT.

**WHEN CONSTRUCTING A LONGITUDINAL UNTIED JOINT APPLY A HEAVY COAT OF WHITE CURING COMPOUND ALONG THE EXISTING PAVEMENT VERTICAL EDGE TO PROVIDE A BOND BREAKER. IF VERTICAL EDGE IS NOT SMOOTH FROM SAW CUTTING, ADDITIONAL SURFACE GRINDING MAY BE REQUIRED. THE LONGITUDINAL JOINT UNTIED METHOD IS TO USED ONLY WHEN AN ADJACENT LANE IS LEFT OPEN TO TRAFFIC DURING CONSTRUCTION. THIS IS TO PREVENT VIBRATIONS FROM BEING TRANSMITTED INTO THE NEW PAVEMENT. LONGITUDINAL UNTIED JOINTS ARE ONLY TO BE USED AT THE DIRECTION OF THE ENGINEER.

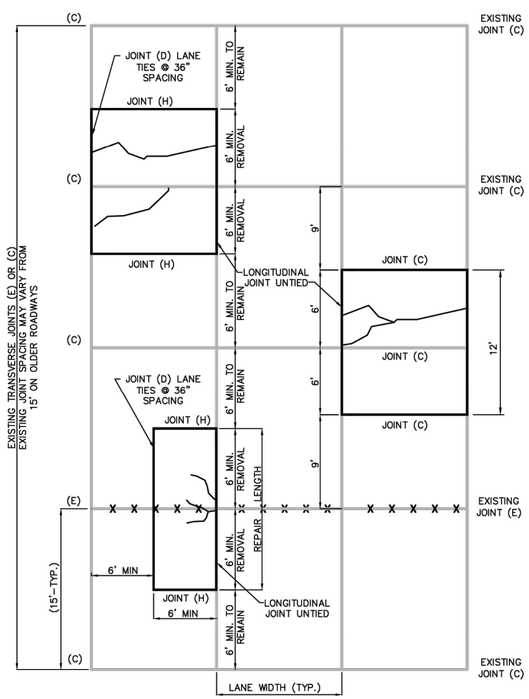

CITY OF LIVONIA TRUCK ROUTE AND INDUSTRIAL SUBDIVISION ROADS

PAVEMENT REMOVAL AND REPAIR (PATCHING)

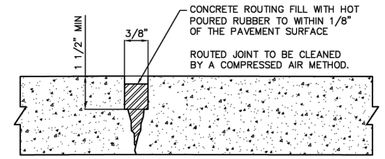

THIS DETAIL SHALL ONLY BE UTILIZED AS DETERMINED BY THE ENGINEER IN LIEU OF PAVEMENT REMOVAL.

CONCRETE ROUTING

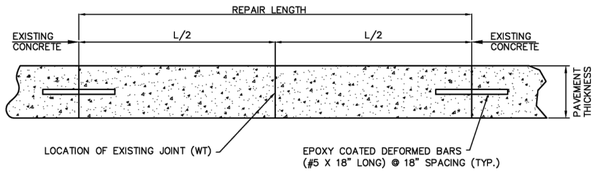

PAVEMENT REMOVAL SHALL BE IN ACCORDANCE WITH CURRENT MDOT STANDARD SPECIFICATIONS FOR CONSTRUCTION.

THIS DETAIL IS FOR FINISHED CONRETE PAVEMENT REPAIR ON LIVONIA RESIDENTIAL ROADS. (TYPICALLY CONSTRUCTED WITH 7" NON-REINFORCED PAVEMENT)

PAVEMENT THICKNESS SHALL BE 7" NON-REINFORCED CONCRETE.

SEE CITY OF LIVONIA CONCRETE PAVEMENT JOINT DETAIL SHEET CONC-1 FOR JOINT DETAILS.

THE MINIMUM PATCH SIZE SHALL BE 6'X6' WITH NO LESS THAN 6' REMAINING TO ANY PAVEMENT JOINTS, EDGE OF PAVEMENT, OR TO THE FACE OF CURB. (NOTE, IF THE DISTANCE BETWEEN THE FACE OF CURB AND THE PAVEMENT JOINT IS LESS THAN 6 FEET, THE CURB SHALL BE REMOVED AND REPLACED)

SAWCUT MUST EXTEND COMPLETELY THROUGH THE PAVEMENT SECTION. ANY OVER-CUTS EXPECTED AT THE OUTSIDE CORNERS OF THE PAVEMENT WILL BE REQUIRED TO BE REMOVED. (THIS WILL INCREASE THE SIZE OF THE PATCH)

ALL SAWED OVER-CUTS LOCATED AT THE OUTSIDE CORNERS OF THE PATCH LOCATION SHALL BE CLEANED AND SEALED WITH HOT POURED RUBBER ASPHALT.

WHEN CONSTRUCTING A LONGITUDINAL UNTIED JOINT APPLY A HEAVY COAT OF WHITE CURING COMPOUND ALONG THE EXISTING PAVEMENT VERTICAL EDGE TO PROVIDE A BOND BREAKER. IF VERTICAL EDGE IS NOT SMOOTH FROM SAW CUTTING, ADDITIONAL SURFACE GRINDING MAY BE REQUIRED. THE LONGITUDINAL JOINT UNTIED METHOD IS TO USED ONLY WHEN AN ADJACENT LANE IS LEFT OPEN TO TRAFFIC DURING CONSTRUCTION. THIS IS TO PREVENT VIBRATIONS FROM BEING TRANSMITTED INTO THE NEW PAVEMENT. LONGITUDINAL UNTIED JOINTS ARE ONLY TO BE USED AT THE DIRECTION OF THE ENGINEER.

**TRANSVERSE JOINTS LOCATED AT END OF PATCH SHALL BE CONSTRUCTED WITH EPOXY COATED DEFORMED LANE BARS (#5 X 18" LONG) @ 18" SPACING.

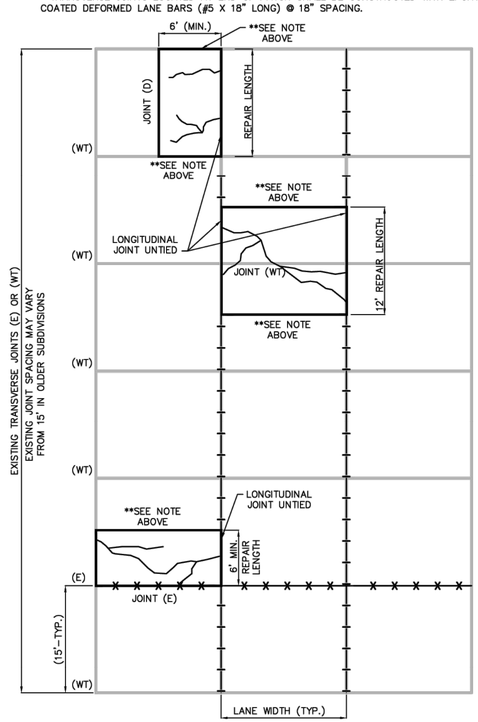

RESIDENTIAL 7" NON-REINFORCED ROAD

PAVEMENT REMOVAL AND REPAIR (PATCHING)

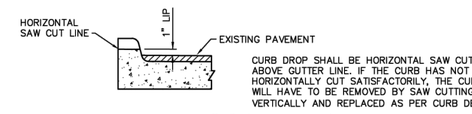

CURB DETAIL "A" (CURB CUT)

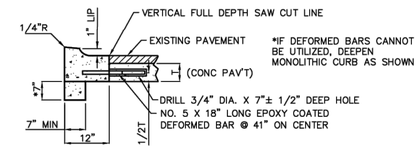

CURB DETAIL "B" (CURB REPLACEMENT W/ DROP)

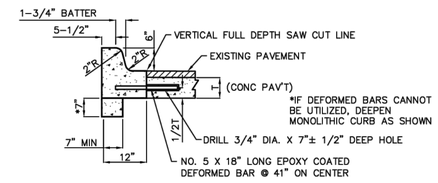

CURB DETAIL "C" (CURB REPLACEMENT)

REPLACEMENT CURB DETAILS

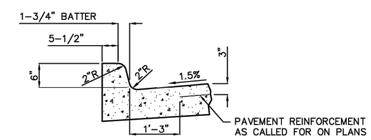

CONCRETE PAVEMENT

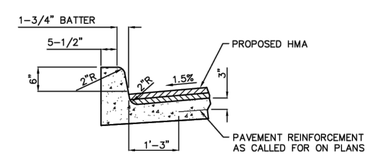

CONCRETE BASE COURSE

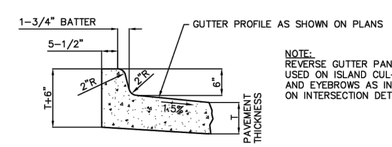

NOTE:
REVERSE GUTTER PAN TO BE USED ON ISLAND CUL-DE-SACS AND EYEBROWS AS INDICATED ON INTERSECTION DETAILS.

STRAIGHT CURB W/ REVERSE GUTTER PAN

ALL TRANSVERSE JOINTS IN THE CONCRETE PAVEMENT SHALL EXTEND ENTIRELY THROUGH THE INTEGRAL CURB AND BE OF THE SAME KIND AND THICKNESS AS PROVIDED FOR THE PAVEMENT.

THE JOINT MATERIAL SHALL BE PRE-CUT SO AS TO CONFORM TO THE GEOMETRIC SHAPE AND CROSS SECTIONAL AREA OF THE CURB, AND SHALL BE PLACED IN CONTACT WITH THE FILLER MATERIAL IN THE PAVEMENT.

INTEGRAL CURBS WHICH ARE PLACED AS PART OF A CONCRETE BASE COURSE PAVEMENT SHALL HAVE TRANSVERSE PLANE OF WEAKNESS JOINTS, FORMED BY PLACING A PRE-MOLDED BITUMINOUS FILLER 1/4 INCH THICK, ENTIRELY THROUGH THE CURB IN EXACT ALIGNMENT WITH ALL JOINTS IN THE BASE COURSE PAVEMENT. THE JOINT MATERIAL SHALL BE PRE-CUT SO AS TO CONFORM TO THE GEOMETRIC SHAPE AND CROSS SECTIONAL AREA OF THE CURB.

THE EDGES OF ALL TRANSVERSE JOINTS IN THE INTEGRAL CURB SHALL BE ROUNDED WITH AN APPROVED FINISHING TOOL HAVING A RADIUS OF 1/4 INCH.

INTEGRAL CURB DETAILS

1. ALL MATERIALS AND WORKMANSHIP FOR CONCRETE PAVEMENT CONSTRUCTION SHALL BE IN ACCORDANCE WITH THE CURRENT MICHIGAN DEPARTMENT OF TRANSPORTATION (M.D.O.T.) STANDARD SPECIFICATIONS FOR CONSTRUCTION AS MODIFIED BY THE CITY ENGINEER.
2. WHEN CONCRETE PAVEMENT REPAIRS ARE LONGER THAN 20 FEET, TRANSVERSE PLANE OF WEAKNESS JOINTS (WT) SHALL BE PLACED IN-LINE WITH EXISTING TRANSVERSE JOINTS, WORKING CRACKS, OR AT 15 FEET MAXIMUM (12.5 FEET RESIDENTIAL) AND 6 FEET MINIMUM SPACINGS.
3. EXISTING CONCRETE PAVEMENTS WITH HMA SURFACE REQUIRING SAW-CUTTING FOR REMOVAL SHALL HAVE THE SAW CUTS EXTEND COMPLETELY THRU THE CONCRETE PAVEMENT. SAWED OVER-CUTS OCCURING IN ADJACENT SLAB, GUTTER, OR SHOULDER, WHICH WILL REMAIN IN PLACE SHALL BE SEALED.

CONCRETE PAVEMENT REPAIR NOTES

REMOVE SIDEWALK AS NECESSARY: IF THE REMAINING ADJACENT SIDEWALK FLAG IS LESS THAN 4 FEET IN LENGTH, IT SHALL BE REMOVED ALONG WITH ADDITIONAL FLAGS TO ACCOMMODATE A MINIMUM 4 FOOT FLAG DIMENSION. THESE FLAGS SHALL BE REPLACED AS 4 INCH CONC.

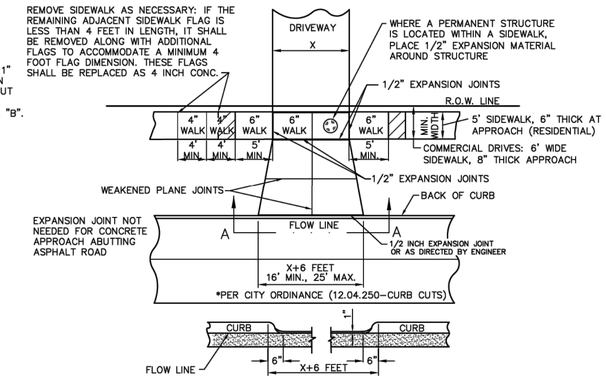

SECTION A-A
NOT TO SCALE

NOTES:

CURB DROP SHALL BE A HORIZONTAL SAW CUT AT 1 INCH ABOVE GUTTER LINE.

RESIDENTIAL APPROACH:
CONSTRUCT DRIVE APPROACH WITH 6 INCH NON-REINFORCED CONCRETE ON SUITABLE BASE OR 2 INCH HOT MIXED ASPHALT (HMA) ON A 6 INCH 21 AA LIMESTONE BASE, OR 6 INCH HMA (MIN. TWO LIFTS) ON SUITABLE BASE.

AT ALL CONCRETE DRIVES PLACE A 1/2 INCH EXPANSION JOINT AT BACK OF CURB AND 1/2 INCH EXPANSION JOINT AT FACE OF SIDEWALK OR RIGHT OF WAY LINE. MAINTAIN NORMAL SIDEWALK GRADE ACROSS DRIVE, NOT TO EXCEED 2.0 PERCENT CROSS SLOPE UP FROM FACE OF SIDEWALK.

*IF CURB CUTS EXCEEDS 25', PRIOR APPROVAL IS NEEDED.

IF STAMPED CONCRETE OR BRICK PAVERS ARE INSTALLED, THE PROPERTY OWNER ASSUMES ALL LIABILITY FOR MAINTENANCE. THE CITY WILL NOT REPLACE OR REPAIR STAMPED CONCRETE OR BRICK PAVERS WITH SAME DUE TO WATER MAIN BREAKS OR OTHER UTILITY WORK.

RESIDENTIAL DRIVE APPROACH DETAIL

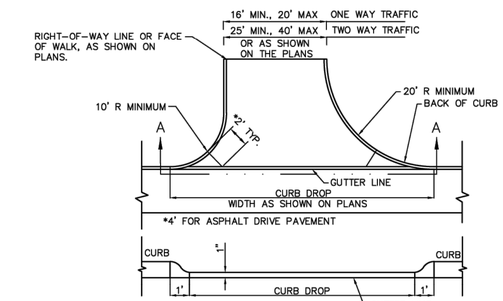

SECTION A-A
NOT TO SCALE

NOTES:

1. CONSTRUCT THE DRIVE APPROACH WITH 8" NON-REINFORCED CONCRETE ON 6" OF 21AA AGGREGATE BASE COURSE COMPACTED IN PLACE (CIP) OR 6" HMA ON 9" OF 21AA AGGREGATE BASE COURSE. (CIP)
2. CURBS SHALL BE CONSTRUCTED WITH HEIGHT VARYING FROM 6" AT BACK OF CURB TO 0" HEIGHT AT FACE OF SIDEWALK OR RIGHT-OF-WAY LINE.
3. AT ALL CONCRETE DRIVES, PLACE A 1" EXPANSION JOINT AT BACK OF CURB AND 1/2" EXPANSION JOINT AT FACE OF SIDEWALK OR RIGHT-OF-WAY LINE.
4. MAINTAIN NORMAL SIDEWALK GRADE ACROSS DRIVE, 2% SLOPE UP FROM FACE OF SIDEWALK. INBOUND OR OUTBOUND RADIUS SHALL BE REDUCED TO 5' FOR ONE-WAY TRAFFIC DRIVE APPROACH.
5. DRIVE APPROACH SHALL NOT ENCROACH ACROSS PROPERTY LINE EXTENDED WITHOUT WRITTEN APPROVAL FROM THE ADJOINING PROPERTY OWNER.

COMMERCIAL DRIVE APPROACH

Concrete Pavement Repair Details

JOB No. Conc-3	DATE: 2/25/11	
	SHEET 3 OF 3	3
REVISIONS:	REV. DATE	
Review Update	3/2012	CADD: dwl
		ENG: dwl
		PM: tz
		TECH:
		Concrete Paving Details.dwg
		FB#:

CITY OF LIVONIA
Department of Public Works - Engineering Division
33000 Civic Center Drive
Livonia, Michigan 48154
(734) 466-2570 Office, (734) 466-2195 Fax

RELEASED FOR:	DATE

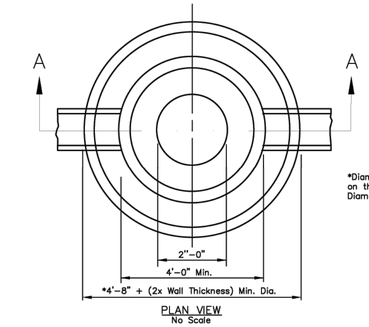

NOTE: M.H. "A" SHALL BE USED FOR MANHOLES STRUCTURES ON ALL STORMS SEWERS WHERE THE DIAMETER OF OUTLET PIPE IS 24" AND SMALLER UNLESS CALLED FOR OTHERWISE ON THE PLANS.

*Diameter of Manhole Shall be Increased as Shown on the Plans or in the Proposal Depending on The Diameters and Angles of Sewers.

PLAN VIEW
No Scale

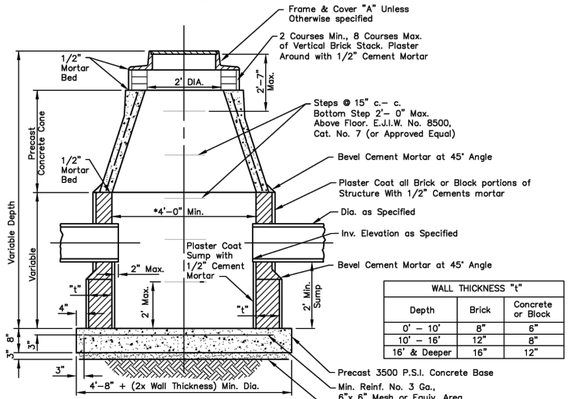

WALL THICKNESS "t"		
Depth	Brick	Concrete or Block
0' – 10'	8"	6"
10' – 16'	12"	8"
16' & Deeper	16"	12"

SECTION A–A
No Scale

MANHOLE "A"

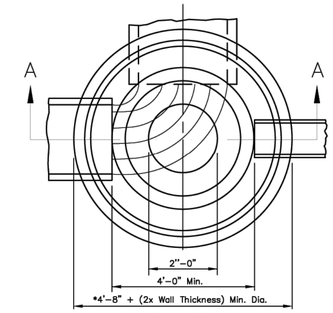

Block Wall Construction will Be Allowed Only When Authorized By The City Engineer.

NOTE: M.H. "B" SHALL BE USED FOR MANHOLES STRUCTURES ON ALL STORMS SEWERS WHERE THE DIAMETER OF OUTLET PIPE IS 27" AND LARGER, UNLESS CALLED FOR OTHERWISE ON THE PLANS.

*Diameter of Manhole Shall be Increased as Shown on the Plans or in the Proposal Depending on The Diameters and Angles of Sewers.

PLAN VIEW
No Scale

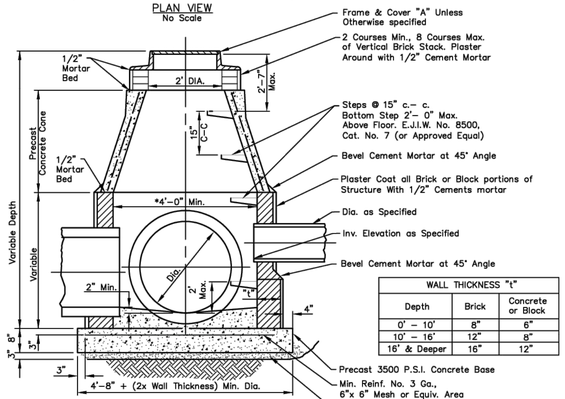

WALL THICKNESS "t"		
Depth	Brick	Concrete or Block
0' – 10'	8"	6"
10' – 16'	12"	8"
16' & Deeper	16"	12"

SECTION A–A
No Scale

MANHOLE "B"

NOTE: MANHOLE "C" SHALL BE USED FOR STRUCTURES ON ALL STORM SEWERS WHERE 48" OR LARGER DIA. PIPES INTERSECT.

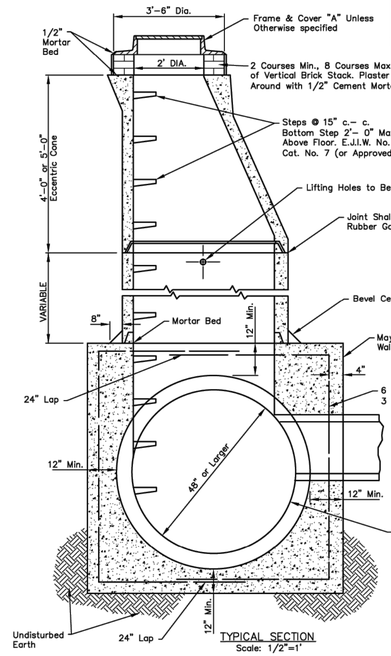

TYPICAL SECTION
Scale: 1/2"=1'

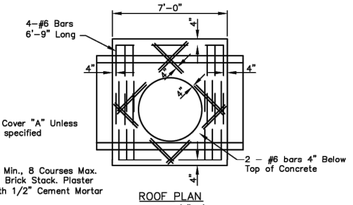

ROOF PLAN
Scale: 1/4"=1'

MANHOLE "C"

NOTE: MANHOLE "D" SHALL BE USED WHERE THE DEPTH OF COVER FROM THE TOP OF CASTING TO THE TOP OF SEWER IS LESS THEN 4'–0". MANHOLE "D" SHALL BE CONSTRUCTED WITH A 2' SUMP WHERE DIAMETER OF OUTLET SEWER IS 24" OR LESS

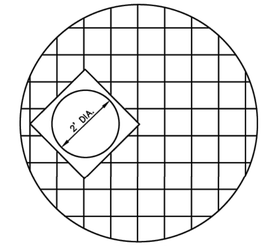

TOP SLAB

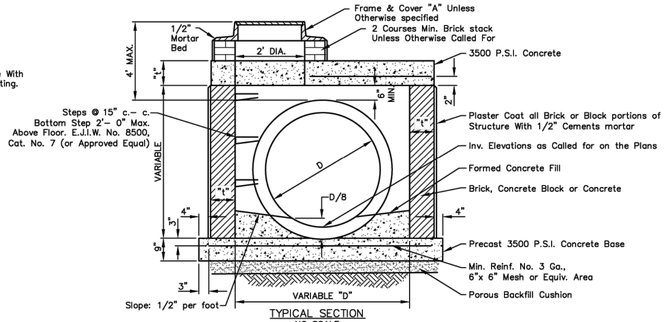

TYPICAL SECTION
NO SCALE

Outlet I.D.	M.H. D	Top Slab "t"	Walls "t"	Reinforcing Steel (Slab)
24" OR LESS	4'–0"	9"	8"	3/4" @ 9" (each way)
30"	4'–0"	9"	8"	3/4" @ 9" (each way)
36"	4'–0"	9"	12"	3/4" @ 9" (each way)
42"	5'–0"	10"	12"	3/4" @ 9" (each way)
48"/54"	6'–0"	11"	12"	7/8" @ 9" (each way)

M.H. D	Top Slab "t"	Walls "t"	Reinforcing Steel (Slab)
7'–0"	12"	12"	7/8" @ 9" (each way)
8'–0"	12"	12"	1" @ 9" (each way)

*Diameter Of Manhole Shall Be Increased As Shown On The Plans Or In The Proposal Depending On The Diameters And Angles of Sewers.

MANHOLE "D"

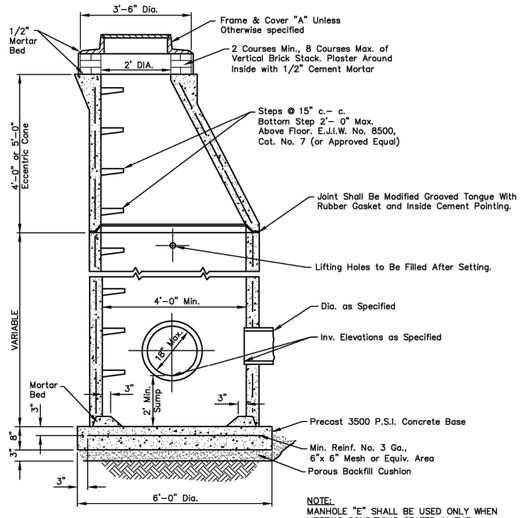

TYPICAL SECTION

NOTE: MANHOLE "E" SHALL BE USED ONLY WHEN MEETING CONDITIONS STATED IN THE "GENERAL MANHOLE NOTES", ITEM NO. 2(A).

Precast Units Shall Meet the Requirements Specified By A.S.T.M. C–478–68

PRECAST MANHOLE "E"
Scale: 1/2"=1'

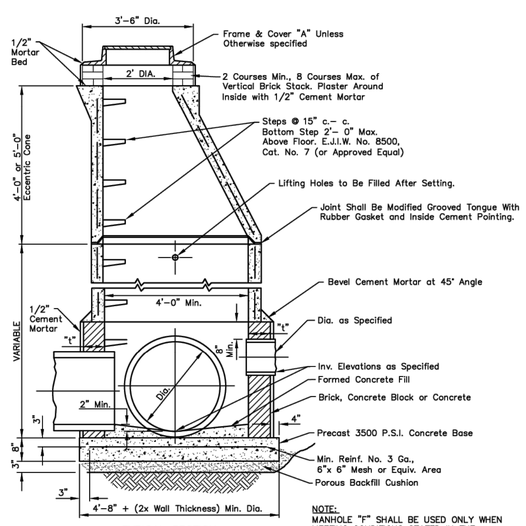

TYPICAL SECTION
Scale: 1/2"=1'

NOTE: MANHOLE "F" SHALL BE USED ONLY WHEN MEETING CONDITIONS STATED IN THE "GENERAL MANHOLE NOTES", ITEM NO. 2(B).

Precast Units Shall Meet the Requirements Specified By A.S.T.M. C–478–68

*Dia of M.H. Shall Be Increased as Shown on the Plans, or in the Proposal, Depending on the Diameters and Angles of the Sewers.

WALL THICKNESS "t"		
Depth	Brick	Concrete or Block
0' – 10'	8"	6"
10' – 16'	12"	8"
16' & Deeper	16"	12"

PRECAST MANHOLE "F"
Scale: 1/2"=1'

NOTE: MANHOLE "T" SHALL BE USED ONLY WHEN MEETING CONDITIONS STATED IN THE "GENERAL MANHOLE NOTES," ITEM 2.

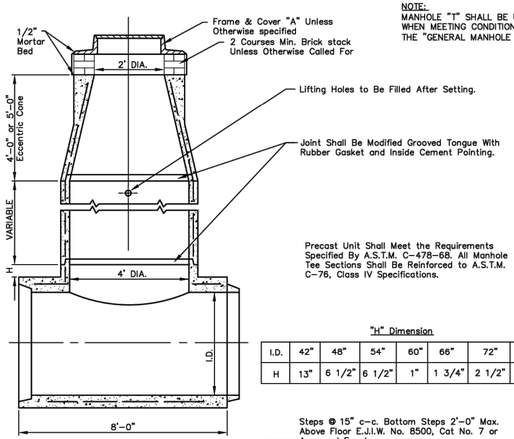

Precast Unit Shall Meet the Requirements Specified By A.S.T.M. C–478–68. All Manhole Tee Sections Shall Be Reinforced to A.S.T.M. C–76, Class IV Specifications.

"H" Dimension

I.D.	42"	48"	54"	60"	66"	72"	78"	84"	OVER 84"
H	13"	6 1/2"	6 1/2"	1"	1 3/4"	2 1/2"	4"	6"	7"

TYPICAL SECTION
No Scale

Steps @ 15" c–c. Bottom Steps 2'–0" Max. Above Floor E.J.I.W. No. 8500, Cat No. 7 or Approved Equal.

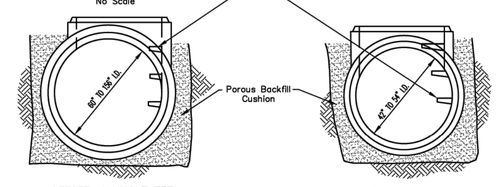

OFFSET MANHOLE TEE

CENTERED MANHOLE TEE

MANHOLE "T"

GENERAL MANHOLE NOTES:

1. ALL materials and workmanship shall be in accordance with the current standards and specifications set by the City of Livonia.
2. The Contractor shall construct Manholes with Precast Reinforced Concrete units ("E", "F" and "T") in lieu of Concrete, Brick and Block Manholes ("A" and "B"), in accordance with the following conditions.
   a. Maximum diameter of sewer outlet in any precast unit shall be 18" (Manhole "E" only).
   b. No openings shall be made in precast unit which would leave less then 24" of undisturbed precast pipe or would remove more then 30% of the circumference along any horizontal plane.
   c. Structures for sewers larger then 18" or those not meeting the opening requirements shall be built of block or brick up to a minimum of 8" above the top of Sewer, with precast units being used above this point. Where the precast units rest on the block or brick, the groove in the precast unit will be filled with mortar.
   d. Openings for the outlet sewer shall be precast with a diameter of 3 inches larger then the outside diameter of the outlet pipe. All other openings shall be made in the field after manhole has been constructed.
3. All vertical opening in concrete block structures walls shall be completely filled with mortar. All vertical wall joints shall be cement point.
4. A "Poured 3500 p.s.i. Concrete Base", without steel reinforcement, may be substituted for a precast base when approved by the City Engineer. A porous backfill cushion will not be required under the poured base, unless the Contractor has excavated below the required elevation at which time the Engineer will decide as to the merits of increasing the thickness of the concrete base or the use of a porous backfill cushion.
5. Where unstable ground conditions are encountered, slag or stone bedding shall be used as directed by the City Engineer in order to provide a stable foundation for pipe and manholes, cost to be included in the unit price for pipe.
6. All pipe entering or leaving a manhole shall be adequately supported by pouring 2500 p.s.i. concrete fill from undisturbed earth to spring line.
7. Wherever existing manholes or sewer pipe are to be tapped, drill holes at 4" center to center around periphery or opening to create a plane of weakness, before breaking section out.

Storm Sewer Manhole Standard Details

JOB No.	DATE: 02/1992	1
REVISIONS: REV. DATE	SHEET 1 OF 2	
Misc. Revisions 09/2007	CADD: dwl	
	ENG: dwl	
	PM: tz	
	TECH:	
	Storm Manhole Details.dwg	
	FB#:	

CITY OF LIVONIA
Department of Public Works – Engineering Division
33000 Civic Center Drive
Livonia, Michigan 48154
(734) 466–2570 Office, (734) 466–2195 Fax

RELEASED FOR :	DATE

A SOLID COVER SHALL BE PROVIDED IN LIEU OF THE PERFORATED COVER SHOWN, WHEN THE COVER IS LOCATED WITHIN THE SIDE WALK AREA.

MATERIAL:
GREY IRON, A.S.T.M. STD, SPEC. A48, CLASS 30.
BEARING SURFACES SHALL BE GROUND TO PREVENT ROCKING.
TOTAL WT. 410 LBS

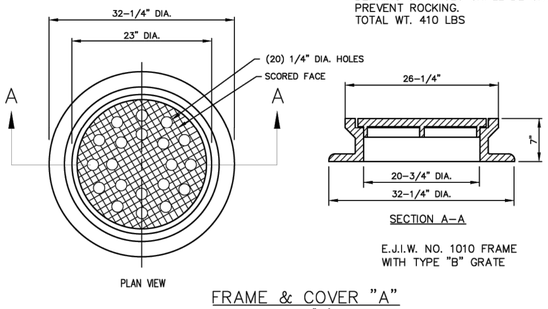

E.J.I.W. NO. 1010 FRAME WITH TYPE "B" GRATE

FRAME & COVER "A"
Scale: 1"=1'

A SOLID COVER SHALL BE PROVIDED IN LIEU OF THE TYPE "N" OVAL GRATE SHOWN, WHEN THE COVER IS LOCATED WITHIN A SIDEWALK AREA.

TYPICALLY USED IN LAWN AREAS

MATERIAL:
GREY IRON, A.S.T.M. STD, SPEC. A48, CLASS 30.
BEARING SURFACES SHALL BE GROUND TO PREVENT ROCKING.
TOTAL WT. 315 LBS

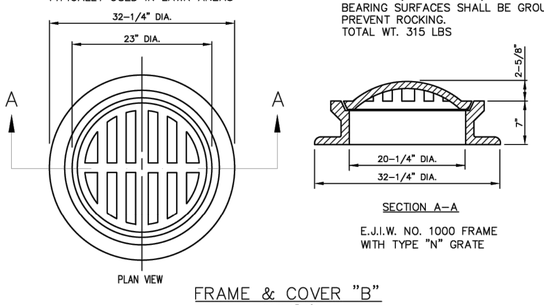

E.J.I.W. NO. 1000 FRAME WITH TYPE "N" GRATE

FRAME & COVER "B"
Scale: 1"=1'

TYPICALLY USED IN DITCH AREAS.

MATERIAL:
GREY IRON, A.S.T.M. STD, SPEC. A48, CLASS 30.
BEARING SURFACES SHALL BE GROUND TO PREVENT ROCKING.
TOTAL WT. 315 LBS

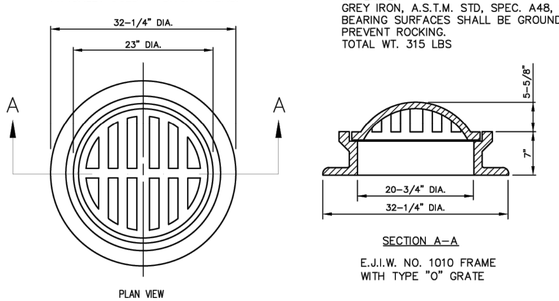

E.J.I.W. NO. 1010 FRAME WITH TYPE "O" GRATE

FRAME & COVER "C"
Scale: 1"=1'

MATERIAL:
GREY IRON, A.S.T.M. STD, SPEC. A48, CLASS 30.
BEARING SURFACES SHALL BE GROUND TO PREVENT ROCKING.
TOTAL WT. 315 LBS

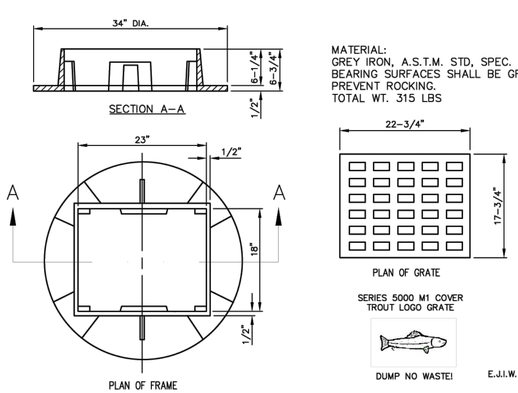

E.J.I.W. NO. 5080

FRAME & GRATE "D"
Scale: 1"=1'

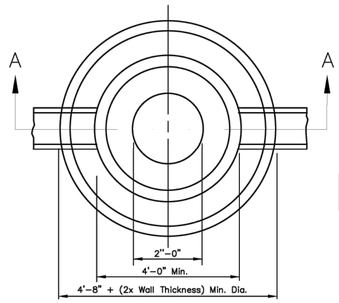

PLAN VIEW
No Scale

NOTE:
ALL VERTICAL HOLES IN CONCRETE BLOCK STRUCTURE WALLS SHALL BE COMPLETELY FILLED WITH MORTAR. ALL VERTICAL WALL JOINTS SHALL BE CEMENT POINTED.

Block Wall Construction will Be Allowed Only When Authorized By The City Engineer.

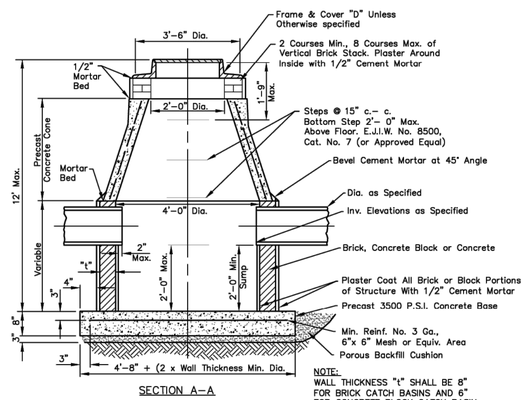

SECTION A-A

NOTE:
WALL THICKNESS "t" SHALL BE 8" FOR BRICK CATCH BASINS AND 6" FOR CONCRETE BLOCK CATCH BASIN.

STANDARD CATCH BASIN "A"
Scale: 1/2"=1'

NOTE:
STANDARD INLETS "A" AND "B" SHALL BE USED ONLY WHEN OUTLETTING TO A STRUCTURE HAVING A SUMP OR WHEN OUTLETTING TO A DITCH

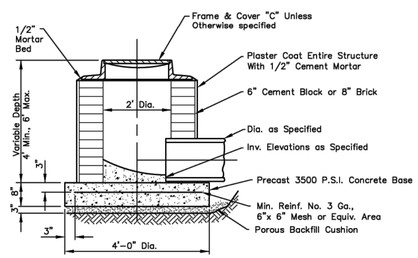

CROSS-SECTION

STANDARD INLET "A"
Scale: 1/2"=1'

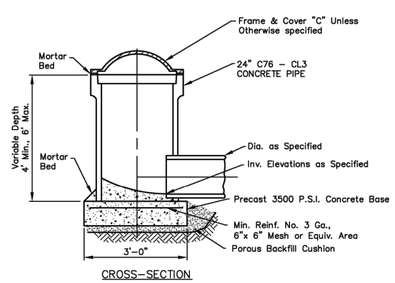

CROSS-SECTION

STANDARD INLET "B"
Scale: 1/2"=1'

NOTE:
NO OPENING SHALL BE MADE IN PRECAST UNITS WHICH WOULD LEAVE LESS THEN 24" OF UNDISTURBED PRECAST PIPE OR WOULD REMOVE MORE THEN 30% OF THE CIRCUMFERENCE ALONG ANY HORIZONTAL PLANE. IF THOSE REQUIREMENT CANNOT BE FOLLOWED, THE CATCH BASIN SHALL BE BUILT OF BRICK OR BLOCK WHEN APPROVED, TO A MINIMUM OF 8" ABOVE SUCH OPENINGS.

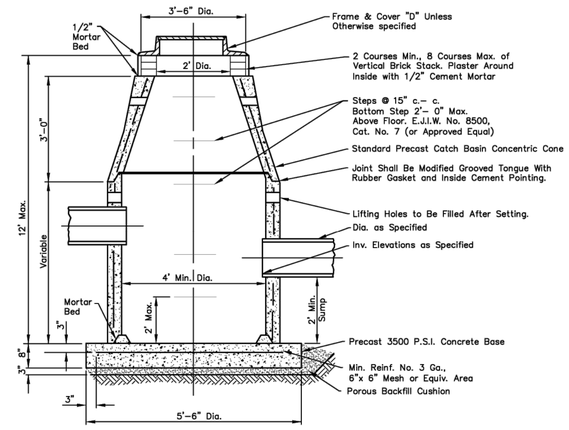

CROSS-SECTION

NOTE:
STRAIGHT PORTION OF CATCH BASIN MAY BE BUILT OUT OF BLOCK.

CATCH BASIN "B"
Scale: 1/2"=1'

NOTE:
WHERE EXCAVATION OCCURS UNDER OR WITHIN 3' OF EXISTING OR PROPOSED ROAD PAVEMENT, CURBS, DRIVEWAY OR SIDEWALK, ALL WORK SHALL BE DONE IN ACCORDANCE WITH THE SPECIFICATIONS OF THE CITY OF LIVONIA.

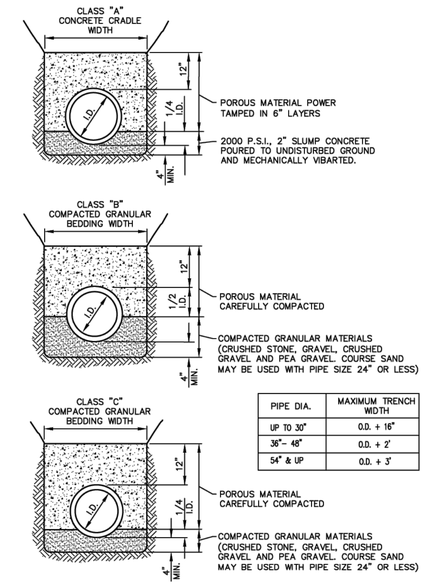

PIPE DIA.	MAXIMUM TRENCH WIDTH
UP TO 30"	O.D. + 16"
36"- 48"	O.D. + 2'
54" & UP	O.D. + 3'

PIPE BEDDING METHOD

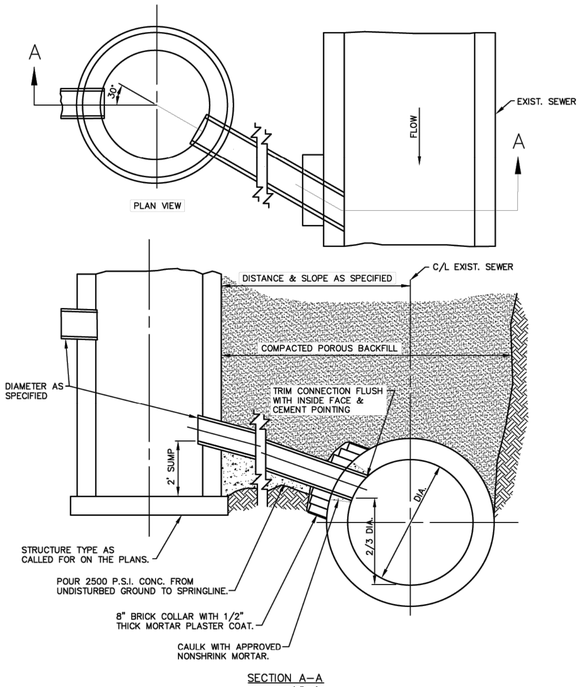

SECTION A-A
Scale: 3/8"=1'

SPECIAL CONNECTIONS TO EXISTING SEWERS

NOTE:
"BLIND TAP" STYLE OF PIPE CONNECTION ONLY TO BE USED WITH PERMISSION FROM THE CITY ENGINEER. FOR MAINTENANCE PURPOSES, MANHOLES ARE TO BE USED IF POSSIBLE.

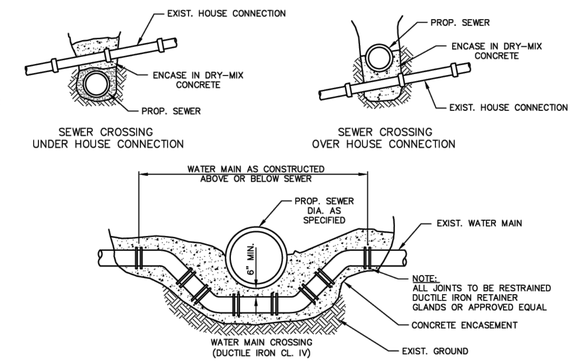

UTILITY CROSSINGS

Storm Sewer Details and Appurtenances

JOB No.

REVISIONS:	REV. DATE
Pipe Bedding Revisions	7/10/80
Frame & Cover "C" Revised	1/11/90
Michigan Trout Logo	10/28/02
Note Revisions	9/25/07
Blind Tap Note Addition	7/11/12

DATE: 02/1992
SHEET 2 OF 2
CADD: dwl
ENG: dwl
PM: tz
TECH:
Storm Manhole Details.dwg
FB#:

2

CITY OF LIVONIA
Department of Public Works - Engineering Division
33000 Civic Center Drive
Livonia, Michigan 48154
(734) 466-2570 Office, (734) 466-2195 Fax

RELEASED FOR :	DATE

MANHOLE RISERS AND CONES SHALL MEET THE REQUIREMENTS OF A.S.T.M. SPEC. C-478 EXCEPT THAT A WALL THICKNESS OF 5" WILL BE REQUIRED. LENGTH OF EACH RISER SHALL BE A MULTIPLE OF 16'. LENGTH OF CONE SHALL BE 2'-8" MIN. TWO LIFT HOLES WILL BE PERMITTED IN EACH UNIT. AND MUST BE FILLED WITH NON-SHRINK MORTAR AFTER SETTING MANHOLE.

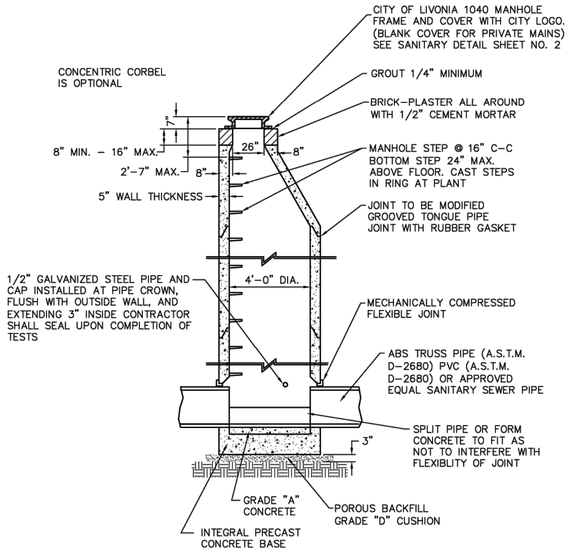

STANDARD MANHOLE FOR SEWERS 8" THROUGH 24"

MANHOLE RISERS AND CONES SHALL MEET THE REQUIREMENTS OF A.S.T.M. SPEC. C-478 EXCEPT THAT A WALL THICKNESS OF 5" WILL BE REQUIRED. LENGTH OF EACH RISER SHALL BE A MULTIPLE OF 16'. LENGTH OF CONE SHALL BE 2'-8" MIN. TWO LIFT HOLES WILL BE PERMITTED IN EACH UNIT. AND MUST BE FILLED WITH NON-SHRINK MORTAR AFTER SETTING MANHOLE.

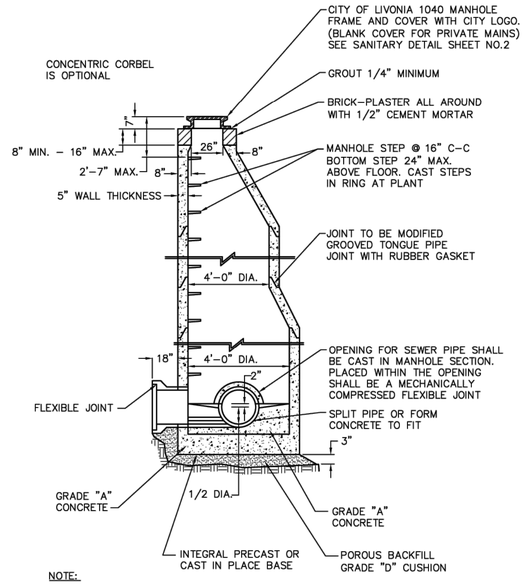

NOTE:

EXCAVATION SHALL EXTEND AROUND ENTIRE PERIMETER OF MANHOLE, SO THAT THE DIFFERENTIAL OF EXCAVATION AND OPPOSITE SIDES DOES NOT EXCEED 6 FEET

STANDARD MANHOLE FOR SEWERS 27" THROUGH 42"

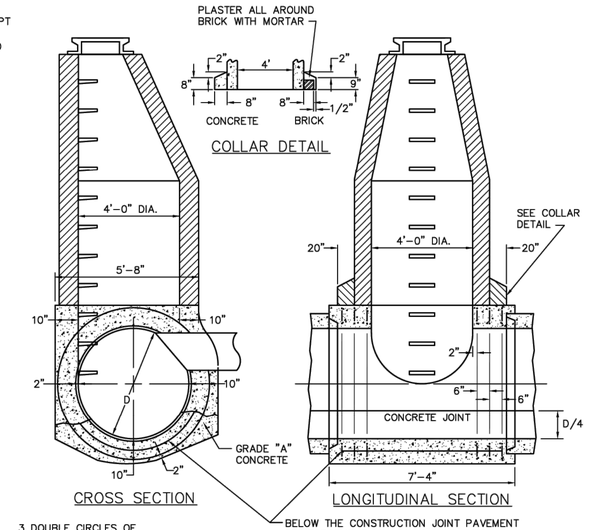

3 DOUBLE CIRCLES OF REINFORCING BARS EACH END (TOTAL 2 CIRCLES PER M.H.) SPLICE ABOVE CONTROL JOINT. SEE TABLE FOR BAR SIZE

OPTIONAL: USE PRECAST M.H. TEE CLASS IV MIN. CIRCULAR REINFORCEMENT (2 LINE REINFORCEMENT)

BELOW THE CONSTRUCTION JOINT PAVEMENT REINFORCEMENT (#4 GA. 4" X 4" MESH) SHALL BE PLACED FROM END TO END AT THE BARREL ON CENTERLINE OF RING

REINFORCEMENT		
DIA.	BAR DIA.	LAP AT SPLICES
48" - 60"	5/8"	20"
66" - 78"	3/4"	24"
84" - 96"	7/8"	28"
102" - 108"	1"	32"

STANDARD MANHOLE FOR SEWERS 48" AND LARGER

CITY OF LIVONIA STANDARD SANITARY NOTES:

1. No connections receiving storm water, surface water, or ground water shall be made to sanitary sewers.
2. Infiltration for any sections of sewers between manholes shall not exceed 100 gals/inch dia./mile/24 hours including all manholes and appurtenances.
3. No footing drains shall be connected to the building sewer.
4. Differential of excavation around existing manholes shall not exceed 6'.
5. All manholes and covers shall be in accordance with the current City of Livonia standards.
6. Air testing methods in accordance with current C826-90 standards for VCP pipe and ASTM F-1417 standard for PVC/ABS truss pipe shall be required prior to approval by the City of Livonia.
7. All sanitary sewer pipes shall be A.S.T.M. D2680 ABS or PVC composite (truss) pipe with cement solvent joints for ABS pipe or slip joints for the PVC Truss pipe.
8. A 6" ABS, PVC Schedule 40 or SDR 23.5 house lead shall be installed from the sanitary sewer to a point 5' inside the property line at a minimum of 1.00% grade.
9. Sanitary manholes shall be constructed in accordance with current City of Livonia standards.
10. Leads:
    a) A 4" diameter service line will be allowed for a tap into an existing 10" sanitary sewer main.
    b) Materials:
        i) ABS solid wall S.D.R. 23.5 conforming to ASTM D-2751 (SDR 23.5) Standard Specifications. Push on (ASTM D-3212) or solvent cemented (ASTM D-3034).
        ii) PVC solid wall S.D.R. 23.5 conforming to ASTM D-3034 (SDR 23.5) Standard Specifications. Push on (ASTM D-3212) or solvent cemented (ASTM D-3034).
        iii) ABS Schedule 40 pipe conforming to ASTM D-1527 Standard Specifications. Solvent Cemented joint (ASTM D-1527).
        iv) P.V.C. Schedule 40 pipe conforming to ASTM D-1785 Standard Specifications. Solvent cemented joint (ASTM D-1785).
    c) House connections shall not be tapped into manholes.
    d) Wyes shall be provided for each lot abutting sanitary sewers in easement.
    e) Risers shall be installed where necessary to have invert elevations of house connections at the property line 9' below the sidewalk, or property line grade.
11. Manholes are required at all dead ends, pipe intersections, and changes in pipe alignment, slope, and size.
12. Cleanouts are required at all sanitary leads bends, changes in direction, and at 100' increments.
13. Place a 6" service lead for each lot or parcel as shown on plan. For parcels in excess of 100' a wye must be placed every 100' unless otherwise noted.
14. Prior to backfilling of a service lead. A 4' length of ¼" diameter steel bar shall be placed from a point immediately in front of the service connection to 2' below the finish ground surface. Do not rest the marker on any portion of the service connection or stopper.
15. All stubs shall have a water tight bulkhead.
16. Pipe alignment must be set with a laser.
17. All existing sanitary leads that are reused must be air tested or videotaped.
18. Televising of pipes: video inspection shall be considered complete when all necessary construction repairs have been made and re-televised to verify that the repair is acceptable.
19. All sanitary sewer mains 8" diameter and larger shall be tested not less than 30 days after the trench backfill and compaction has been completed including air testing and deflection.
20. Testing shall be conducted on a manhole to manhole basis and shall be done after the line has been completely cleaned and flushed. Any portion of the sewer which fails to pass the test shall be excavated, repaired or realigned, and retested with TV, air, and deflection tests.
21. If a sewer fails to pass any of the previously described tests, the contractor shall determine the location of the leak, repair and retest the sewer. The test shall be repeated until satisfactory results are obtained.
22. Newly constructed, rehabilitated or adjusted sanitary manholes that are either public or private that touch or are in pavement areas such as sidewalks, roads, approaches, brick pavers, or stamped concrete shall have a manhole encapsulation installed to prevent water infiltration and providing support around the frame and block/concrete rings. The manhole encapsulation system shall be WrapidSeal or approved equal.

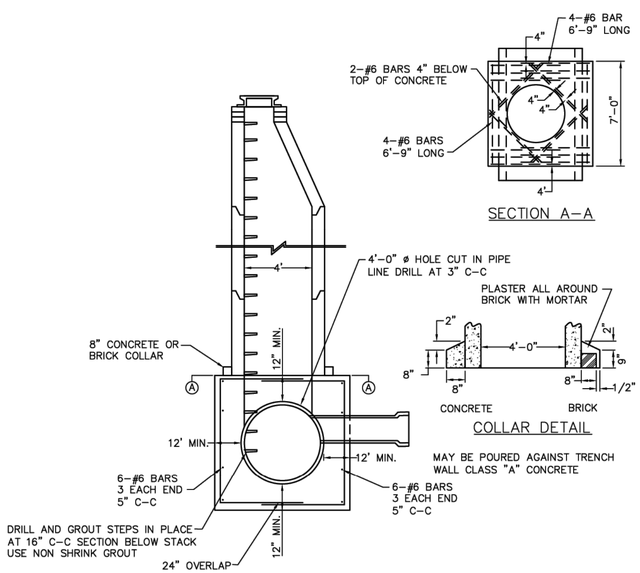

STANDARD MANHOLE FOR EXISTING SEWERS 48" AND LARGER

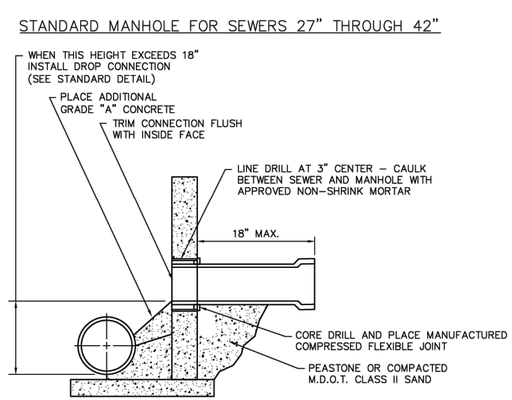

STANDARD CONNECTION TO EXISTING MANHOLE

NOTE:
DROP CONNECTION TO BE USED ONLY WHEN THE DIFFERENCE OF INVERTS EXCEEDS 18"

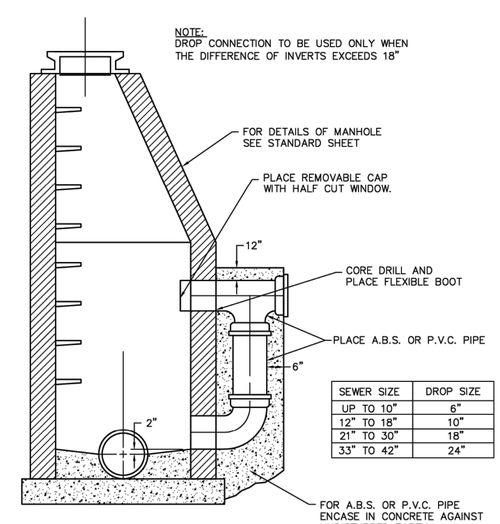

SEWER SIZE	DROP SIZE
UP TO 10"	6"
12" TO 18"	10"
21" TO 30"	18"
33" TO 42"	24"

STANDARD DROP CONNECTION AT MANHOLE

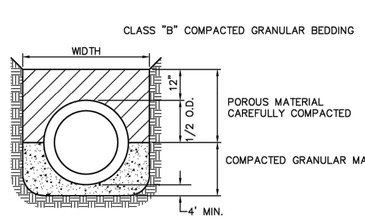

PIPE DIA.	MAXIMUM TRENCH WD.
4"-12"	30" MAX
15"-48"	O.D. + 12"
54"-78"	O.D. + 24"

TRENCH BEDDING AND BACKFILL METHOD

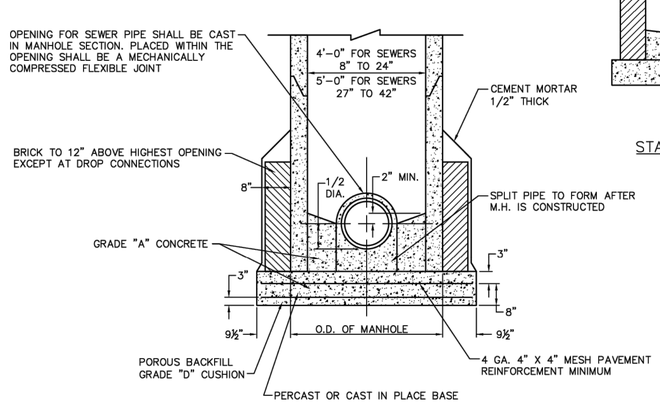

STANDARD MANHOLE FOR EXISTING SEWERS 8" THROUGH 42"

Sanitary Sewer Standard Details

JOB No.

REVISIONS:	REV. DATE
Building Laterals & Misc. Updates	1/23/00
WCD-3 Update	3/07/05
1040 Frame & Cover Detail	4/08/09
Misc. Notes Updated	2/19/10
Standard Note #22	6/03/11

DATE: 9/25/87
SHEET 1 OF 2
CADD: dwl
ENG: dwl
PM: tz
TECH:
Sanitary Sewer Detail Sheet
FB#:

1

CITY OF LIVONIA
Department of Public Works - Engineering Division
33000 Civic Center Drive
Livonia, Michigan 48154
(734) 466-2570 Office, (734) 466-2195 Fax

RELEASED FOR :	DATE

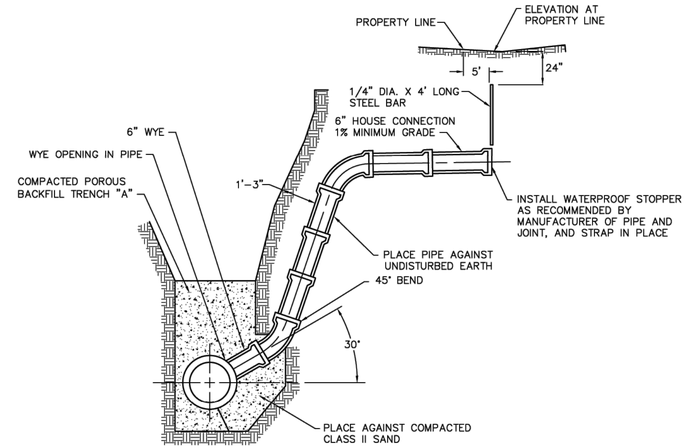

STANDARD BUILDING SEWER CONNECTION TO LATERAL OR TRUNK SEWERS

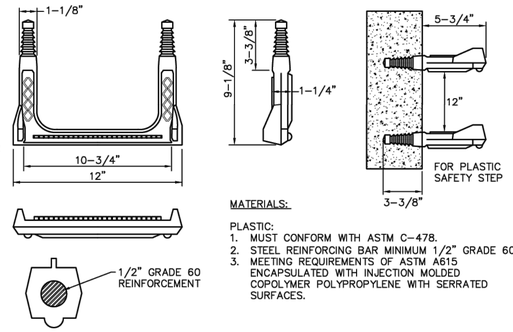

MATERIALS:

PLASTIC:
1. MUST CONFORM WITH ASTM C-478.
2. STEEL REINFORCING BAR MINIMUM 1/2" GRADE 60.
3. MEETING REQUIREMENTS OF ASTM A615 ENCAPSULATED WITH INJECTION MOLDED COPOLYMER POLYPROPYLENE WITH SERRATED SURFACES.

NOTE:

1. MANHOLE STEPS MUST BE TIGHT AND FIRMLY EMBEDDED.
2. ALL STEPS WITHIN A MANHOLE SHALL BE OF THE SAME DESIGN, TYPE, AND SIZE. MIXING UNMATCHED STEPS IS NOT PERMITTED.

MANHOLE STEP DETAIL

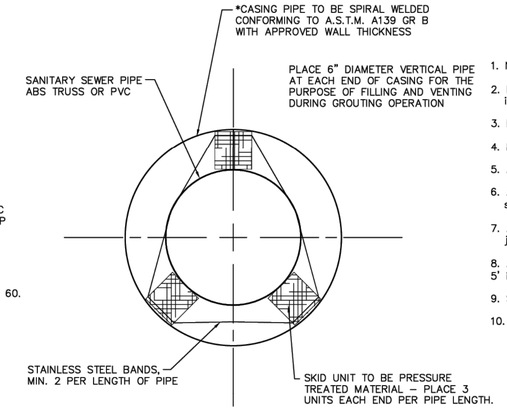

NOTE:

THE ANNULAR SPACE WITHIN THE CASING PIPE SHALL BE FILLED BY PUMPING A MIXTURE OF SAND, FLY ASH, AND WATER. THE TOP OF THE SANITARY SEWER SHALL NOT BE IN CONTACT WITH THE CASING PIPE.

*CASING PIPE DIAMETER TO BE MINIMUM OF 10" LARGER THAN SANITARY SEWER DIAMETER

SANITARY CASING PIPE DETAIL

CITY OF LIVONIA STANDARD SANITARY NOTES:

1. No connections receiving storm water, surface water, or ground water shall be made to sanitary sewers.
2. Infiltration for any sections of sewers between manholes shall not exceed 100 gals/inch dia./mile/24 hours including all manholes and appurtenances.
3. No footing drains shall be connected to the building sewer.
4. Differential of excavation around existing manholes shall not exceed 6'.
5. All manholes and covers shall be in accordance with the current City of Livonia standards.
6. Air testing methods in accordance with current C826-90 standards for VCP pipe and ASTM F-1417 standard for PVC/ABS truss pipe shall be required prior to approval by the City of Livonia.
7. All sanitary sewer pipes shall be A.S.T.M. D2680 ABS or PVC composite (truss) pipe with cement solvent joints for ABS pipe or slip joints for the PVC Truss pipe.
8. A 6" ABS, PVC Schedule 40 or SDR 23.5 house lead shall be installed from the sanitary sewer to a point 5' inside the property line at a minimum of 1.00% grade.
9. Sanitary manholes shall be constructed in accordance with current City of Livonia standards.
10. Leads:
    a) A 4" diameter service line will be allowed for a tap into an existing 10" sanitary sewer main.
    b) Materials:
        i) ABS solid wall S.D.R. 23.5 conforming to ASTM D-2751 (SDR 23.5) Standard Specifications. Push on (ASTM D-3212) or solvent cemented (ASTM D-3034).
        ii) PVC solid wall S.D.R. 23.5 conforming to ASTM D-3034 (SDR 23.5) Standard Specifications. Push on (ASTM D-3212) or solvent cemented (ASTM D-3034).
        iii) ABS Schedule 40 pipe conforming to ASTM D-1527 Standard Specifications. Solvent Cemented joint (ASTM D-1527).
        iv) P.V.C. Schedule 40 pipe conforming to ASTM D-1785 Standard Specifications. Solvent cemented joint (ASTM D-1785).
    c) House connections shall not be tapped into manholes.
    d) Wyes shall be provided for each lot abutting sanitary sewers in easement.
    e) Risers shall be installed where necessary to have invert elevations of house connections at the property line 9' below the sidewalk, or property line grade.
11. Manholes are required at all dead ends, pipe intersections, and changes in pipe alignment, slope, and size.
12. Cleanouts are required at all sanitary leads bends, changes in direction, and at 100' increments.
13. Place a 6" service lead for each lot or parcel as shown on plan. For parcels in excess of 100' a wye must be placed every 100' unless otherwise noted.
14. Prior to backfilling of a service lead. A 4' length of ¼" diameter steel bar shall be placed from a point immediately in front of the service connection to 2' below the finish ground surface. Do not rest the marker on any portion of the service connection or stopper.
15. All stubs shall have a water tight bulkhead.
16. Pipe alignment must be set with a laser.
17. All existing sanitary leads that are reused must be air tested or videotaped.
18. Televising of pipes: video inspection shall be considered complete when all necessary construction repairs have been made and re-televised to verify that the repair is acceptable.
19. All sanitary sewer mains 8" diameter and larger shall be tested not less than 30 days after the trench backfill and compaction has been completed including air testing and deflection.
20. Testing shall be conducted on a manhole to manhole basis and shall be done after the line has been completely cleaned and flushed. Any portion of the sewer which fails to pass the test shall be excavated, repaired or realigned, and retested with TV, air, and deflection tests.
21. If a sewer fails to pass any of the previously described tests, the contractor shall determine the location of the leak, repair and retest the sewer. The test shall be repeated until satisfactory results are obtained.
22. Newly constructed, rehabilitated or adjusted sanitary manholes that are either public or private that touch or are in pavement areas such as sidewalks, roads, approaches, brick pavers, or stamped concrete shall have a manhole encapsulation installed to prevent water infiltration and providing support around the frame and block/concrete rings. The manhole encapsulation system shall be WrapidSeal or approved equal.

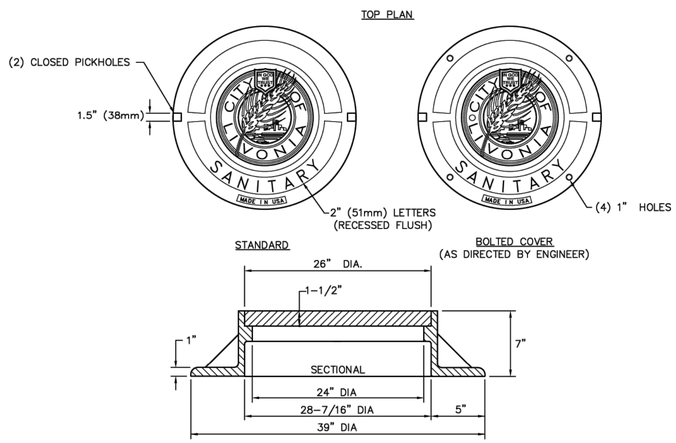

NOTE:
1. SANITARY MANHOLES WITHIN PRIMARY AND COLLECTOR ROADS, OR AS DIRECTED BY THE CITY ENGINEER, SHALL BE HINGED MANHOLE ASSEMBLY (24" ERGO, PRODUCT # 00104176L01)
2. MATERIAL SPECIFICATIONS COVER GRAY IRON, A.S.T.M. STD. SPEC. A-48, CL 35B BEARING SURFACE OF COVER AND FRAME SHALL BE GROUND TO PREVENT ROCKING. CASTING SHALL NOT BE COATED.
3. SANITARY MANHOLES ON PRIVATE MAINS SHALL HAVE COVERS THAT DO NOT INCLUDE ANY REFERENCE TO THE CITY OF LIVONIA.

1040 FRAME AND COVER DETAIL

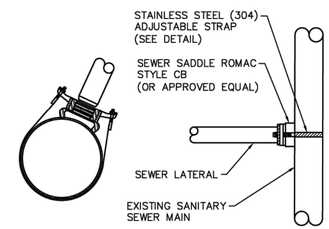

NOTE:
1. PIPE TO BE TAPPED USING A CORE DRILL OR APPROVED EQUAL.
2. NO SIZE ON SIZE TAPS.
3. A 4" DIAMETER SERVICE LINE WILL BE ALLOWED FOR A TAP INTO AN EXISTING 10" SANITARY SEWER MAIN.

NOTE:
1. BOLTS, NUTS AND WASHERS SHALL BE, 1/2" UNC ROLLED THREAD AND TEFLON COATED.
2. 3-1/2" WIDE BAND FOR SPREADING OUT CLAMP FORCE ON PIPE.
3. STAINLESS STEEL WELDS SHALL BE FULLY PASSIVATED.
4. EXCESS STRAP TO BE LOCATED BETWEEN PIPE AND BAND.

STAINLESS STEEL ADJUSTABLE STRAP

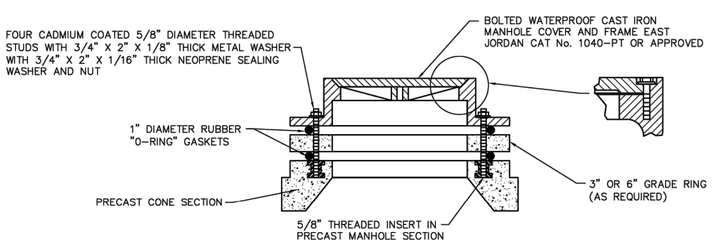

STANDARD PRESSURE M/H FRAME & COVER

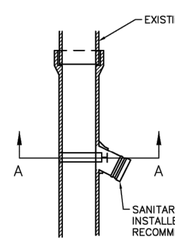

NOTES:
1. SADDLE CONNECTION , OR CUT-IN TEE, ALLOWED ONLY IF NO EXISTING WYE IS PROVIDED.
2. ALL SADDLES AND TEES MUST BE INSPECTED PRIOR TO BACKFILLING. THE HOLE IN THE EXISTING PIPE SHALL BE INSPECTED AND APPROVED PRIOR TO INSTALLATION OF SADDLE.
3. OTHER SADDLE TYPES MAY BE APPROVED ON A CASE-BY-CASE BASIS BY THE CITY ENGINEER.
4. NO SADDLES ARE TO BE INSTALLED ON CLAY OR CONCRETE MAINS WITHOUT PRIOR APPROVAL FORM THE CITY ENGINEER.
5. CUT-IN TEE CONNECTION MAY BE USED ONLY WITH APPROVAL FROM CITY ENGINEER.

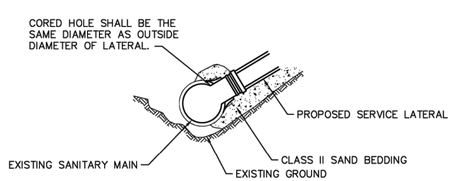

SECTION A-A

SANITARY SEWER SADDLE

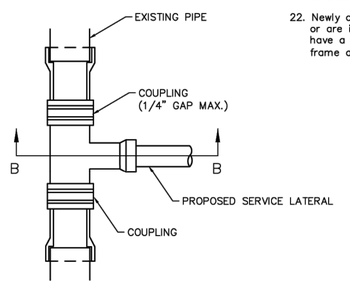

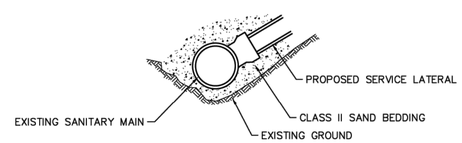

SECTION B-B

CUT-IN TEE

SANITARY SEWER TAP DETAILS

Sanitary Sewer Standard Details

JOB No.		DATE: 9/25/87	
		SHEET 2 OF 2	2
REVISIONS:	REV. DATE		
Building Laterals & Misc. Updates	1/23/00	CADD: dwl	
WCD-3 Update	3/07/05	ENG: dwl	
1040 Frame & Cover Detail	4/08/09	PM: tz	
Misc. Notes Updated	2/18/10	TECH:	
Standard Note #22	6/03/11	Sanitary Sewer Detail Sheet	
		FB#:	

CITY OF LIVONIA
Department of Public Works - Engineering Division
33000 Civic Center Drive
Livonia, Michigan 48154
(734) 466-2570 Office, (734) 466-2195 Fax

RELEASED FOR:	DATE

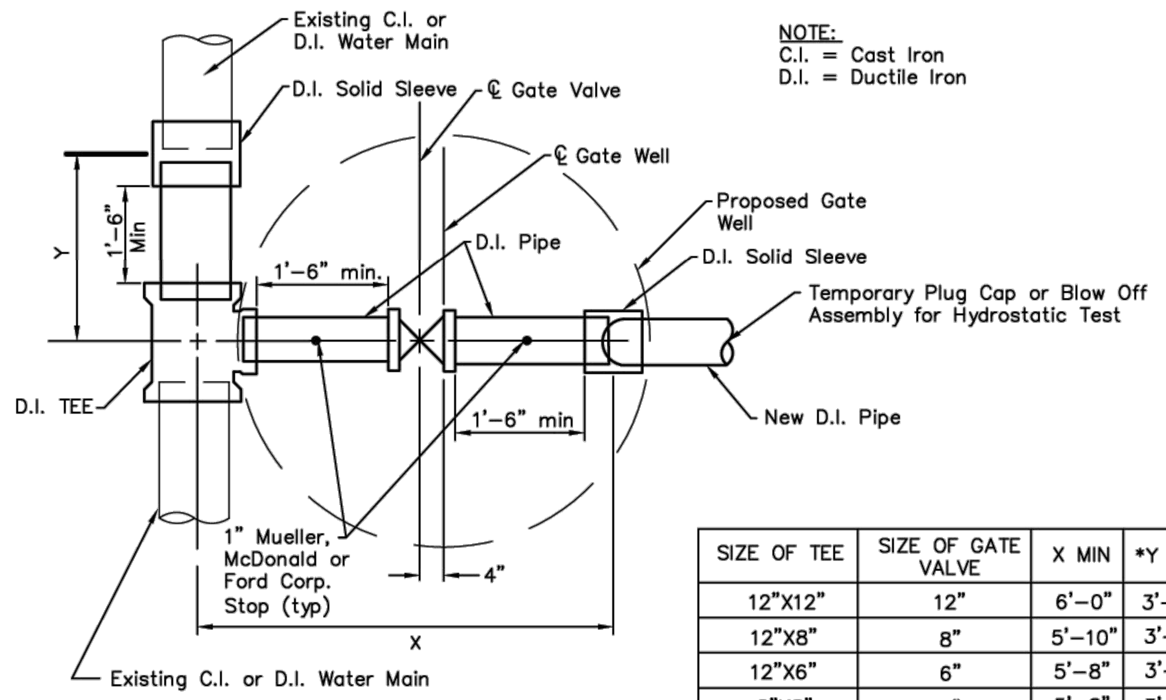

NOTE:
C.I. = Cast Iron
D.I. = Ductile Iron

SIZE OF TEE	SIZE OF GATE VALVE	X MIN	*Y MIN
12"X12"	12"	6'–0"	3'–3"
12"X8"	8"	5'–10"	3'–1"
12"X6"	6"	5'–8"	3'–0"
8"X8"	8"	5'–8"	3'–0"
8"X6"	6"	5'–6"	3'–0"
6"X6"	6"	5'–5"	2'–10"

USING TEE

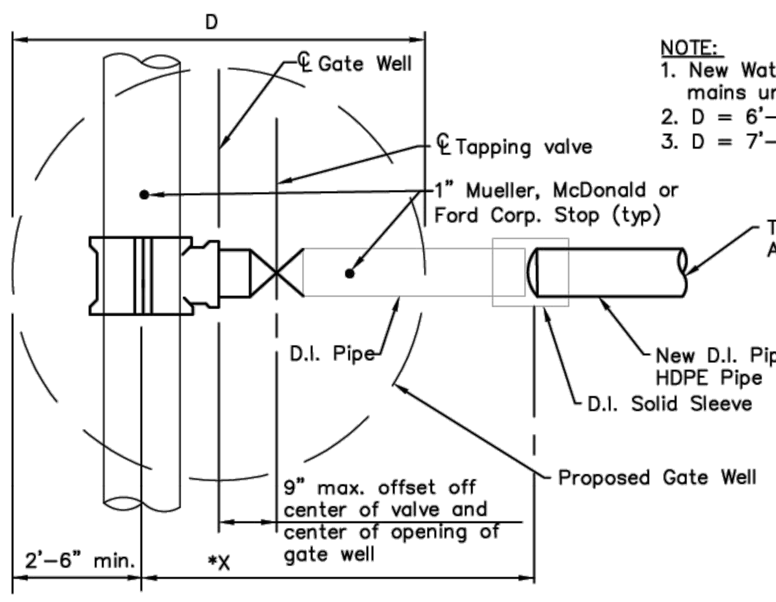

NOTE:
1. New Water Mains Shall NOT be connected to existing mains until they have been tested and chlorinated.
2. D = 6'–0" for 8" and 12" Water Main
3. D = 7'–0" for 16" and greater Water Main

SIZE of TEE	*X
12"X12"	20 7/8"
12"X8"	21"
12"X6"	19 5/8"
8"X8"	18 3/4"
8"X6"	17 3/4"
6"X6"	16 3/8"

USING STAINLESS STEEL TAPPING SLEEVE AND VALVE

TYPICAL CONNECTION DETAILS

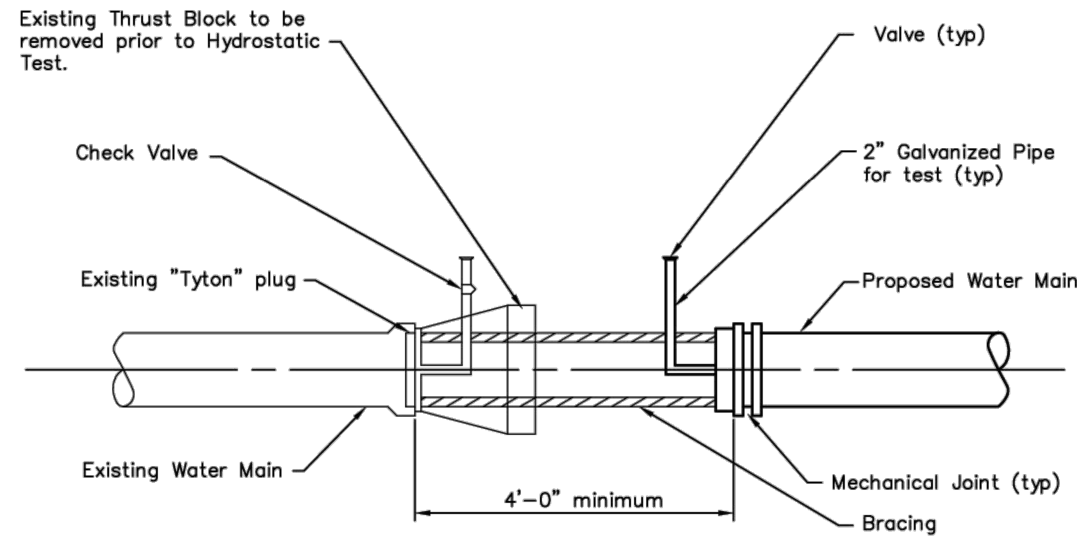

TEMPORARY ARRANGEMENT FOR
HYDROSTATIC PRESSURE TEST

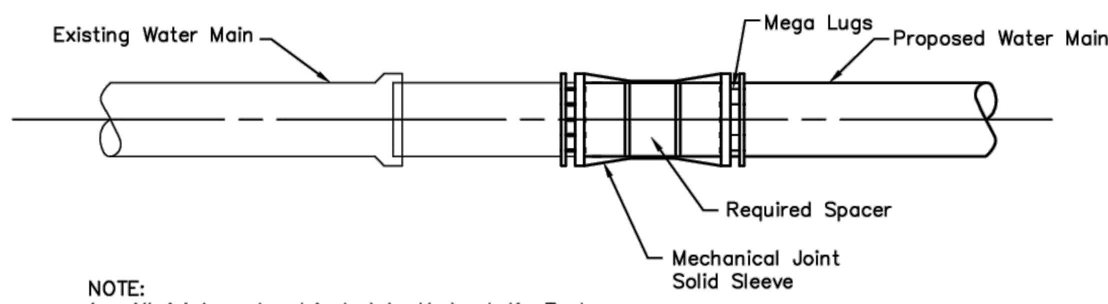

NOTE:
1. All joints not subjected to Hydrostatic Test shall be observed under line pressure to assure water tight fit.

COMPLETED CONNECTION
TO EXISTING WATER MAIN

HYDROSTATIC TEST AND MECHANICAL CONNECTION

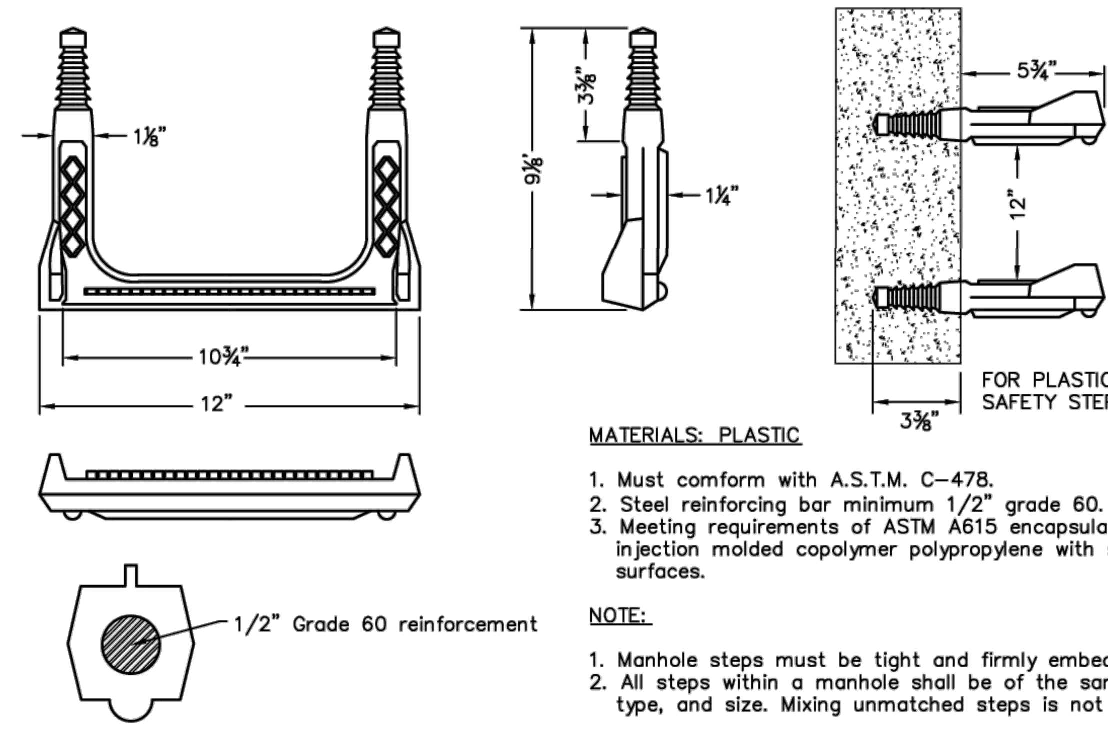

MATERIALS: PLASTIC

1. Must comform with A.S.T.M. C–478.
2. Steel reinforcing bar minimum 1/2" grade 60.
3. Meeting requirements of ASTM A615 encapsulated with injection molded copolymer polypropylene with serrated surfaces.

NOTE:

1. Manhole steps must be tight and firmly embedded.
2. All steps within a manhole shall be of the same design, type, and size. Mixing unmatched steps is not permitted.

MANHOLE STEP DETAIL

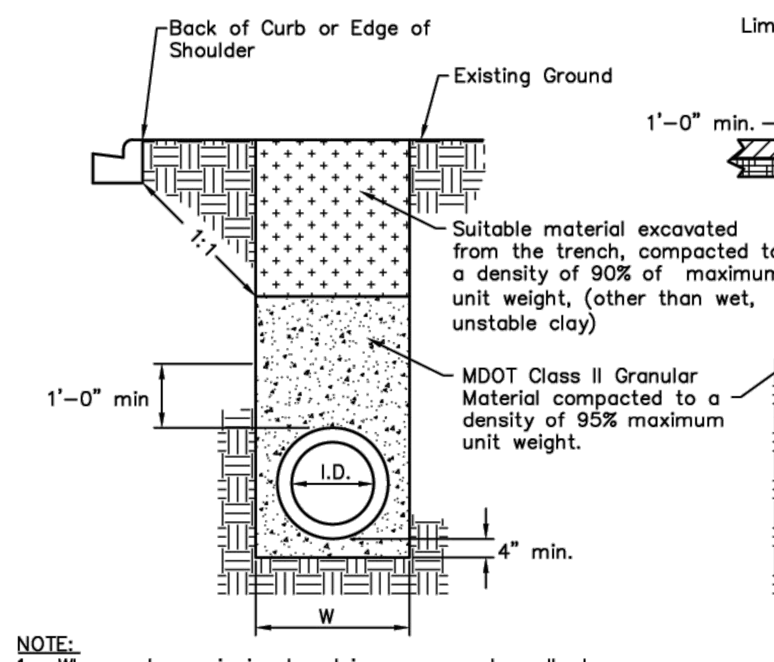

NOTE:
1. When water main is placed in a proposed roadbed area, it shall be backfilled with selected excavation material above the future subgrade to existing ground line.
2. Compaction of M.D.O.T. Class II granular material shall not exceed 12" lift.

EDGE OF TRENCH WITHIN 3
FEET OF PAVED SURFACE

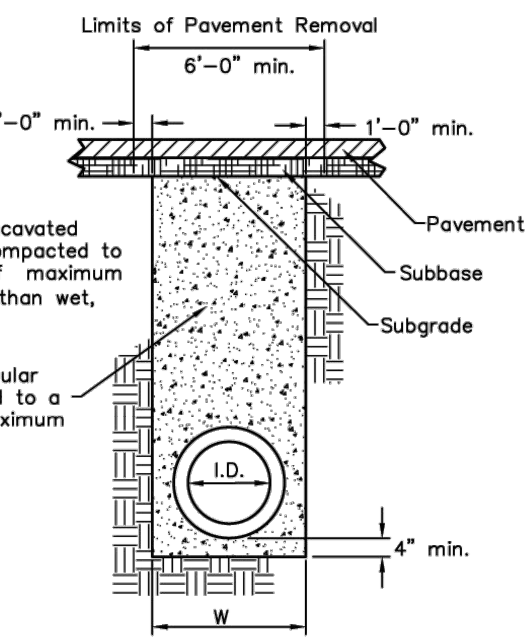

NOTE:
1. Estimated pavement removal widths to be trench width "W" plus 1'–0" each side of trench (6'–0" min.)

TRENCH UNDER PAVED
SURFACE

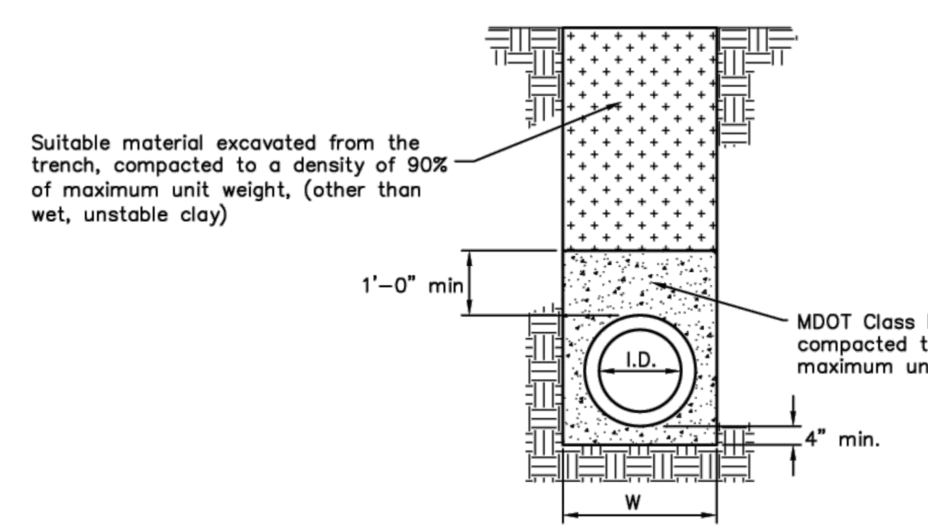

TRENCH NOT WITHIN
INFLUENCE OF PAVED AREA

WATER MAIN TRENCH CROSS–SECTIONS

I.D. PIPE SIZE (IN)	< 18	21	24	30	36
"W" TRENCH WIDTH (FT)	3.0	3.5	4.0	5.0	6.0

I.D. PIPE SIZE (IN)	42	48	54	60	66	72
"W" TRENCH WIDTH (FT)	7.0	8.0	9.5	10.0	10.5	11.0

I.D. PIPE SIZE (IN)	78	84	90	96	102	108
"W" TRENCH WIDTH (FT)	11.5	12.0	12.5	13.0	13.5	14.0

MINIMUM UTILITY TRENCH WIDTHS

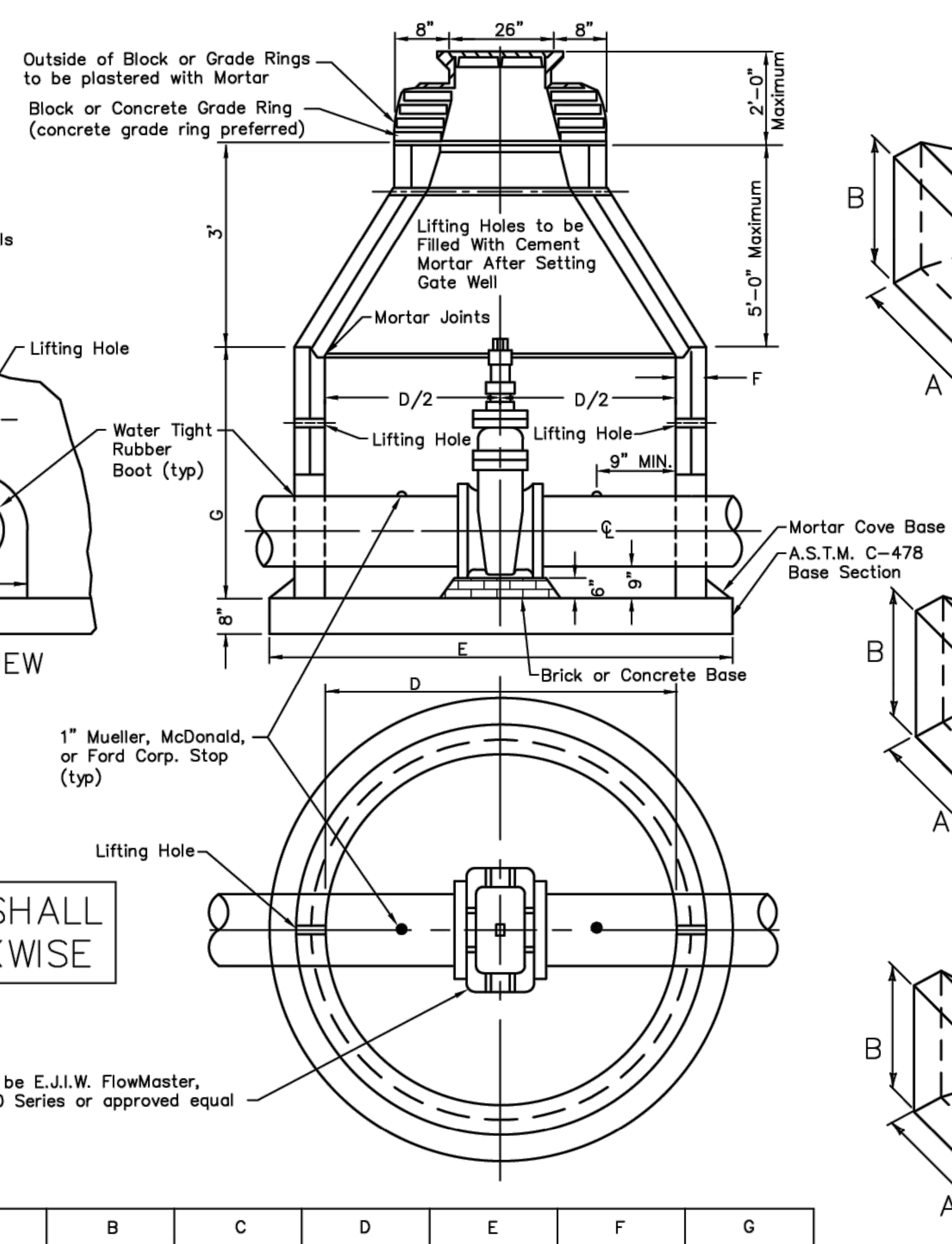

NOTE:
Pre–cast Gate Wells shall Meet A.S.T.M. C478–61 T

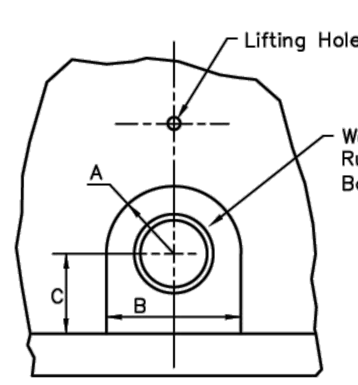

SIDE VIEW

GATEWELLS SHALL
OPEN CLOCKWISE

SIZE	A	B	C	D	E	F	G
6" & 8"	7 1/2"	1'–3"	11 1/2"	5'–0"	7'–0"	5"	2'–8" 4'–0"
12" & 16"	10 1/2"	1'–9"	1'–1 1/2"	6'–0"	8'–0"	7"	3'–0" 6'–0"

PRE–CAST GATE WELLS – 6" TO 16"

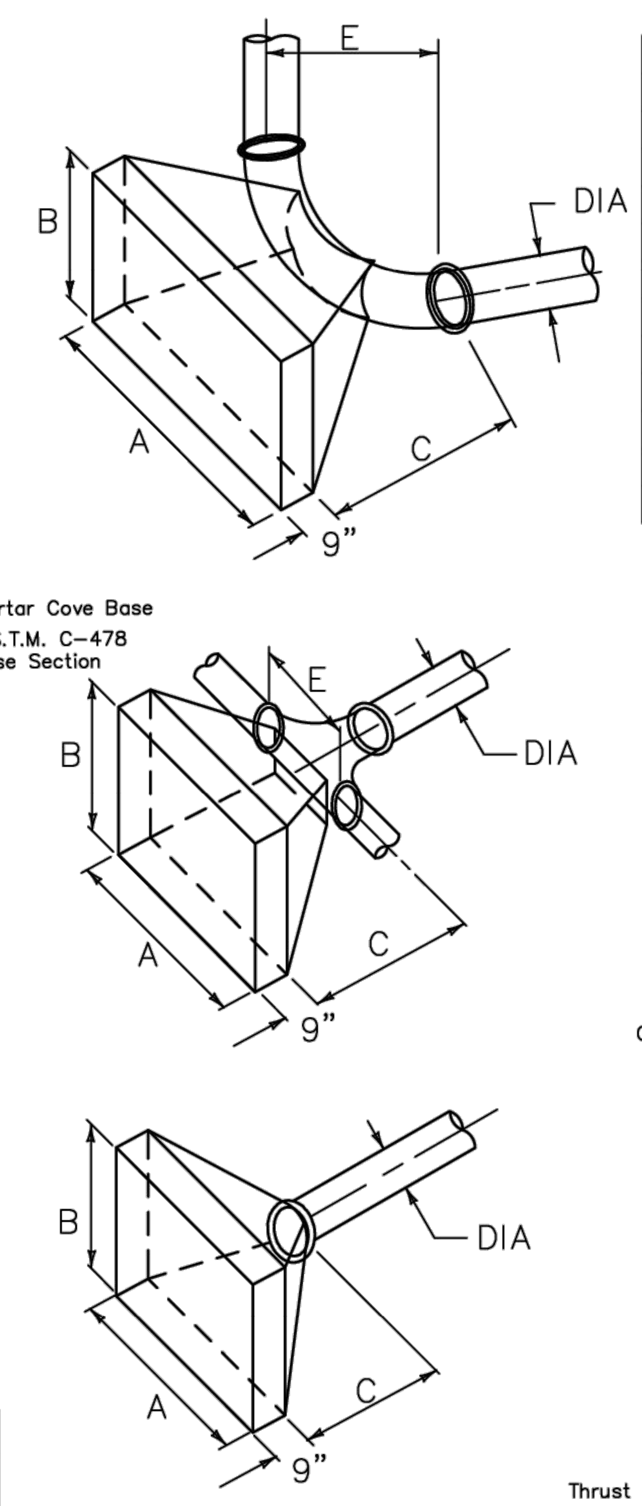

HORIZONTAL BENDS					
DIA	ANGLE	A	B	C	E
6"	22.5°/45°	2'–0"	1'–6"	1'–6"	0'–9"
6"	90°	2'–6"	1'–6"	1'–9"	1'–0"
8"	22.5°/45°	2'–6"	2'–0"	1'–9"	1'–0"
8"	90°	3'–6"	2'–6"	1'–9"	1'–3"
12"	22.5°	2'–6"	2'–0"	1'–9"	1'–3"
12"	45°	3'–6"	2'–6"	2'–0"	1'–3"
12"	90°	5'–6"	3'–0"	2'–0"	1'–6"
16"	22.5°	3'–6"	2'–6"	2'–0"	1'–6"
16"	45°	5'–6"	3'–0"	2'–9"	1'–6"
16"	90°	6'–0"	5'–0"	2'–9"	1'–9"
20"	90°	8'–0"	6'–6"	3'–6"	2'–3"

TEES				
DIA	A	B	C	E
6"	2'–6"	1'–6"	2'–0"	1'–4"
8"	3'–0"	2'–0"	2'–3"	1'–6"
12"	4'–0"	3'–0"	2'–9"	2'–0"
16"	5'–0"	4'–0"	3'–6"	2'–6"
20"	6'–6"	4'–6"	4'–0"	3'–0"

Concrete Thrust Block Shall Extend To Undisturbed Earth

PLUGS & CAPS			
DIA	A	B	C
6"	2'–6"	1'–6"	2'–0"
8"	3'–0"	2'–0"	2'–3"
12"	4'–0"	3'–0"	2'–6"
16"	5'–0"	4'–0"	2'–9"
20"	7'–0"	5'–0"	3'–0"

Thrust Block Shall Be Constructed of Grade "B" (3000psi) Concrete.

CONCRETE THRUST BLOCKS

CITY OF LIVONIA
STANDARD WATER MAIN NOTES:

1. TAP FEE – A tap fee must be paid and a bond posted with the Water and Sewer Department of the City of Livonia prior to beginning any work. In addition, a meter must be obtained from the Water and Sewer Department to meter all water consumed including, flushing and other normal water installation operations.
2. Ductile Iron Pipe (D.I.) – All water main pipe 16" diameter and smaller shall be Class 54, meeting ANSI Spec. A– 21.51 and shall be lined with a double thickness of cement–mortar meeting ANSI Spec. 21.4.
3. High Density Polyethylene Pipe (HDPE) shall meet AWWA C906 and SDR 11. The pipe shall be blue shelled on the exterior and black on the inside. Tracer wire for water mains to be coated solid 8 gauge copper wire attached to all metal connections (valves, hydrants, house connections, etc.).
4. Joints – All ductile iron water pipe and fittings shall have push–on joints either "Tyton or "Super Bell– Tite", except where otherwise noted.
5. Fittings shall be Tyler Union or approved equal ductile iron with push–on joints, pressure rating 250 psi, conforming to ANSI Specification 21.10 (AWWA C110) "Gray Iron and Ductile–Iron Fittings," 2" through 48", for Water and other Liquids."
6. GATE VALVES – Valves shall be manufactured and tested to meet the requirements of ANSI/AWWA C515. Valves shall meet or exceed the requirements of Underwriters Laboratories Standard UL262 and Factory Mutual Standard 1130 with a working pressure of the valve at 250 psi. Valves shall be E.J.I.W. FlowMaster, Mueller 2360 Series or approved equal. Valves to rotate clockwise to open, include a right resilient wedge, and have a red operating nut.
7. Bedding – A minimum of 4" of compacted approved sand (100% passing 3/8" sieve) shall be provided under all water pipe and continued to a level 12" above the pipe.
8. POLYETHYLENE ENCASEMENT – All ductile iron water pipe and fittings shall be wrapped in 8 mil thick, black, polyethylene, in accordance with ANSI Spec. A–21.5.
9. All new and existing water main structures must be water tight. If work is to be done on an existing structure, the contractor is responsible for ensuring that the structures is water tight upon completion of the work. City Engineer has authority in some specific circumstances to waive this requirement due to existing utility conflicts.
10. All horizontal and vertical bends require the use of "Mega–Lug" restraints and thrust blocking.
11. All bolts must be "Cor–Blue" T–Bolt Type.
12. OPERATING VALVES – The City of Livonia Water Department will open and close all valves on existing lines. No valve on an existing water line is to be operated by anyone other then an authorized Water Department employee.
13. FOAM SWABBING (POLYPIG) – Both the initial flushing and the flushing after chlorination will be supplemented by passing foam swab through the water main. The contractor shall be responsible for providing the required foam swab and provide a detailed plan prior to flushing.
14. CONNECTIONS TO EXISTING WATER MAINS will not be allowed until the new lines have passed the pressure test (150 p.s.i. for 1 hr. max. loss 50 gal/Inch dia./mile/day) and have been satisfactorily disinfected with chlorine (50 ppm–24 hrs).
15. NOTIFICATION – Both the Engineering Division and the City of Detroit Water and Sewer Department must be notified at least 24 hours in advance when any connections are to be made to an existing water main. "24 HOURS NOTIFICATION REQUIRED"
16. When a PRESSURE TEST is to be made on a new water line, the LIVONIA ENGINEERING DEPT MUST BE NOTIFIED 24 HOURS IN ADVANCE and be present for the test to verify that all main valves are open and to open all hydrants during the course of the pressure test. The contractor is responsible to provide the necessary equipment and labor to perform this test, and is responsible to provide testing for bacteriologic water samples by an approved Michigan Department of Environmental Quality (MDEQ) certified lab. A hard copy of the approved results shall be provided to the City of Livonia Engineering Division and DPW before the scheduled connection to the main line occurs, along with proper (24 hours) notification to residents and businesses.
17. FINAL VERIFICATION – When all connections have been made following chlorination and pressure test, the contractor shall notify the Livonia Water & Engineering Departments, so that they can verify that all valves are left in "OPEN" Position.
18. Any new water main tapping an existing line shall be done by using a stainless steel tapping valve and sleeve. All valves 6" and larger shall be placed in a precast gate well.
19. For water service leads, no joints or unions will be permitted under existing or proposed pavement.
20. All surface structures, such as hydrants, gate wells, and valve boxes must be set to grade or as indicated on the plans.

CITY OF LIVONIA

Department of Public Works, Engineering Division
33000 Civic Center Drive
Livonia, Michigan 48154
(734) 466–2570, (734) 466–2195 Fax

WATER MAIN STANDARD DETAILS

CITY OF LIVONIA, WAYNE COUNTY, MICHIGAN

1

JOB No.

REVISIONS:	REV. DATE	
Hydrant Specification (5BR)	01/2005	CADD: dl
Poly Swab Supply Removal	06/2006	ENG: tz
Water Main Note Revisions	09/2007	PM:
Mech. joint Replaces Push–On Joints	02/2008	TECH:
Misc. Note Revisions	02/2010	Water Main Detail.dwg
Misc. Note Revisions	12/2013	FB#:

DATE: 10/1975
SHEET 1 OF 2

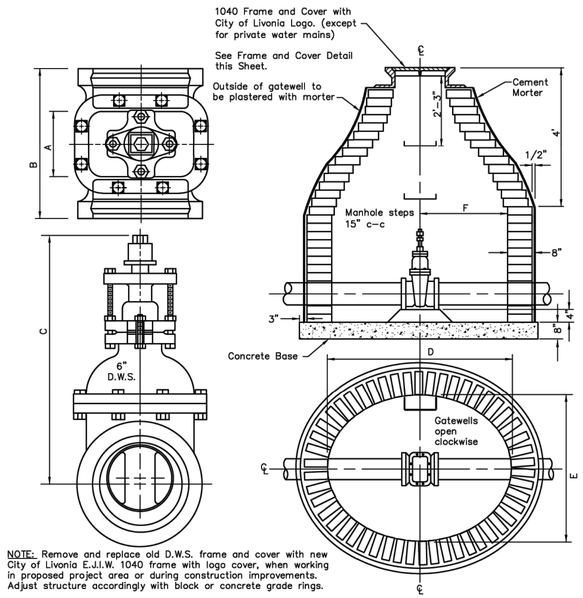

NOTE: Remove and replace old D.W.S. frame and cover with new City of Livonia E.J.I.W. 1040 frame with logo cover, when working in proposed project area or during construction improvements. Adjust structure accordingly with block or concrete grade rings.

SIZE	WEIGHT OF VALVE (lb)	A	B	C	D	E	F
4	120	5 1/2"	11 1/2"	16 3/16"			
6	200	5 3/4"	12 3/4"	21 1/16"	5'-0"	4'-0"	2'-6"
8	300	6 3/4"	13 3/4"	27 1/8"	5'-0"	4'-0"	2'-6"
10	378	6 1/2"	14"	29 7/8"	5'-6"	4'-6"	2'-9"
12	547	8"	15 1/2"	33 13/16"	5'-6"	4'-6"	2'-9"
16	1300	10 3/4"	19"	43 3/8"	6'-0"	5'-6"	3'-0"

EXISTING BRICK 6" TO 16" GATE-WELLS (REFERENCE DRAWING)

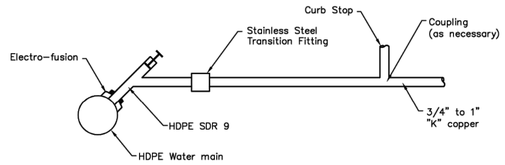

HOUSE LEAD DETAIL (HDPE TO COPPER)

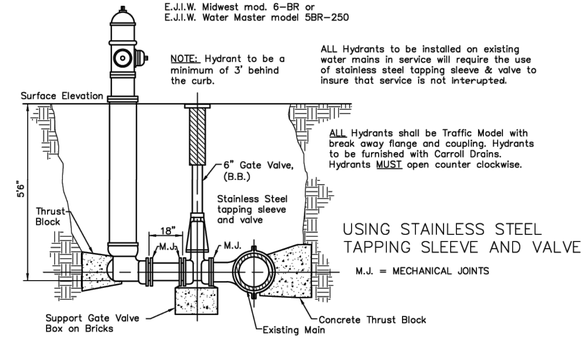

USING STAINLESS STEEL TAPPING SLEEVE AND VALVE

M.J. = MECHANICAL JOINTS

6" HYDRANT INSTALLATION ON EXISTING WATER MAIN

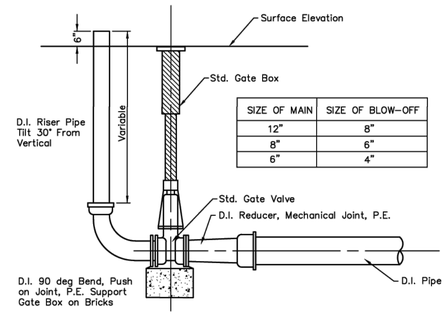

SIZE OF MAIN	SIZE OF BLOW-OFF
12"	8"
8"	6"
6"	4"

DETAIL OF TEMPORARY BLOW-OFF

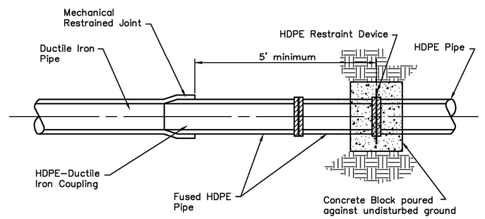

NOTE:
Mechanically restrain D.I.P. a minimum of 3 joints down from HDPE transition.

HDPE-DUCTILE IRON PIPE CONNECTION

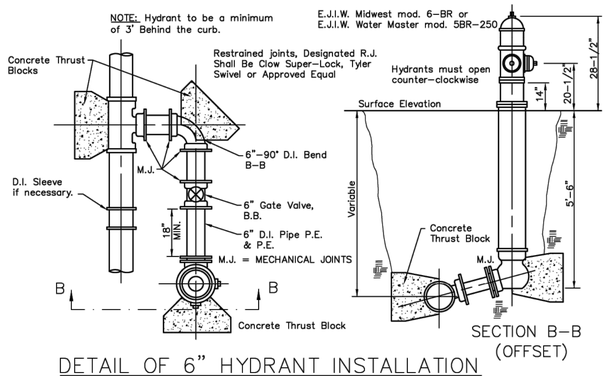

SECTION B-B (OFFSET)

DETAIL OF 6" HYDRANT INSTALLATION

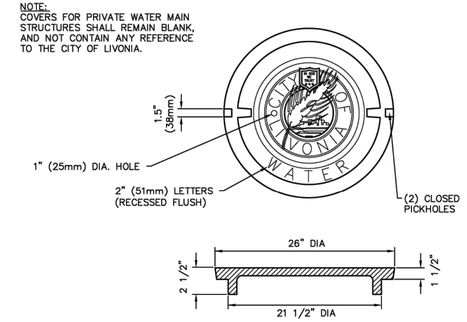

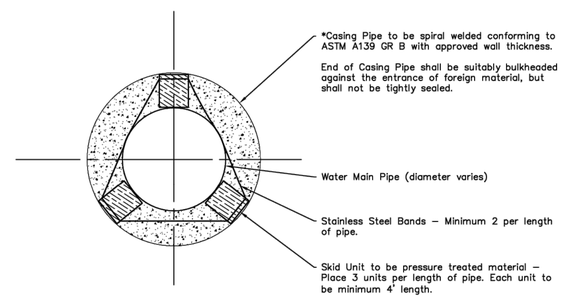

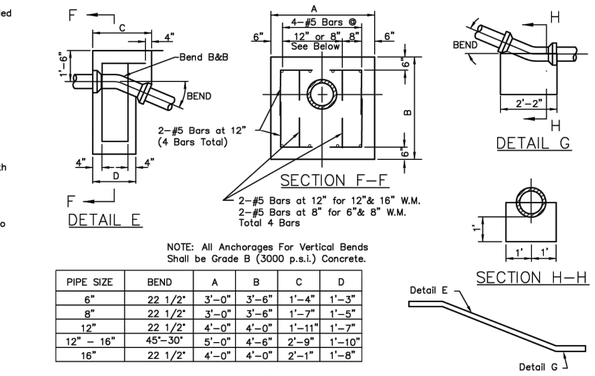

NOTE: All Anchorages For Vertical Bends Shall be Grade B (3000 p.s.i.) Concrete.

PIPE SIZE	BEND	A	B	C	D
6"	22 1/2"	3'-0"	3'-6"	1'-4"	1'-3"
8"	22 1/2"	3'-0"	3'-6"	1'-7"	1'-5"
12"	22 1/2"	4'-0"	4'-0"	1'-11"	1'-7"
12" - 16"	45'-30"	5'-0"	4'-6"	2'-9"	1'-10"
16"	22 1/2"	4'-0"	4'-0"	2'-1"	1'-8"

VERTICAL BENDS

MATERIAL SPECIFICATION
COVER GRAY IRON, A.S.T.M. STD. SPEC. A - 48, CL 35B.
Bearing Surfaces of cover and Frame shall be ground to prevent rocking. Casting shall not be coated.

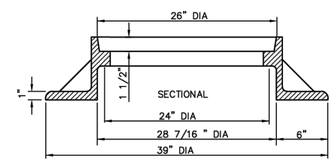

FRAME AND COVER DETAIL (E.J.I.W. 1040)

NOTE:
COVERS FOR PRIVATE WATER MAIN STRUCTURES SHALL REMAIN BLANK, AND NOT CONTAIN ANY REFERENCE TO THE CITY OF LIVONIA.

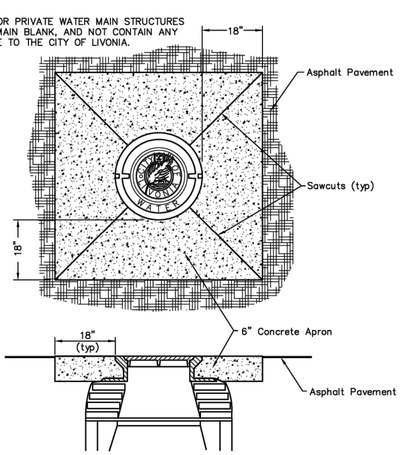

WATER MANHOLE APRON

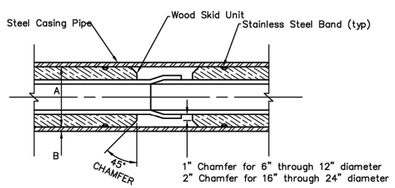

DIA. OF SANITARY SEWER (IN)	DIA. OF WATER MAIN (IN)	MIN. "A" (IN)	ROAD CROSSING MIN "B" (IN)	RAILROAD CROSSING MIN "B" (IN)
	6	16	0.375	0.375
	8	18	0.375	0.375
	12	24	0.375	0.438
10	16	26	0.375	0.500
12-15	20	30	0.375	0.500
18	24	36	0.375	0.500

NOTE:

1. The annular space within the casing pipe shall be filled approximately two thirds full of granular material Class II (M.D.O.T.) or pea pebble. The top of the Water Main or upper spaces, if any, shall not be in contact with the casing pipe.
2. Casing pipe diameter to be a minimum of 10" larger than water main diameter.

SKID UNIT AND CASING DETAIL FOR WATER MAIN

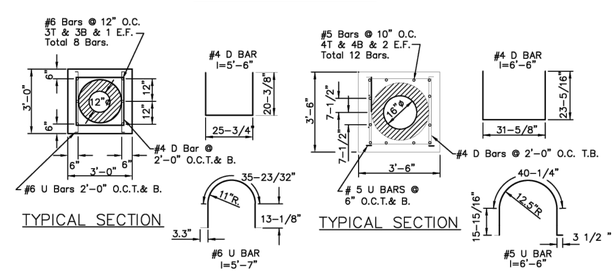

ENCASEMENT DETAIL FOR 12" D.I. WATER MAIN

Total Steel Per Lin. Ft. of Encasement = 50.45 Lbs
Concrete Per Lin. Ft. of Encasement = 0.30 Cu.Yd.

ENCASEMENT DETAIL FOR 16" D.I. WATER MAIN

Total Steel Per Lin. Ft. of Encasement = 43.23 Lbs
Concrete Per Lin. Ft. of Encasement = 0.39 Cu.Yd.

CONCRETE ENCASEMENT DETAILS

CITY OF LIVONIA
Department of Public Works, Engineering Division
33000 Civic Center Drive
Livonia, Michigan 48154
(734) 466-2570, (734) 466-2195 Fax

WATER MAIN STANDARD DETAILS

CITY OF LIVONIA, WAYNE COUNTY, MICHIGAN

2

DATE: 10/1975
SHEET 2 OF 2
CADD: dl
ENG: tz
PM:
TECH:
Water Main Detail.dwg
1:1

JOB No.

REVISIONS:

REV.	DATE	
Hydrant Specification (SSB)	07/2005	
Poly Wrap Specification Removed	06/2006	
Water Main Note Revisions	09/2007	
Mech. Joint Replaces Push-On Joints	02/2008	
Misc. Note Revisions	02/2010	
Misc. Note Revisions	02/2013	

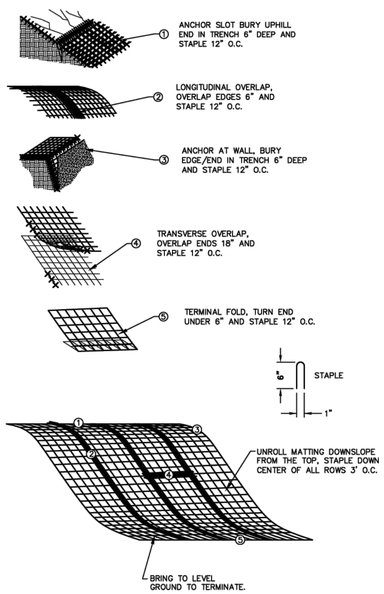

STRAW MULCH EROSION CONTROL BLANKET

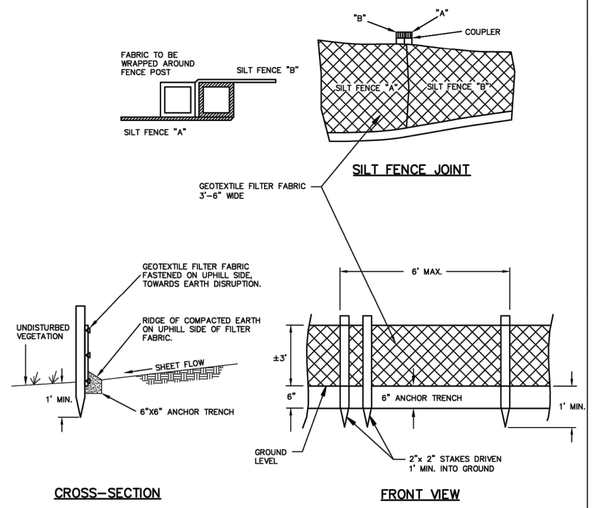

FABRIC SILT FENCE DETAIL

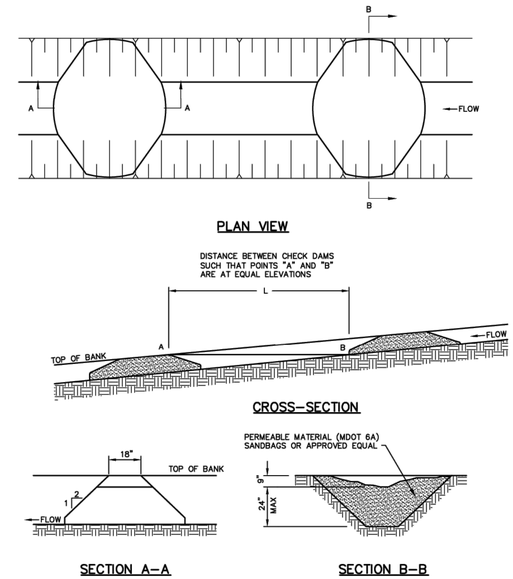

TEMPORARY CHECK DAM DETAIL

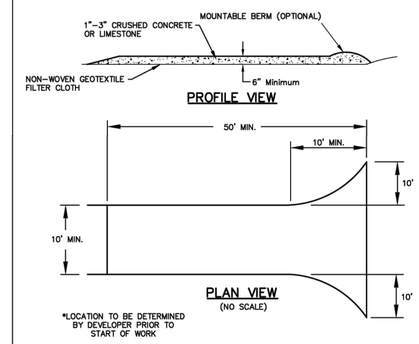

CONSTRUCTION ACCESS DRIVE DETAIL

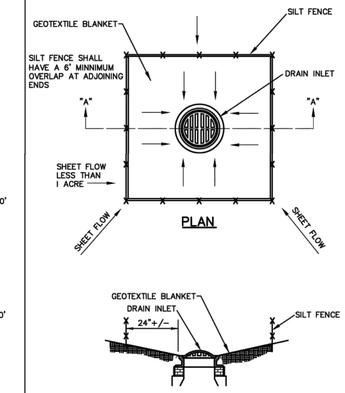

REAR YARD INLET SILT FENCE BARRIER

BAG DETAIL

NOTE: TEMPORARY INLET SEDIMENT FILTER TO BE INSTALLED ON ALL PAVED CATCH BASINS OR STORM INLETS. INLET FILTER TO BE SIMILAR TO "STREAMGUARD" AS MANUFACTURED BY STORMWATER SERVICES CORP. (206-767-0441) OR "SILTSACK" AS MANUFACTURED BY ATLANTIC CONSTRUCTION FABRICS, INC., (800-448-3636). CLEAN FILTER AS NEEDED.

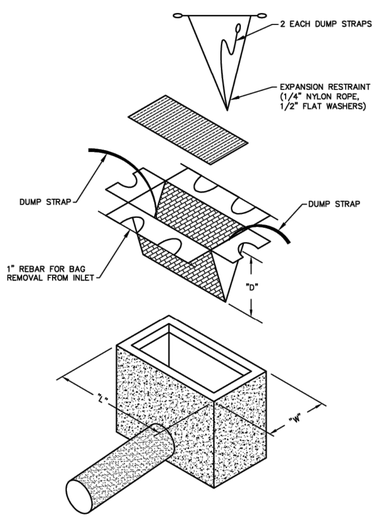

SILTSACK SEDIMENT FILTER DETAIL

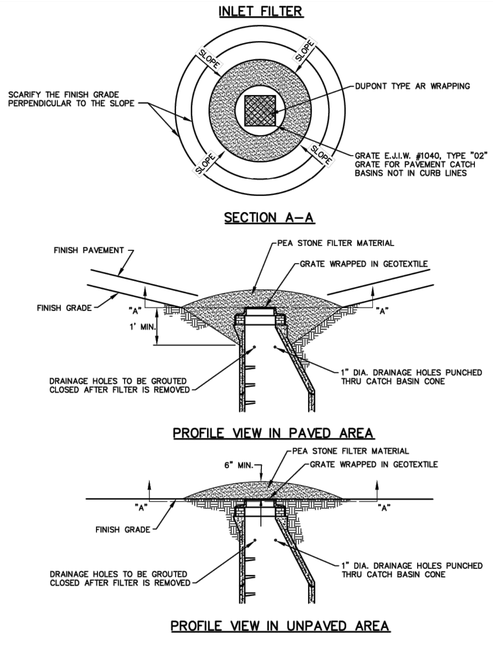

INLET FILTER DETAILS FOR SOIL EROSION & SEDIMENTATION CONTROL

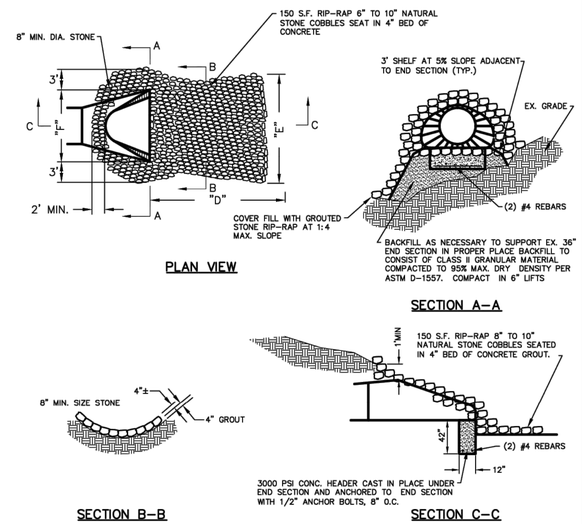

PIPE ø	"D"	"E"	"F"	SYD
12"	5'-0"	6'-6"	3'-0"	3.7
15"	5'-0"	7'-0"	3'-0"	4.1
18"	5'-0"	7'-6"	3'-6"	4.3
21"	5'-6"	8'-0"	4'-0"	5.4
24"	6'-0"	8'-6"	4'-6"	6.3
27"	6'-6"	9'-0"	5'-0"	7.3
30"	7'-0"	9'-9"	5'-6"	8.4
36"	8'-0"	10'-9"	6'-0"	10.3
42"	9'-0"	11'-9"	6'-6"	12.0
48"	10'-0"	13'-0"	7'-0"	14.2
54"	11'-0"	13'-6"	7'-6"	15.9
60"	12'-0"	14'-0"	8'-0"	17.6

STORM OUTLET DETAIL WITH GROUTED STONE RIP-RAP

SOIL EROSION AND SEDIMENTATION CONTROL MAINTENANCE SCHEDULE AND NOTES:

1. ALL MUD, DIRT, AND/OR DEBRIS TRACKED OR SPILLED ONTO ANY PAVED AREAS SHALL BE REMOVED/CLEANED DAILY IN A PROMPT MANNER BY THE CONTRACTOR AND/OR BUILDER. SCRAPING AND/OR SWEEPING OF PAVED AREAS TO REMOVE DEBRIS WILL BE REQUIRED WEEKLY.
2. SILT FENCE MAINTENANCE SHALL INCLUDE THE REMOVAL OF ANY BUILT-UP SEDIMENT WHEN THE HEIGHT OF THE SEDIMENT ACCUMULATES TO ⅓ TO ½ OF THE HEIGHT OF THE FENCE OR IF THE FABRIC BEGINS TO SAG. THE CONTRACTOR IS RESPONSIBLE FOR THE REMOVAL, REPLACEMENT, RETRENCHING AND BACKFILLING OF THE SILT FENCE SHOULD IT FALL OR BE DAMAGED DURING CONSTRUCTION.
3. SILT SACK MAINTENANCE SHALL INCLUDE THE REMOVAL OF ANY ACCUMULATED SEDIMENTATION OR OTHER DEBRIS FROM THE SILT SACK. THE REMOVAL OF SEDIMENTATION SHOULD BE ACCOMPLISHED BY USING A STIFF BRISTLE BROOM OR SQUARE POINT SHOVEL. IF SILT SACKS CANNOT BE CLEANED, OR ARE DAMAGED, THEY MUST BE REPLACED ACCORDING TO THE PLANS.
4. PERMANENT SOIL EROSION CONTROL MEASURES FOR ALL SLOPES, CHANNELS, DITCHES OR ANY DISTURBED LAND AREA SHALL BE COMPLETED WITHIN 5 CALENDAR DAYS AFTER FINAL GRADING OR FINAL EARTH CHANGES HAVE BEEN COMPLETED. WHEN IT IS NOT POSSIBLE TO PERMANENTLY STABILIZE A DISTURBED AREA AFTER AN EARTH CHANGE HAS BEEN COMPLETED, OR WHERE SIGNIFICANT EARTH CHANGE ACTIVITY CEASED, TEMPORARY SOIL EROSION CONTROL MEASURES SHALL BE IMPLEMENTED WITHIN 5 CALENDAR DAYS. ALL TEMPORARY SOIL EROSION CONTROL MEASURES SHALL BE MAINTAINED UNTIL PERMANENT SOIL EROSION CONTROL MEASURES ARE IMPLEMENTED AND /OR ESTABLISHED. ALL PERMANENT SOIL EROSION CONTROL MEASURES WILL BE IMPLEMENTED AND ESTABLISHED BEFORE A CERTIFICATE OF COMPLIANCE IS ISSUED. ALL DRAIN BANKS DISTURBED BY CONSTRUCTION SHALL BE RESTORED WITHIN 5 CALENDAR DAYS AND SOD PEGGED IN PLACE.
5. FILTER BARRIERS AND LOW POINT INLET FILTERS SHALL BE INSPECTED IMMEDIATELY AFTER EACH RAINFALL AND AT LEAST DAILY DURING PROLONGED RAINFALL. ANY REQUIRED REPAIRS SHALL BE MADE IMMEDIATELY.
6. IF ANY FILTER FABRIC DECOMPOSES OR BECOMES INEFFECTIVE PRIOR TO THE END OF THE EXPECTED USABLE LIFE, AND THE BARRIER IS STILL REQUIRED, THE FABRIC SHALL BE REPLACED PROMPTLY. FILTER FENCING WHICH SAGS, FALLS OVER OR IS NOT STAKED IN, SHOULD PROMPTLY REPAIRED OR REPLACED.
7. ANY SEDIMENT DEPOSITS REMAINING IN PLACE AFTER THE SILT FENCE OR FILTER BARRIER IS NO LONGER REQUIRED SHALL BE DRESSED TO CONFORM WITH THE EXISTING GRADE, PREPARED, AND SEEDED.
8. ALL SOIL EROSION AND SEDIMENTATION CONTROL MEASURES BOTH PERMANENT AND TEMPORARY SHALL BE THE RESPONSIBILITY OF THE PROPERTY OWNER, UNLESS OTHERWISE NOTED. THESE MAINTENANCE RESPONSIBILITIES SHALL BE PART OF ANY FUTURE SALES AGREEMENT.
9. EXCAVATED MATERIALS SHALL REMAIN ON-SITE. PARTICULAR CARE SHOULD BE TAKEN WHEN WORKING ALONG THE PERIMETER OF THE SITE. IN NO EVENT SHALL THE WORK AREA EXTEND BEYOND THE LIMITS INDICATED ON THE PLANS.
10. ALL SOIL EROSION AND SEDIMENT CONTROL WORK SHALL CONFORM TO THE STANDARDS AND SPECIFICATIONS OF WAYNE COUNTY AND THE CITY OF LIVONIA.
11. DAILY INSPECTIONS SHALL BE MADE BY THE CONTRACTOR TO DETERMINE EFFECTIVENESS OF THE SOIL EROSION AND SEDIMENTATION CONTROL MEASURES. ANY NECESSARY REPAIRS SHALL BE PERFORMED WITHOUT DELAY.
12. EROSION AND/OR SEDIMENT FROM ON-SITE WORK SHALL BE CONTAINED ON THE SITE AND NOT ALLOWED TO COLLECT ON ANY OFF-SITE AREAS, OR IN WATERWAYS. WATERWAYS INCLUDE BOTH NATURAL AND MAN-MADE OPEN DITCHES, STREAMS, STORM DRAINS, LAKES, AND PONDS.
13. SOIL EROSION AND SEDIMENT CONTROL MEASURES ARE TO BE INSTALLED PRIOR TO, OR AS THE FIRST STEP IN CONSTRUCTION. SESC PRACTICES SHALL BE APPLIED AS A PERIMETER DEFENSE AGAINST THE TRANSPORTING OF SILT OFF-SITE.
14. THE CONTRACTOR SHALL APPLY TEMPORARY SOIL EROSION AND SEDIMENTATION CONTROL MEASURES AS REQUIRED, AND AS DIRECTED ON THESE PLANS. TEMPORARY MEASURES SHALL BE REMOVED AS SOON AS PERMANENT STABILIZATION OF SLOPES, DITCHES, AND OTHER EARTH CHANGES HAVE BEEN ACCOMPLISHED AND APPROVED BY THE CITY OF LIVONIA ENGINEERING DIVISION.
15. DEBRIS FROM THE PROJECT SITE SHALL BE LEFT ON-SITE BY DELIVERY OR CONSTRUCTION VEHICLES THROUGH THE USE OF CLEAN STONE EXIT(S). SHOULD THE STONE BECOME LESS EFFECTIVE AND/OR EFFICIENT IT SHALL BE REPLACED. ALL CONSTRUCTION TRAFFIC MUST USE THE CLEAN STONE EXIT(S).
16. DUST CONTROL SHALL BE EXERCISED AT ALL TIMES WITHIN THE PROJECT BY THE DEVELOPER AND/OR HIS CONTRACTORS, SPRINKLING TANK TRUCKS MUST BE AVAILABLE AT ALL TIMES TO BE USED ON HAUL ROUTES OR OTHER PLACES WHERE DUST MAY BECOME A PROBLEM.
17. EARTH EMBANKMENT BRIDGES PLACED OVER NEW PAVEMENT SHALL BE LOCATED ONLY AT PAVEMENT HIGH-POINTS AND SHALL HAVE STRAW BALES PLACED ALONG EACH SIDE OF THE BRIDGE FOR THE WIDTH OF PAVEMENT.
18. IMMEDIATELY AFTER SEEDING, ALL SEEDED AREAS SHALL BE MULCHED WITH UNWEATHERED SMALL GRAIN STRAW OR HAY, SPREAD UNIFORMLY AT THE RATE OF 1½ TONS TO 2 TONS PER ACRE OR 100 POUNDS PER 1000 SQUARE FEET. ANCHOR MULCH WITH DISC-TYPE ANCHORING TOOL OR OTHER MEANS APPROVED BY THE CITY OF LIVONIA ENGINEERING DIVISION.

CITY OF LIVONIA
Department of Public Works, Engineering Division
33000 Civic Center Drive
Livonia, Michigan 48154
(734) 466-2570, (734) 466-2195 Fax

SOIL EROSION & SEDIMENTATION CONTROL

Standard Detail Sheet

1

DATE: 1/23/2003
SHEET 1 OF 1
CADD: dl
ENG: tz
PM:
TECH:
Soil Erosion Detail.dwg

JOB No.

REVISIONS:	REV.	DATE
Landowner Responsibility Note	2	2/2007
Check Dam Detail Added	2	2/2007
Misc. Text Edits	3	3/2013

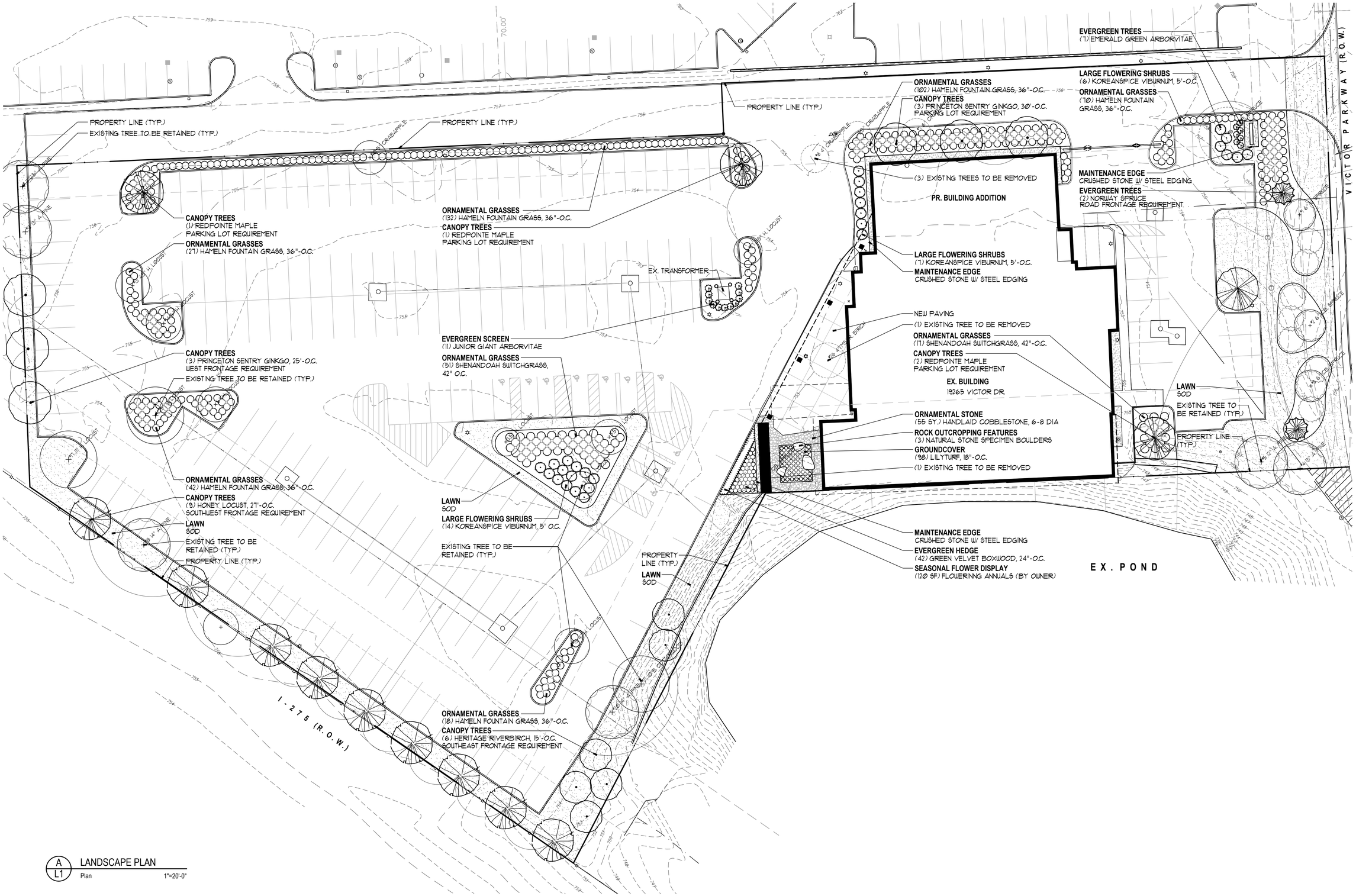

A
L1
LANDSCAPE PLAN
Plan 1"=20'-0"

dūL
LANDSCAPE ARCHITECTURE

248.644.3410
duldesign.com

BMW MOTORCYCLE DEALERSHIP
19265 Victor Parkway
Livonia, Michigan 48302

PROJECT

PRELIMINARY

Landscape Development
LANDSCAPE PLAN

SHEET TITLE

1"=20'-0"
NORTH

SCALE

PROJECT NUMBER:	25108
DRAWN:	M. Jacobs
CHECKED:	T. Shoemaker
DATE:	March 19, 2025
REVISIONS:	March 31, 2025

L1

LANDSCAPE REQUIREMENTS

EXISTING SITE ZONING: C-4, HIGH RISE COMMERCIAL DISTRICT
EXISTING SITE AREA: 139,672.12 S.F. OR 3.21 ACRES

ROAD FRONTAGE

REQUIRED ROAD FRONTAGE LANDSCAPING:

- 1 DECIDUOUS OR EVERGREEN TREE PER 40 L.F.
- 1 ORNAMENTAL TREE PER 100 L.F.
- 8 SHRUBS PER 40 L.F.

REQUIRED ROAD FRONTAGE LANDSCAPING FOR VICTOR PARKWAY:
VICTOR PARKWAY: 139 L.F. - 24 L.F. (DRIVEWAY) = 115 L.F.

- 115 L.F. / 40 L.F. = 2.88 OR 3 TREES
- 115 L.F. / 100 L.F. = 1.15 OR 1 ORNAMENTAL TREE
- 115 L.F. / 40 X 8 = 23 SHRUBS

PROVIDED ROAD FRONTAGE LANDSCAPING FOR VICTOR PARKWAY:

- 6 TREES + EX. SHRUBS WITH BERM

PARKING LOT

REQUIRED PARKING LOT LANDSCAPING:

- 5% OF ALL PAVED AREAS TO BE LANDSCAPE AREA
- 1 TREE REQUIRED PER 300 S.F. PAVED AREA

REQUIRED PARKING LOT LANDSCAPING:

- 90,077 S.F. X 5% = 4,503.85 S.F. REQUIRED
- TREES REQUIRED: 4,503.85 S.F. / 300 S.F. = 15.01 OR 15 TREES

PROPOSED PARKING LOT LANDSCAPING:

- LANDSCAPE AREA PROVIDED: 25,157 S.F.
- TREES PROVIDED: 19 TREES

GREENBELT

REQUIRED GREENBELT LANDSCAPING:

- 1 TREE REQUIRED PER 30 L.F. GREENBELT

REQUIRED GREENBELT LANDSCAPING:

- WEST: 151.91 L.F. / 30 L.F. = 5.06 OR 5 TREES
- SOUTHWEST: 312.61 L.F. / 30 L.F. = 10.42 OR 10 TREES
- EAST: 196.83 L.F. / 30 L.F. = 6.5 OR 7 TREES

PROPOSED GREENBELT LANDSCAPING:

- WEST: 5 TREES
- SOUTHWEST: 11
- EAST: 8 TREES

LANDSCAPE DEVELOPMENT NOTES

1.) ALL EXISTING AND/OR PROPOSED SITE UTILITIES SHALL BE FIELD LOCATED, FLAGGED, AND VERIFIED PRIOR TO ANY LANDSCAPE OR IRRIGATION CONSTRUCTION.

2.) ALL SPECIFIED AND INSTALLED PLANT MATERIAL SHALL BE IN FULL AND STRICT ACCORDANCE WITH AMERICAN NURSERYMAN STANDARDS (LATEST EDITION) AND BE:
A.) NURSERY GROWN.
B.) STATE DEPARTMENT OF AGRICULTURE INSPECTED AND APPROVED.
C.) NO. 1 GRADE WITH STRAIGHT, UNSCARRED TRUNKS & WELL-DEVELOPED UNIFORM CROWNS ON TREES.
D.) WARRANTED FOR A MIN. 1 YEAR FROM DATE OF ACCEPTANCE

3.) SPECIFIED PLANTING SOIL MIXTURE FOR ALL SPECIFIED BEDS & PLANTS SHALL BE THREE (3) PARTS IMPORTED WELL-DRAINED, SCREENED ORGANIC TOPSOIL, TO ONE (1) PART IMPORTED CLEAN SAND, TO ONE (1) PART CANADIAN SPHAGNUM PEAT MOSS, TO ONE (1) PART NATURAL COMPOST (WEED-FREE)-COMPLETE WITH 40 LBS NATURAL POULTRY MANURE PER CUBIC YARD. INSTALL 9" MINIMUM DEPTH IN ALL PERENNIAL, GROUNDCOVER, ANNUAL, AND SHRUB BEDS. ALL BEDS MUST BE EXCAVATED, REMOVE AND DISPOSE (OFF-SITE) EXISTING EARTH/SOIL TO ACCEPT PROPOSED PLANT MIXTURE.

4.) PROPOSED SHREDDED HARDWOOD BARK MULCH SHALL BE SEASONED FOR A MINIMUM 6 MONTHS, DARK BROWN IN COLOR, AND INSTALLED 4" DEEP UNDER ALL PROPOSED TREES (INCLUDED IN UNIT COST), 4" DEEP IN ALL SHRUB AND TREE BEDS, AND 3" DEEP IN ALL PERENNIAL/GROUNDCOVER BEDS.

5.) ALL PROPOSED LAWN AND LANDSCAPE AREAS SHALL BE WATERED BY AN AUTOMATICALLY OPERATED SPRINKLER IRRIGATION SYSTEM, COMPLETE WITH SEPERATE LAWN AND SHRUB ZONES. SEE IRRIGATION PLANS.

6.) ALL PROPOSED TREES AND "SPECIMEN" PLANT MATERIAL MUST BE APPROVED BY THE LANDSCAPE ARCHITECT PRIOR TO INSTALLATION AND/OR DELIVERY TO THE SITE.

7.) THE LANDSCAPE CONTRACTOR SHALL KEEP THE STREET AND DRIVE CLEAN AND FREE OF DIRT AND DEBRIS AT ALL TIMES, AND SHALL THOROUGHLY SWEEP AND/OR WASH THE DRIVE AT THE END OF EACH WORK DAY.

8.) THE LANDSCAPE CONTRACTOR SHALL STAKE THE LOCATION OF ALL PROPOSED TREES FOR THE LANDSCAPE ARCHITECT TO APPROVE PRIOR TO PLANTING. THE LANDSCAPE CONTRACTOR SHALL ALSO SET ON-SITE ALL SHRUBS, PERENNIALS, ORNAMENTAL GRASSES, VINES, AND GROUNDCOVERS AS PER PLAN FOR THE LANDSCAPE ARCHITECT TO APPROVE PRIOR TO PLANTING.

9.) ALL DEAD AND UNACCEPTABLE PLANT MATERIALS SHALL BE REPLACED BY THE LANDSCAPE CONTRACTOR DURING THE WARRANTY PERIOD. THE WARRANTY PERIOD SHALL BE TWO (2) YEARS FROM THE ACCEPTANCE OF INSTALLATION ISSUED BY THE LANDSCAPE ARCHITECT.

10.) LANDSCAPED AREAS AND PLANT MATERIALS SHALL BE KEPT FREE FROM REFUSE AND DEBRIS. PLANT MATERIALS, INCLUDING LAWN, SHALL BE MAINTAINED IN A HEALTHY GROWING CONDITION, NEAT AND ORDERLY IN APPEARANCE IN ACCORDANCE WITH THE APPROVED SITE PLAN / LANDSCAPE PLAN. IF ANY PLANT MATERIAL DIES OR BECOMES DISEASED, IT SHALL BE REPLACED WITH 30 DAYS WRITTEN NOTICE FROM THE CITY OR WITHIN AN EXTENDED TIME PERIOD AS SPECIFIED IN SAID NOTICE.

PLANT & MATERIAL SCHEDULE

Qty.	Botanical Name	Common Name	Size	Root	Comments
	Evergreen Trees				
2	Picea abies	Norway Spruce	8-10' ht.	B&B	Unsheared, branched to ground
7	Thuja occidentalis 'Emerald Green'	Emerald Green Arborvitae	7-8' ht.	B&B	Space 30" o.c.
	Deciduous Trees				
4	Acer rubrum 'Frank Jr.'	Redpointe Maple	3-3 1/2" cal.	B&B	Full uniform heads, single stem
6	Betula nigra 'Cully'	Heritage River Birch	8-10' ht.	B&B	Full uniform heads, multi stem
6	Ginkgo biloba 'Princeton Sentry'	Princeton Sentry Ginkgo	2 1/2-3" cal.	B&B	Full uniform heads, single stem
9	Gleditsia triacanthos inermis 'Skyline'	Skyline Thornless Honeylocust	2 1/2-3" cal.	B&B	Full uniform heads, single stem
	Shrubs				
42	Buxus 'Green Velvet'	Green Velvet Boxwood	18-24"	Can	Min. 3 gal., space 24" o.c.
11	Thuja 'Junior Giant'	Junior Giant Arborvitae	7-8' ht.	B&B	Space 36" o.c.
30	Viburnum carlessi 'Cayuga'	Koreanspice Viburnum	30-36"	B&B	Min. 5 gal., space 60" o.c.
	Ornamental Grasses & Groundcover				
98	Liriope spicata	Lilyturf	1 gal.	Can	Space 18" o.c.
373	Pennisetum alopecuroides 'Hamelin'	Hamelin Fountain Grass	1 gal.	Can	Space 36" o.c.
68	Panicum virgatum 'Shenandoah'	Shenandoah Switch Grass	1 gal.	Can	Space 42" o.c.
	Materials				
CS	24 cy.	1/4" - 3/4" dia. Washed Crushed Natural Stone (9A). Install 6" deep on 4 oz. non-woven filter fabric.			
CB	10 cy.	3-4" dia. Washed Cobblestone. Install 12" deep on 4 oz. non-woven filter fabric.			
BOU	3 ea.	3-8' dia. native Michigan natural fieldstone boulders. Set on min. 6" compacted 21AA limestone aggregate base.			
PM	260 cy.	Planting Mix - 3 parts well drained screened imported topsoil, 1 part clean sand, 1 part canadian sphagnum peat moss, 1 part natural compost (weed-free), and 10% poultry manure. Install 9" deep in all landscape beds where specified.			
RE	435 lf.	J.D. Russell Steel Edging (Black) - Install per manufacture specifications, 3/16" thick x 4" deep			
SB	90 cy.	Shredded hardwood bark mulch (seasoned, dark brown). Install 3" deep in all landscape beds.			
SOD	1,560 sy.	Class 'A' blended blue grass sod on min. 3" imported screened topsoil.			

TREE INVENTORY

Tree #	Remove/save	Botanical Name	Common Name	Dia.	Type	Other Dia.	Condition	Comments
1	save	Picea glauca	White Spruce	6"			good	
2	save	Picea pungens	Colorado Blue Spruce	6"			good	
3	save	Picea pungens	Colorado Blue Spruce	6"			good	
4	save	Pinus nigra	Austrian Pine	13"			fair	
5	save	Pinus nigra	Austrian Pine	12"			fair	
6	remove	Picea pungens	Colorado Blue Spruce	12"			good	
7	remove	Malus spp	Crabapple	6"			fair	some deadwood
8	remove	Malus spp	Crabapple	5.5"			good	
9	remove	Malus spp	Crabapple	4"			fair	some deadwood
10	save	Malus spp	Crabapple	5"			poor	
11	save	Pinus nigra	Austrian Pine	12.5"			good	
12	save	Pinus nigra	Austrian Pine	13"			good	
13	save	Gleditsia triacanthos	Honey Locust	4.5"			good	
14	save	Gleditsia triacanthos	Honey Locust	6"			good	
15	save	Gleditsia triacanthos	Honey Locust	10.5"			good	
16	save	Gleditsia triacanthos	Honey Locust	6"			good	
17	save	Gleditsia triacanthos	Honey Locust	11"			good	
18	save	Pinus nigra	Austrian Pine	14"			fair	choked by vines
19	save	Gleditsia triacanthos	Honey Locust	4"			good	
20	save	Pinus nigra	Austrian Pine	14"			good	
21	save	Populus deltoides	Eastern Cottonwood	10"			good	
22	save	Gleditsia triacanthos	Honey Locust	3.5"			good	
23	save	Gleditsia triacanthos	Honey Locust	3.5"			good	
24	save	Gleditsia triacanthos	Honey Locust	5.5"			good	
25	remove	Picea pungens	Colorado Blue Spruce	13"			poor	crowded out
26	remove	Betula nigra	River Birch	4"	triple	4", 4"	poor	close to building
27	save	Gleditsia triacanthos	Honey Locust	3.5"			good	

IRRIGATION NOTES

1. INSTALL UNDERGROUND AUTOMATIC IRRIGATION SYSTEM FOR ALL PROPOSED LAWN AND PLANTING BEDS.
2. USE SEPARATE ZONES FOR LAWN, DECIDUOUS SHRUBS, AND EVERGREEN SHRUBS.
3. WATER SOURCED FROM CITY WATER/ BUILDING TAP
4. OWNER TO DECIDE IRRIGATION CONTROLLER LOCATION.

PLANTING BED NOTES

1. ALL PLANTING BEDS SHALL INCLUDE SPECIFIED PLANTING MIX AT MINIMUM 9" DEPTH:
   3 PARTS WELL DRAINED SCREENED IMPORTED TOPSOIL, TO 1 PART CLEAN SAND, TO 1 PART CANADIAN SPHAGNUM PEAT MOSS, TO 1 PART NATURAL COMPOST (WEED-FREE), AND 10% POULTRY MANURE.
2. ALL PLANTING BEDS SHALL INCLUDE SHREDDED HARDWOOD BARK MULCH (SEASONED, DARK BROWN) AT MINIMUM 4" DEPTH

TREE INVENTORY NOTES

TREE INVENTORY LIST PROVIDED BY NF ENGINEERS

TREE PRESERVATION SUMMARY

TOTAL NUMBER OF TREES SURVEYED:	27
TOTAL NUMBER OF DEAD TREES:	0
NET TREES ON SITE:	27
TOTAL NUMBER OF TREES TO BE REMOVED:	6
TOTAL NUMBER OF TREES TO REMAIN:	21

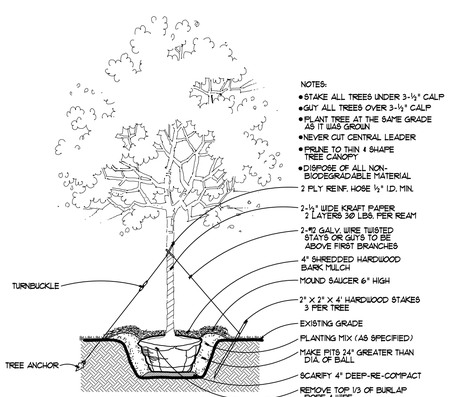

B L2 Deciduous Tree Planting
Section — No Scale

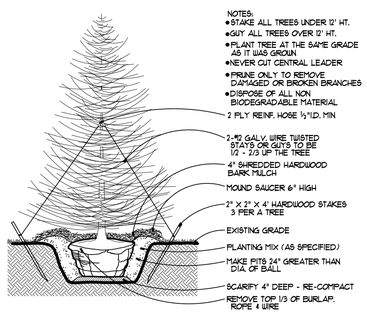

C L2 Evergreen Tree Planting
Section — No Scale

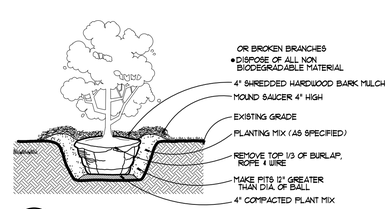

D L2 Shrub Planting
Section — No Scale

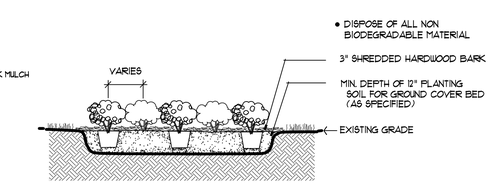

E L2 Ground Cover / Perennial Planting
Section — No Scale

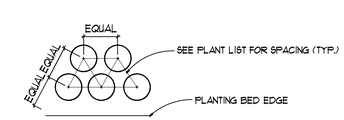

F L2 Ground Cover / Perennial Planting
Plan — No Scale

duL
LANDSCAPE ARCHITECTURE
248.644.3410
duldesign.com

BMW MOTORCYCLE DEALERSHIP
19265 Victor Parkway
Livonia, Michigan 48302

PROJECT

PRELIMINARY

Landscape Development
LANDSCAPE DETAILS

SHEET TITLE

SEE DETAILS

SCALE

PROJECT NUMBER:	25108
DRAWN:	M. Jacobs
CHECKED:	T. Shoemaker
DATE:	March 19, 2025
REVISIONS:	March 31, 2025

L2

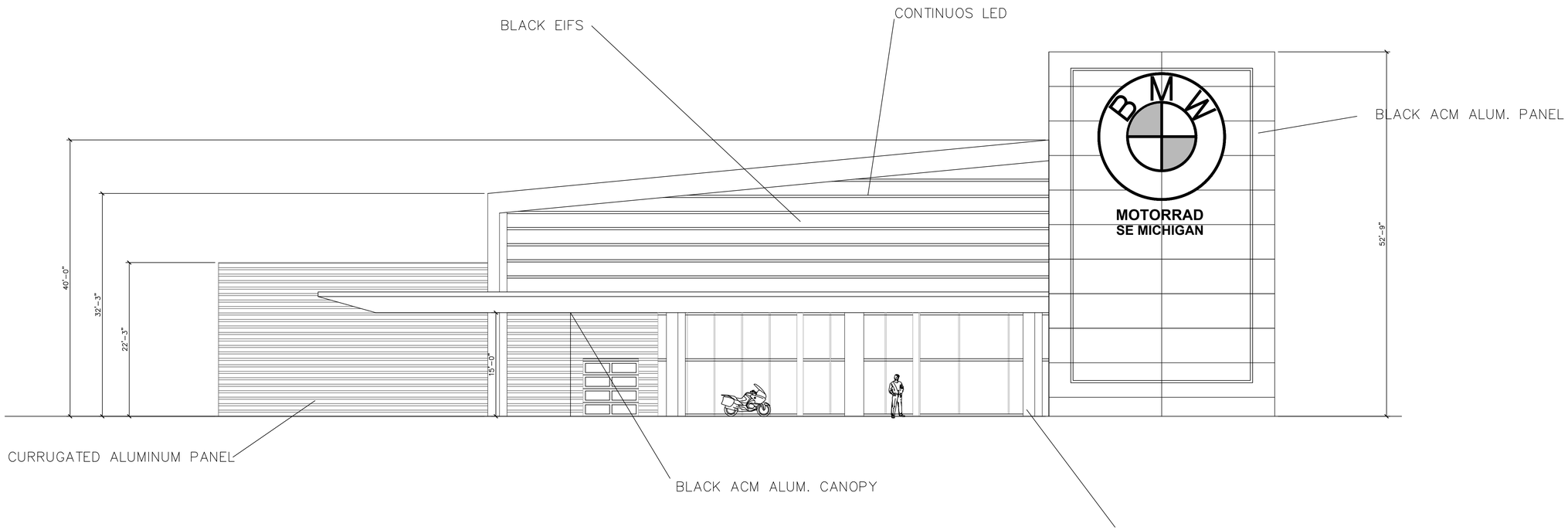

	WEST ELEVATION
1/8" = 1'-0"	ELEV1

1105224 V12

JJV DESIGN GROUP
1565 KIRKWAY RD
BLOOMFIELD MI 48302
248-724-8226

BMW MOTORCYCLES SOUTHEAST MI
19265 VICTOR PKWY
LIVONIA MI
BMW MOTORCYCLE DEALERSHIP

DRAWN:	DESIGNED:	CHECKED:
JJ	JJ	JJ

SCALE : 1/8"=1'

FILE NAME : BMW MOTO

JOB #: 011821

SHEET TITLE
BMW SOUTHEAST MI

EXT ELEV WEST

SHEET #
ELEV1

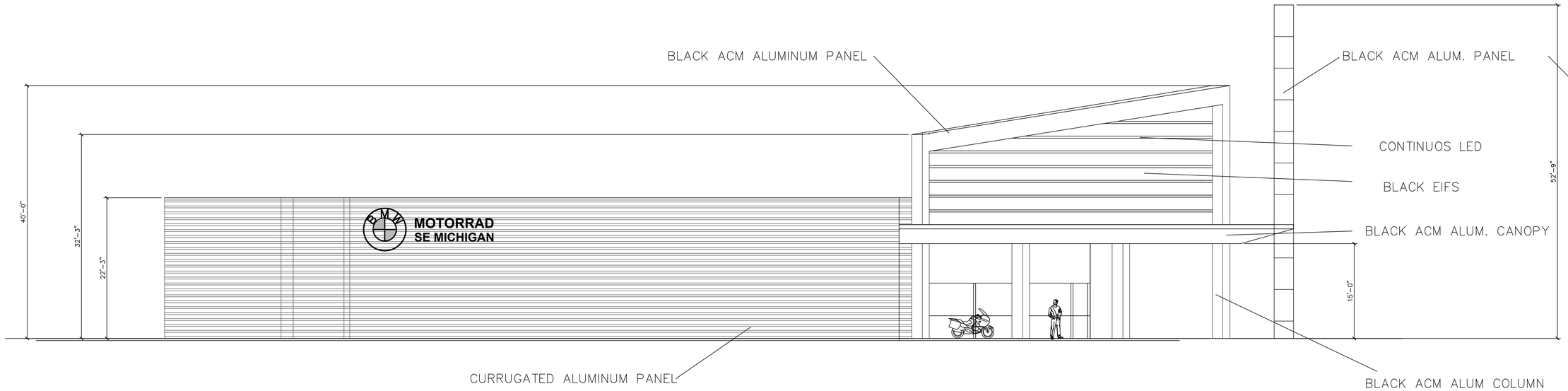

	NORTH ELEVATION
1/8" = 1'-0"	ELEV2

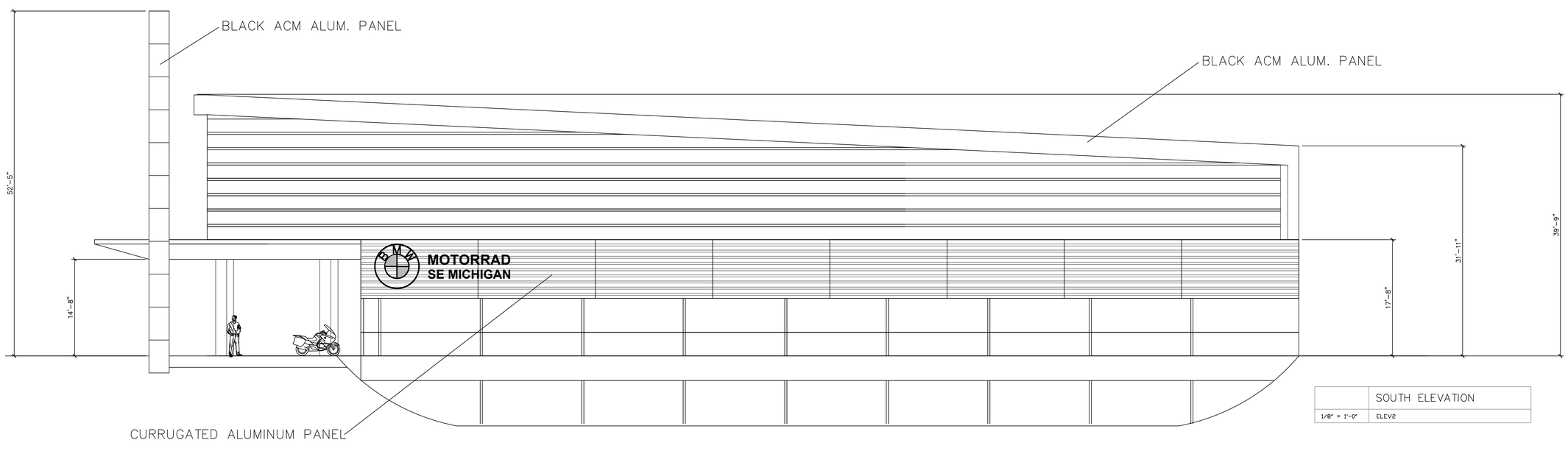

	SOUTH ELEVATION
1/8" = 1'-0"	ELEV2

1105224 V12

JJV DESIGN GROUP
1565 KIRKWAY RD
BLOOMFIELD MI 48302
248-724-8226

BMW MOTORCYCLES SOUTHEAST MI
19265 VICTOR PKWY
LIVONIA MI
BMW MOTORCYCLE DEALERSHIP

DRAWN:	DESIGNED:	CHECKED:
JJ	JJ	JJ

SCALE : 1/8"=1'

FILE NAME : BMW MOTO

JOB #: 011821

SHEET TITLE
BMW SOUTHEAST MI

EXT ELEV

SHEET #
ELEV2

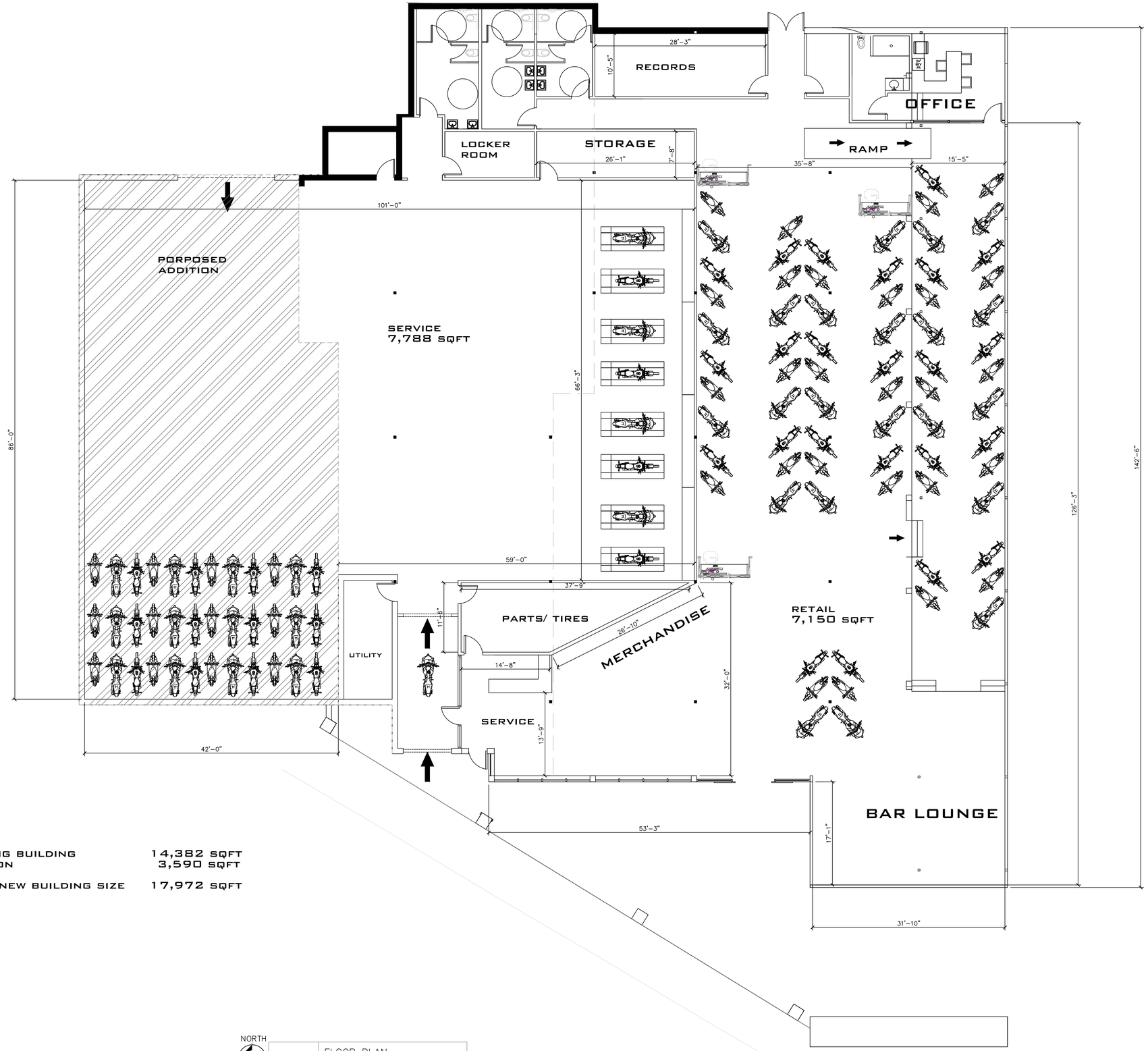

EXISITNG BUILDING	14,382 SQFT
ADDITION	3,590 SQFT
TOTAL NEW BUILDING SIZE	17,972 SQFT

NORTH

	FLOOR PLAN
1/8" = 1'-0"	A100

1105224 V12

JJV DESIGN GROUP
1565 KIRKWAY RD
BLOOMFIELD MI 48302
248-724-8226

BMW MOTORCYCLES SOUTHEAST MI
19265 VICTOR PKWY
LIVONIA MI
BMW MOTORCYCLE DEALERSHIP

DRAWN:	DESIGNED:	CHECKED:
JJ	JJ	JJ

SCALE : 1/8"=1'

FILE NAME : BMW MOTO

JOB #: 011821

SHEET TITLE
BMW SOUTHEAST MI

FLOOR PLAN

SHEET #
A100

CORRESPONDENCE

DEPARTMENT OF PUBLIC WORKS
ENGINEERING DIVISION

TODD J. ZILINCIK, P.E.
CITY ENGINEER

DAVID W. LEAR, P.E.
ASST. CITY ENGINEER

MAUREEN MILLER BROSNAN
MAYOR

DONALD R ROHRAFF
DIRECTOR OF PUBLIC WORKS

12973 FARMINGTON ROAD
LIVONIA, MICHIGAN 48150
(734) 466-2571
FAX: (734) 466-2195

April 4, 2025

Mr. Kristoffer Canty
Planner IV
City of Livonia

Re: Petition 2025-08-08-04 – #19265 Victor Parkway

Dear Mr. Taormina:

In accordance with your request, the Engineering Division has reviewed the above referenced petition. We have no objections to the proposed project at this time, but would like to note the following items:

1. The subject parcel is assigned the address of **#19265 Victor Parkway**. Should additional addresses be needed, the Owner will need to contact this Department once approvals have been obtained.

2. The existing parcel is currently serviced by public sanitary sewer and water main, as well as private storm sewer. The Developer should Engineering drawings and calculations to this department once approvals for the site plans have been received to determine if permits will be required. Based on the submitted drawings, we have the following comments:

   i) Sanitary Sewer: The drawings do not include a basis of design for the proposed sanitary sewer outlet, but we do not believe the change in use will negatively impact the existing system. The developer will be required to clean and televise the existing sanitary sewer lead if it is to be re-used. If the condition is not sufficient for re-use, a new service will need to be installed to the parcel.
   ii) Water Main: The drawings indicate that the existing water service will be re-used for the proposed dealership.
   iii) Storm Sewer: The drawings indicate that the existing private storm system will remain be modified along building frontage. Detention was previously provided for the parcel, so no additional detention will be required.

Should you have any additional questions on this matter, please feel free to contact myself at (734) 466-2608 or the City Engineer, Mr. Todd Zilincik at (734) 466-2561. If you would prefer, you can e-mail either of us at dlear@livonia.gov or tzilincik@livonia.gov.

Sincerely,

David W. Lear, P.E.
Assistant City Engineer

cc: 2025 Petition File

DEPARTMENT OF PUBLIC SAFETY
LIVONIA FIRE & RESCUE

ROBERT JENNISON
FIRE CHIEF

MAUREEN MILLER BROSNAN
MAYOR

14910 FARMINGTON ROAD
LIVONIA, MICHIGAN 48154-5419
734-466-2444
734-466-2082 fax

DATE: **April 10, 2025**

TO: Kristoffer Canty Planner IV

FROM: Livonia Fire Prevention Division

SUBJECT: **Petition #2022-08-08-04 BMW Dealership 19265 Victor Parkway**

This office has reviewed the site plan submitted in connection with a request to construct a commercial building on property located at the above referenced address.

We have no objections to this proposal.

May require permits and plans for fire suppression and fire alarm.

A further detailed plan review will take place when this division receives an official plan set.

Sincerely,

Brian R. Kukla

Brian R. Kukla
Fire Marshal

DEPARTMENT OF PUBLIC SAFETY
DIVISION OF POLICE

THOMAS GORALSKI
CHIEF OF POLICE

MAUREEN MILLER BROSNAN
MAYOR

15050 Farmington Road
Livonia, Michigan 48154-5499
(734) 466-2470
FAX: (734) 261-2265

April 3rd 2025

Mr. Scott Miller
City of Livonia Planning Dept
33000 Civic Center Drive
Livonia, MI 48154

Re: Petitions 2022-08-08-04 – 19265 Victor Parkway

Mr. Miller,

I have reviewed the plans in connection with the petition. I have no objections to the proposals.

Please feel free to contact me, should you have any questions.

Sincerely,

FOR THE CHIEF OF POLICE,

Paul Walters, Sergeant
Traffic Bureau
(734) 466-2107

INSPECTION DEPARTMENT

BUILDING
HEATING
PLUMBING
ELECTRICAL
ZONING
ENVIRONMENTAL PROTECTION
ORDINANCE ENFORCEMENT

MAUREEN MILLER BROSNAN
MAYOR

JEROME A. HANNA
DIRECTOR

33000 CIVIC CENTER DRIVE
LIVONIA, MICHIGAN 48154-3097
(734) 466-2580
FAX: (734) 466-2095

Date: April 21, 2025

To: Kristoffer Canty

From: Jerome Hanna

RE: Petition 2022-08-08-04 BMW Dealership 19265 Victor Parkway Revised

Pursuant to your request, the above-referenced Petition has been reviewed.

1. The existing parking lot and access drive are in disrepair. The access drive and parking area that is intended to be used shall be replaced as necessary.
2. The petitioner's proposal is a change in use. This would require that the proposed space must conform to all current barrier free codes, building codes and all mechanical codes and standards. This will be addressed further at time of plan review if this project moves forward.
3. Signage has not been reviewed. All signage shall conform to the ordinance. A variance from the Zoning Board of Appeals would be required for any non-conforming signage.

This Department has no further objections to this Petition.

I trust this provides the requested information.

Jerome Hanna
Jerome Hanna
Director of Inspection

DEPARTMENT OF FINANCE

Debra Peck Lichtenberg, CPA
DIRECTOR OF FINANCE

Connie Kumpula
CHIEF ACCOUNTANT

MAUREEN MILLER BROSNAN
MAYOR

33000 CIVIC CENTER DRIVE
LIVONIA, MICHIGAN 48154-3097
(734) 466-2260
FAX: (734) 421-1807

April 11, 2025

Kristoffer Canty
Planning Commission
33000 Civic Center Drive
Livonia, MI 48154

Petition 2022-08-08-04 –19265 Victor Parkway

Dear Kristoffer,

I have reviewed the address connected with the above noted petition. The following amounts are due to the City of Livonia:

Unpaid water and sewer charges: (Customer name on record – Future Land Holdings)	$	2,721.87
Total Due City of Livonia	$	2,721.87

Please contact me if you have any further questions.

Very truly yours,

Connie Kumpula
Chief Accountant

CK: sc

Transaction Statement

Service Address

19265 VICTOR PARKWAY
LIVONIA, MI 48152

Mailing Address

FUTURE LAND HOLDINGS
19265 VICTOR PARKWAY
LIVONIA, MI 48152

Account Number	Amount Due
000303625-001	$2,721.87

Account Number	From - Through
000303625-001	10/11/2024 - 04/11/2025

Services

Water & Sewer - Metered

Service Address

19265 VICTOR PARKWAY
LIVONIA, MI 48152

Beginning Balance

$2,875.01

Date	Type	Amount	Description
10/14/2024	Penalty	$86.25	
10/14/2024	Bad Debt	($1,438.16)	Adjustment Reason: Transfer
10/15/2024	Bill	$148.12	Due Date 11/08/2024
11/14/2024	Penalty	$50.14	
11/15/2024	Bill	$148.12	Due Date 12/10/2024
12/16/2024	Penalty	$56.09	
12/17/2024	Bill	$148.12	Due Date 01/10/2025
01/15/2025	Penalty	$62.21	
01/15/2025	Bill	$148.12	Due Date 02/10/2025
02/13/2025	Penalty	$66.65	
02/14/2025	Bill	$148.12	Due Date 03/10/2025
03/13/2025	Penalty	$74.96	
03/14/2025	Bill	$148.12	Due Date 04/10/2025

Total Due

$2,721.87

Transaction Statement

Account Number 000303625-001

Outlook

19265 Victor Parkway

From Nash, Susan M. <snash@livonia.gov>
Date Thu 4/24/2025 12:35 PM
To Planning <Planning@Livonia.gov>

Atten Planning Commission

Unpaid Property taxes are owed on 19265 Victor Parkway
Total owed is
$26,207.55
Payable to Wayne County

Any questions please contact the treasurer office

Susan

Susan Nash
City Treasurer
City of Livonia | Treasurer's Office
(734) 466-2244
snash@livonia.gov

Outlook

FW: 19265 Victor Parkway

From Uhazie, Jacob <juhazie@livonia.gov>
Date Thu 4/24/2025 3:26 PM
To Goff, Erika <egoff@livonia.gov>

1 attachment (62 KB)
livonia taxes.pdf;

Jacob Uhazie
Assistant Planning Director
City of Livonia | Planning Department
(734) 466-2293 | (734) 674-7647
juhazie@livonia.gov

From: cknoll@bmwmotomichigan.com <cknoll@bmwmotomichigan.com>
Sent: Thursday, April 24, 2025 2:50 PM
To: Taormina, Mark <mtaormina@livonia.gov>
Cc: Uhazie, Jacob <juhazie@livonia.gov>; Nash, Susan M. <snash@livonia.gov>
Subject: RE: 19265 Victor Parkway

To all,

These outstanding property taxes were just paid online. See attached receipt.

Best Regards,

Charlie Knoll
BMW Motorcycles of SE Michigan
14855 N Sheldon Rd
Plymouth MI 48170
Tel. (734) 453-0500
Fax (734) 453-0510
Cell (248) 719-4200
cknoll@bmwmotomichigan.com

Payment Receipt

Your payment has been accepted

Confirmation #	WCTTAX1851129689
Payment Type	WCTTAX
Parcel ID	46024990003009
Status	Accepted
Payment Date	Apr 24, 2025 – 2:47:18 PM
Payment Method	American Express **********2004
Payment Amount	$26,207.55
Service Fee	$652.57
Total Amount Charged	$26,860.12
Years	2024
Interest Date	4/1/2025
Mobile	N

OTHER ITEMS RELATED TO THE PETITION

LETTER TO THE LIVONIA CITY COUNCIL

12.

Housing
April 30, 2025

MEETING DATE	PRESENTED BY
S051925/R060225	Madison Bjertness, Executive Director of Housing

AGENDA ITEM

REQUEST FOR APPROVAL OF THE CDBG ANNUAL ACTION PLAN: 2025-2026 COMMUNITY DEVELOPMENT BLOCK GRANT (CDBG) ANNUAL PLAN AND BUDGET; AND REQUEST TO APPROVE HOLD HARMLESS CONTRACTS BETWEEN THE CITY OF LIVONIA AND FIRST STEP, FAIR HOUSING CENTER OF METROPOLITAN DETROIT, WAYNE METROPOLITAN COMMUNITY ACTION AGENCY, CARES IN FARMINGTON, CRUZ CLINIC, STONEBROOK COUNSELING: Livonia Housing Commission, re: in connection with the operation of a domestic violence victim assistance program; for the purpose of providing fair housing; providing utility assistance; and food assistance provided for through the Community Development Block Grant (CDBG) programs for the 2025-2026 program year.

BACKGROUND DETAILS

Enclosed is a report containing an explanation of the CDBG program (Attachment A) and the recommended budget (Attachment B), prepared by the City of Livonia's Office of Community Development, for the use of CDBG funds for the 2024-2025 program year (July 1, 2025 - June 30, 2026).

The Community Development Block Grant (CDBG) Program provides annual grants on a formula basis to states, cities, and counties to develop viable urban communities by providing decent housing and a suitable living environment, and by expanding economic opportunities, principally for low- and moderate-income persons. The program is authorized under Title 1 of the Housing and Community Development Act of 1974, Public Law 93-383, as amended 42 U.S.C. 5301 et seq. The program was designed to reinforce several important values and principles of community development:

• CDBG's flexibility empowers people and communities to design and implement strategies tailored to their own needs and priorities.
• CDBG's emphasis on consolidated planning expands and strengthens partnerships among all levels of government and the private sector in enhancing community development.
• CDBG's technical assistance activities and set-aside for grantees builds the capacity of these partners.

The City of Livonia's CDBG estimated entitlement grant allocation for the 2025-2026 program year is $325,631.00. The National Objectives that will be addressed in the current program year are: to benefit low- and moderate- income (LMI) persons; aid in the prevention or elimination of slums or blight; and to meet a need having a particular urgency. In addition to the national objectives outlined by HUD's CDBG program, the Community Development office also incorporated goals and

objectives from the Livonia Vision 21 Master Plan.

Two long-standing CDBG activities, the Home Improvement Loan Program and Scattered Site Rental Housing Program, generate program income through the repayment of deferred loans and rental income. The importance of the program income is that fifteen percent (15%) of all program income generated in the previous program year plus fifteen percent (15%) of the entitlement grant allocation may be allocated to public service programs identified in Section VI of the attached proposed budget.

The planned public services are: mental health counseling, food assistance through Cares in Farmington, economic development through the peer potential program, assisting those who are survivors of domestic violence, emergency utility assistance, transportation for senior center events, and supporting the City of Livonia's Fair Housing initiative.

In addition to public services, CDBG will continue to offer its residential homeowners minor home repair grants and 0% low interest home improvement loans. This program provides an opportunity for low- and moderate- income families with needed home repairs that they otherwise would not have access to. Also, a partnership with Wayne County utilizing matching funds from the HOME program, the Community Development program will continue to provide opportunities for low- and moderate- income families with homebuyer assistance. This program provides financial resources for closing costs and down payment assistance, making homeownership more attainable.

Furthermore, the Neighborhood Revitalization Program will continue to partner with the Livonia Public School Skilled Trades Program to provide students with hands-on experience in developing skilled trades. Rehabilitated residential properties that are completed through this activity are then sold to low- and moderate- income families, increasing homeownership in Livonia.

PREFERRED COUNCIL RECOMMENDATION/RESOLUTION (Please complete this field. Attachments are not to be used in lieu of the recommendation)

It is respectfully requested that City Council approve the attached Community Development Block Grant (CDBG) 2025-2026 Annual Action Plan adopting the attached resolution. It is also requested that the Council authorize the Director of Housing, Mayor and the City Clerk to execute the contract documents on behalf of the City of Livonia with sub-recipients First Step, Fair Housing Center of Metropolitan Detroit, Wayne Metropolitan Community Action Agency, Cares in Farmington, Cruz Clinic, Stonebrook Counseling.

RESOLVED, THAT WHEREAS, under the provisions of Title I of the Housing and Community Development Act of 1974, as amended, the Secretary of Housing and Urban Development is authorized to make grants to units of local government to help finance community development programs; and

WHEREAS, the primary objective of such Act is the development of viable urban communities by providing decent housing and suitable living environments and expanding economic opportunities, principally for persons of low and moderate income; and

WHEREAS, to obtain its Fiscal Year 2025-2026 entitlement funds under the Community Development Block Grant Program as authorized by the Housing Community Development Act of 1974, the City of Livonia must submit a statement of community development objectives and project use of funds, satisfactory assurances that the Program will be conducted and administered in accordance with appropriate federal and state laws and Department of Housing and Urban Development regulations; and satisfactory assurances that, prior to submission of its Final Statement of Community Development Objectives and Projected Use of Funds, it has (A) provided citizens with adequate information concerning the amount of funds available for proposed community development and housing activities; the range of activities that may be undertaken, the estimated amount of those funds proposed to be used for activities that will benefit low and moderate income persons, and other important program requirements, (B) held a public hearing to obtain the views of citizens on community development and housing needs, and (C) provided citizens an adequate opportunity to examine the content of and to submit comments on the proposed Statement of Community Development Objectives and Projected Use of Funds.

NOW, THEREFORE, BE IT RESOLVED, by the City Council of Livonia, Michigan, that the Final Statement of Community Development Objectives and Projected Use of Funds for the Fiscal Year 2025-2026 Community Development Block Grant Program is hereby approved and shall be submitted to the Department of Housing and Urban Development. Further, the Director of Housing, Mayor/Clerk shall have the authority to execute the sub-recipient contracts.

SPECIFIC NAME OF PRODUCT AND NUMBER TO BE PURCHASED (if more than one)

N/A

CONTRACT: Amount and/or purchase price and length of contract (with dates if applicable)

N/A

DETAILED WORK BEING PERFORMED

N/A

FISCAL CONSIDERATIONS (Amount requested and Account(s) used. If applicable, Grant Funding information)

N/A

ACCEPTANCE OF BID (Please detail the following: Why accepted, why not lowest bidder, company name, contact person, full address)

N/A

REASON TO WAIVE BID PROCESS (Emergency, Professional services, No advantage to City and why, Consortium package, etc): N/A

ATTACHMENTS

1. 25 Public Hearing + Comment Period Notice
2. Action Plan Narrative 25-26
3. Budget 2025-26

APPROVED BY

Madison Bjertness

Date: May 05, 2025

Madison Bjertness, Executive Director of Housing

Debra A. Lichtenberg

Date: May 09, 2025

Debra Peck Lichtenberg, CPA, Finance Director

Date: May 09, 2025

Carter Fisher, City Attorney

Maureen Miller Brosnan

Date: May 09, 2025

Maureen Miller Brosnan, Mayor

LIVONIA HOUSING COMMISSION

MADISON BJERTNESS
EXECUTIVE DIRECTOR

MEMBERS
CARRIE LEACH
ELEANOR MALONE
CONNIE KUMPULA
BRIAN SCOTT

MAUREEN MILLER BROSNAN
MAYOR

COMMUNITY DEVELOPMENT
33780 LYNDON.
LIVONIA, MI 48154
(734) 421-6450

CITY OF LIVONIA ANNUAL ACTION PLAN
2025-2026 COMMUNITY DEVELOPMENT BLOCK GRANT PROGRAM
Public Notice

The City of Livonia is preparing the CDBG Annual Plan 2025 – 2026, proposed use of funds, in anticipation of receiving an estimated $325,631 and $561,000 in potential unprogrammed funds.

PROPOSED USE OF CDBG AND HOME FUNDS

CDBG funds (estimated $325,631; program income $495,411):

- Rehabilitation Projects - $212,684
- Property Acquisition/Rehabilitation - $190,564
- Public Service activities:
  - Mental Health Counseling Program - $12,000
  - First Step – Domestic Violence Program - $25,000
  - Emergency Utility Assistance Program - $7,000
  - Economic Development -$25,000
  - CARES Food Pantry -$25,000
  - Senior Transportation -$28,500
- Maintain/Manage City-Owned Rental Homes - $39,794
- Neighborhood Revitalization Initiative - $100,000
- Public Facilities Improvement/Maintenance -$75,089
- Fair Housing Initiative - $6,000
- Overall Grant Administration - $146,000

Other Program Administration:

- Housing Voucher Program; Family Self-Sufficiency Program
- Silver Village and Newburgh Village Senior Housing
- McNamara Towers Public Housing
- Referrals for low income, homeless and special needs persons for shelter, foreclosure prevention and other services

Funds received less than anticipated will reduce projects:
N/A

CITIZEN PARTICIPATION

EQUAL HOUSING
OPPORTUNITY

Public Hearings: **May 9, 2025,** 3:00 p.m., Silver Village (33780 Lyndon, Livonia MI 48154); **May 12, 2025**, 10:00 a.m., Housing South (10800 Farmington Rd. Livonia, MI 48150). Copies of the 2025-26 Annual Action Plan are available for review, by appointment, between the hours of 8:30 a.m. – 4:00 p.m., Monday through Friday, at the Livonia Housing Commission Community Development Office located at 33780 Lyndon, Livonia MI 48154. Written comments regarding the 2025-26 Annual Action Plan should be emailed to: CDBGComments@livonia.gov. Comments will be received for a period of not less than 30 days, but not after 4:00 p.m. May 31, 2025. The Action Plan will be submitted to the U.S. Department of Housing and Urban Development on or about June 5, 2025.

Madison Bjertness, Executive Director
Maureen Miller Brosnan, Mayor- City of Livonia

Publish: April 29, 2025
City of Livonia website
Livonia City Hall, Livonia Civic Center Library, McNamara Towers, Silver Village, Newburgh Village

EQUAL HOUSING
OPPORTUNITY

ATTACHMENT A: CDBG Proposed 2025-26 Budget Narrative

COMMUNITY DEVELOPMENT BLOCK GRANT (CDBG) PROGRAM

The CDBG program was created by Title I of the Housing and Community Development Act of 1974, as amended. The primary objective of the program is the development of viable urban communities by providing decent housing and a suitable living environment and expanding economic opportunities principally for persons of low- and moderate-low income. Since the City of Livonia has a population of at least 50,000 persons, it is considered an "Entitlement Community". Therefore, Livonia is entitled to receive CDBG funds each year as determined by a formula set forth in the Act. The City of Livonia has participated in the CDBG Program continuously since 1982 and prior to that in 1974 and 1975. The CDBG fiscal year begins July 1 and ends June 30. The 2025-2026 anticipated allocation is $325,631.00 with a program income of $561,000.

Following is an explanation of the activities that are typically funded by the CDBG program in Livonia and administered by the Community Development Office of the Housing Commission:

I. REHABILITATION

Major Home Rehabilitation Loan Program: Provides deferred loans for low- and moderate-low-income owner occupants of single-family homes for the purpose of correcting code violations, weatherization, accessibility improvements and other permanent general improvements. Applications are accepted on a first come, first-serve basis. A lien, in the amount of each loan, is placed on each home undergoing improvement. Loans are offered at 0% interest. The loan becomes due when there is a transfer of title and/or property. When liens are discharged, the proceeds come back to the city in the form of program income and are placed back into the CDBG account to be further utilized in the program. $60,184 plus $100,000 of potential unprogrammed funds is the proposed budget for this activity with the expectation of providing rehabilitation services to 3-5 homes during a program year.

Minor Home Repair Program: Provides grants for minor repairs, including barrier free improvements, insulation, hot water tank replacement, and minor electrical and plumbing repairs, to low- and moderate-low-income owner occupants of single-family homes. Repairs are limited to $10,000 per house, per 7-year period. The objective of this program is to prevent or correct sub-standard conditions, or to remove safety hazards. The homeowner applying for assistance must have lived in the home for one year before applying with Minor Home Repair. This program works closely with the Major Home Rehabilitation Loan Program for cross-referrals. $50,000 is the proposed budget for this activity with the expectation of providing rehabilitation services to 8-12 homes during a program year.

Rehab Inspection: Each home participating in the Major Home Rehabilitation Loan Program will be required to undergo an inspection/risk assessment for lead, radon, and asbestos. City Building Inspectors also perform an electrical, heating, plumbing and building inspection for each property. $2,500 is the proposed budget for this activity.

II. ACQUISITION AND REHABILITATION OF TAX REVERTED PROPERTIES

This activity permits the City of Livonia to acquire tax foreclosed properties from Wayne County. Upon notification by the County through the Treasurer's Office the City/Housing Commission has the right of first refusal to purchase single family homes and vacant parcels of land. Acquisition of the homes will enable the Commission to analyze the properties for acquisition and disposition in the following categories:

- Acquisition of home/property for rehabilitation and resale to low income family;
- Acquisition of home/property for rehabilitation and retention for affordable housing rental;
- Acquisition of home/property for demolition and sale of lot for housing development;
- Acquisition of home/property for demolition and construction of a new home by the LHC for eventual sale or affordable housing rental;
- Acquisition of vacant parcels of land that are non-compliant for development but may be sold or donated to adjacent neighbors;

The primary goal of this activity is to acquire substandard property/lots in primary target areas and return the properties to the City of Livonia tax rolls. A total of $140,564.00 is the proposed budget for this activity with the expectation of acquiring, rehabilitating, and/or demolishing 1-2 homes during a program year. All proceeds from the sale of FROR properties minus costs of maintenance and rehabilitation must be returned to the State of Michigan Treasury.

III. CDBG SCATTERED-SITE RENTAL HOMES

The City has four (4) single-family homes purchased with CDBG funds. The Housing Commission oversees these single-family units which are to be utilized as rental housing for low- and moderate-low-income families as well as other special projects. In order to administer and perform management and maintenance such as plumbing, heating, mechanical and structural improvements to the scattered site homes. $24,794.00 plus additional $15,000 of potential unprogrammed funds is the proposed budget for these activities.

IV. NEIGHBORHOOD REVITALIZATION INITIATIVE

The library aims to provide a book pickup locker area which will be a convenient, contact-free method for residents to access library materials at their convenience. This allows better access for seniors, individuals with disabilities, and families with limited mobility or time restraints. The library is also interested in creating two “Story Walk” paths. Promoting outdoor activity, this combines reading with physical activity by displaying pages of children’s books along a walking path. In partnership with Seedlings Braille Books for Children, braille will be included. These paths will overall be ADA-compliant, making them accessible to all members of the community. The total budget for this activity is $100,000.

V. REHABILITATION OF PUBLIC FACILITIES

This activity includes improvements and maintenance to public services facilities. $75,089 of potential unprogrammed funds is the proposed budget for this activity. The intended activities for this program year may include capital improvements to senior development McNamara Towers.

VI. PUBLIC SERVICES

The various activities eligible under this category are directed to a particular need involving services to low- and moderate-low-income persons and families. The CDBG regulations limit the amount of funds that can be allocated to this activity. Specifically, funding for public services may not exceed 15% of the total CDBG yearly allocation plus Program Income received during the prior year program. Typical Program Income includes (1) Discharged liens from the Major Home Rehabilitation Loan Program, (2) Rent receipts from City-owned homes purchased with CDBG funds, and (3) Minor Home Repair program co-pays. The proposed 2024-2025 budget year public service is $104,000. The public service activities consistently funded during the life of the CDBG program are listed below:

First Step, Western Wayne County Project on Domestic Violence and Sexual Assault: First Step is a non-profit organization that provides assistance to victims of domestic violence and sexual assault. The

services provided by First Step, include; temporary residence, 24 hour crisis line, counseling, information, referral and advocacy in the areas of legal, financial and permanent housing assistance, child care and transportation as well as educational programs. CDBG funds can only be used to provide services to City residents who meet the low- and moderate-low-income criteria. $25,000 is the proposed budget for this activity with the expectation of providing services to approximately 157 citizens.

Wayne Metropolitan Community Action Agency: Wayne Metro is a non-profit organization that provides services to low- and moderate-low-income individuals and families. The Agency will participate in and conduct an expanded program of assistance to the City of Livonia that provides Emergency Utility Assistance services to low- and moderate- income Livonia residents in need of gas, electric, and/or heating fuel utility assistance based on demonstration of need in the form of a "Shut-off" notice received within the last 30 days. Eligible families may receive one time assistance of a maximum of $500 per family for utility payments. $7,000 is the proposed budget for this activity with the expectation of providing services to approximately 15 households.

***Economic Development*:** This program will be administered by the Department of Planning and Economic Development. This money will be used for the Livonia Pure Potential Workforce Development Program (LPPWDP). Livonia companies that hire an apprentice registered through the LPPWDP and pay for their educational requirements will be eligible to apply for a grant for up to $5,000 to reimburse these costs. Companies can use this as a tool to help recruit potential employees and offset the costs associated with taking on an apprentice. The total budget for this activity is $25,000.

Food Pantry: This program will be administered by CARES in Farmington. Residents of the City of Livonia will be provided the opportunity to shop the pantry and select food items once a month. Additionally, there may be a mobile component added on in the future so residents do not have to travel to the facility. The total budget for this activity is $25,000.

Mental Health Counseling: This program will be administered by Cruz Clinic and Stonebrook Counseling. This funding will provide residents with up to five sessions of counseling. The total budget for this activity is $12,000.

Senior Transportation: The Parks and Recreation Department is renting a 2025 Champion Challenger, a vehicle equipped with ADA-compliant features. This rental will enable the department to provide accessible and reliable transportation for all senior participants, regardless of mobility challenges.

VII. PLANNING AND ADMINISTRATION

Overall program planning and administration is provided by the Housing Commission and financial administration is provided by the Finance Department. Various other planning projects fall under the category of Planning and Administration such as the Fair Housing Initiative. The Fair Housing Center of Metropolitan Detroit is contracted to provide services such as educational programs, fair housing training for City staff, landlords and realtors, fair housing counseling and complaint reception to citizens and/or potential citizens of Livonia. To receive CDBG funds on an annual basis, the City has to submit an application on or before May 15 after conducting two (2) public hearings and submitting the program to the City Council for its approval. Each year, during January, the CDBG Committee prepares a suggested

CDBG budget for the next program year based on requests made by various City departments and non-profit organizations. The budget is then discussed with the Mayor, revised if necessary, and presented at a public hearing for public comment. A second public hearing is held and if deemed necessary, revisions are made, with a final version of the budget submitted to City Council for approval. Required Environmental Assessments regarding the various planned activities are prepared, public notification is published and the necessary application materials are then sent to the Department of Housing and Urban Development no later than May 15. At the conclusion of the program year, a "Consolidated Annual Performance and Evaluation Report" is prepared and sent to HUD. The total proposed budget for Planning & Administration, Accounting Services and Fair Housing Initiatives is $148,000.

NATIONAL OBJECTIVES: Each CDBG program expenditure must be qualified according to one of three National Objectives: (1) benefit low- and moderate-low-income persons; (2) prevent or eliminate slums and blight; and, (3) meet an urgent community need. At least 70% of the expenditures must benefit low- and moderate-low-income persons.

CONSOLIDATED PLAN: To become an entitlement jurisdiction the City must submit a Consolidated Plan to HUD once every five years. The Consolidated Plan is a comprehensive document which functions as a planning tool for cities and other governmental units to meet community development goals and to serve as a consolidated way of applying for federal funds under several formula grant programs offered by the Department of Housing and Urban Development (HUD). The Consolidated Plan consists of a Housing Market Analysis, Housing and Homelessness Needs Assessment, the development of Strategies, Priority Needs and Objectives, an Annual Action Plan and, finally, a section that contains required certifications.

The Consolidated Plan has four basic functions: (1) to serve as a planning document utilizing a system of consultation with public and private agencies and groups, (2) to serve as an application for federal funds, (3) to serve as a strategy for achieving program objectives, and (4) to produce an Annual Action Plan to carry out the various planned activities and assess performance. The latest Consolidated Plan, which is prepared by the Housing Commission, covers the period of 2021-2026.

ATTACHMENT B: CDBG PROPOSED 2024-2025 BUDGET ALLOCATION

ACTIVITIES	*CURRENT YR 2024-2025 (Includes Unprogrammed Funds)*	PROPOSED Entitlement FUNDING 2025-26 Program Year	+	Potential Unprogrammed Funds[1]	=	TOTAL FUNDING 2025-2026 PROGRAM YEAR
I. Rehabilitation						
A. Major Home Rehab	$ 160,184.00	$ 60,184.00		$ 100,000.00		$ 160,184.00
B. Minor Home Repair	$ 50,000.00	$ 50,000.00				$ 50,000.00
C. Rehab Inspection	$ 2,500.00	$ 2,500.00				$ 2,500.00
SUBTOTAL	$ 212,684.00	**$ 112,684.00**		**$ 100,000.00**		**$ 212,684.00**
II. Acquisition of Tax-Reverted Properties						
A. Acquisition for Real Property	$ 65,564.00	$ 27,564.00		$ 38,000.00		$ 65,564.00
B. Acquistion for Rehab	$ 50,000.00			$ 100,000.00		$ 100,000.00
C. Acquisition for Clearance and Demo	$ 25,000.00			$ 25,000.00		$ 25,000.00
SUBTOTAL	$ 140,564.00	**$ 27,564.00**		**$ 163,000.00**		**$ 190,564.00**
III. CDBG Scattered-Site Rental Homes						
A. Maintenance of (4) Scattered-Site SF Homes i.e. mechanical, heating, plumbing, structural improvements (#832)	$ 35,000.00	$ 10,000.00		$ 15,000.00		$ 25,000.00
B. Management of (4) Rental Homes (#833)	$ 14,794.00	$ 14,794.00				$ 14,794.00
SUBTOTAL	$ 49,794.00	**$ 24,794.00**		**$ 15,000.00**		**$ 39,794.00**
IV. Neighborhood Revitalization	**$ -**					$ –
A. Lighting, Parks, Landscaping, and Infrastructure Improvements, Commercial / Residential Blight Reduction, and Feasibility / Planning Studies	$ 200,000.00			$ 100,000.00		$ 100,000.00
SUBTOTAL	$ 200,000.00	**$ -**		**$ 100,000.00**		**$ 100,000.00**
V. Public Facilities	**$ -**					$ –
A. Improvements & Maintenance of Public Services Facilities	$ -			$ 75,089.00		$ 75,089.00
SUBTOTAL	$ 80,589.00	**$ -**		**$ 75,089.00**		$ 75,089.00

VI. Public Services [2]	**$ -**					$ –
A. Mental Health Counseling	*$ 2,000.00*	$ 6,000.00		$ 6,000.00		$ 12,000.00
B. First Step	*$ 25,000.00*			$ 25,000.00		$ 25,000.00
C. Emergency Asst. Program	*$ 5,000.00*	$ 7,000.00				$ 7,000.00
D. Economic Development	*$ 15,000.00*	$ 1,589.00		$ 23,411.00		$ 25,000.00
E. CARES	*$ 10,000.00*	$ 20,000.00		$ 5,000.00		$ 25,000.00
F. Senior Transportation		$ 10,000.00		$ 18,500.00		$ 28,500.00
SUBTOTAL	*$ 57,000.00*	***$ 44,589.00***		***$ 77,911.00***		**$ 122,500.00**
VII. Planning & Administration[3]	**$ -**					$ –
A. Planning & Admin.	*$ 65,000.00*	$ 65,000.00				$ 65,000.00
B. Accounting Services	*$ 18,000.00*	$ 10,000.00				$ 10,000.00
C. Fair Housing Initiative	*$ -*	$ 6,000.00				$ 6,000.00
D. Rehab Administration	*$ 65,000.00*	$ 35,000.00		$ 30,000.00		$ 65,000.00
SUBTOTAL	*$ 148,000.00*	***$ 116,000.00***		***$ 30,000.00***		$ 146,000.00
GRAND TOTAL	*$ 886,631.00*	**$ 325,631.00**		**$ 561,000.00**		**$ 886,631.00**

LETTER TO THE LIVONIA CITY COUNCIL

13.

Parks and Recreation
April 22, 2025

MEETING DATE	PRESENTED BY
S051925/R060225	Ted Davis, CPRP, Superintendent of Parks and Recreation

AGENDA ITEM

REQUEST TO APPROVE AN INTERGOVERNMENTAL AGREEMENT BETWEEN THE CHARTER COUNTY OF WAYNE AND THE CITY OF LIVONIA: Department of Parks and Recreation, re: for a grant of $140,519 to be used toward the redevelopment of Shelden Park.

BACKGROUND DETAILS

The Department of Parks and Recreation respectfully requests your approval to enter into an Intergovernmental Agreement with Wayne County for a grant of $140,519 to be used toward the redevelopment of Shelden Park. The proposed site plan is attached.

These agreements are for 2024/25. We hope to complete the project in calendar year 2026. Projects will be completed with City funds and then reimbursed by the County. The total cost of the project is projected to be $5,000,000, with additional monies contributed through donations and outside funding.

PREFERRED COUNCIL RECOMMENDATION/RESOLUTION (Please complete this field. Attachments are not to be used in lieu of the recommendation)

We ask Council to authorize the Mayor and City Clerk to execute these contracts, which have been approved as to form by the City Attorney, on behalf of the City of Livonia.

SPECIFIC NAME OF PRODUCT AND NUMBER TO BE PURCHASED (if more than one)

N/A

CONTRACT: Amount and/or purchase price and length of contract (with dates if applicable)

$140,519

DETAILED WORK BEING PERFORMED

To be used toward redevelopment of Shelden Park.

FISCAL CONSIDERATIONS (Amount requested and Account(s) used. If applicable, Grant Funding information)

Projects will be completed with City funds and then reimbursed by the County in an amount not to exceed $140,519.

ACCEPTANCE OF BID (Please detail the following: Why accepted, why not lowest bidder, company name, contact person, full address)

N/A

REASON TO WAIVE BID PROCESS (Emergency, Professional services, No advantage to City and why, Consortium package, etc): N/A

ATTACHMENTS

1. S051925 LTC Shelden Park grant
2. 2025 Shelden Park DPS Park Millage IGA-City of Livonia-4-17-2025

APPROVED BY

Date: April 22, 2025

Ted Davis, CPRP, Superintendent of Parks and Recreation

Date: April 23, 2025

Debra Peck Lichtenberg, CPA, Finance Director

Date: April 23, 2025

Carter Fisher, City Attorney

Date: April 24, 2025

Maureen Miller Brosnan, Mayor

AGREEMENT

between

THE CHARTER COUNTY OF WAYNE

and

THE CITY OF LIVONIA

for

Improvements to

SHELDEN PARK

FY 2024-2025

TABLE OF CONTENTS

1. PURPOSE 1
2. SCOPE OF THE PROJECT 1
3. TERM OF CONTRACT 1
4. COUNTY'S COVENANTS 1
5. CITY'S COVENANTS 1
6. TERMINATION 2
7. DATA TO BE FURNISHED 3
8. ADMINISTRATION 3
9. RELATIONSHIP OF PARTIES 4
10. INSURANCE 4
11. HOLD HARMLESS 4
12. LIABILITY 4
13. ENVIRONMENTAL MATTERS 4
14. COMPLIANCE WITH LAWS 6
15. AMENDMENTS 6
16. NONDISCRIMINATION PRACTICES 6
17. ETHICS IN CONTRACTING 8
18. NOTICES 8
19. WAIVER OF ANY BREACH 8
20. SEVERABILITY OF PROVISIONS 9
21. MERGER CLAUSE 9
22. JURISDICTION AND LAW 9
23. MISCELLANEOUS 9
24. AUTHORIZATION AND CAPABILITY 10
25. SIGNATURE 10

EXHIBIT A: LEGAL DESCRIPTIONS A-1
EXHIBIT B: PROJECT DESCRIPTIONS B-1
EXHIBIT C: SIGNAGE SPECIFICATIONS C-1
EXHIBIT D: INSURANCE COVERAGES D-1

THIS AGREEMENT ("Agreement") is between the County of Wayne, Michigan, a public body corporate and Home Rule Charter County, acting through its Department of Public Services, Parks Division (hereinafter the "County") and the City of Livonia, a Michigan municipal corporation (hereinafter "City").

1. PURPOSE

1.01 The County and City have an interest in entering into cooperative parks and recreation projects that are mutually beneficial to the citizens of Wayne County.

2. SCOPE OF THE PROJECT

2.01 The County will cooperatively fund the construction of improvements (the "Project") at Shelden Park, located in the City (individually, "Site" or collectively, "Sites"), for the citizens of Wayne County, at the location(s) described in **Exhibit A** attached hereto and made a part hereof. The County will finance any improvements agreed upon by the Chief Executive Officer for the County or his/her designee and the Mayor of the City or his/her designee, in creation of the Project under the limitations indicated in Sections 3, 4 and 5.

3. TERM OF CONTRACT

3.01 The term of this Agreement shall commence upon approval by the Wayne County Commission and **shall terminate on September 30, 2027 at 11:59 p.m.**

3.02 If City fails to complete the Project by the termination date as stated in Section 3.01, the parties agree that the County shall be under no further obligation to provide any remaining funds committed hereunder.

4. COUNTY'S COVENANTS

4.01 The County will assist in funding construction of the Project described in **Exhibit B** attached hereto and made a part hereof. The FY 2024-2025 funding provided by the County for the recreational Project **shall not exceed One Hundred Forty Thousand Five Hundred Nineteen Dollars ($140,519).**

5. CITY'S COVENANTS

5.01 Prior to construction of any portion of the Project, City shall provide the County with documents evidencing title to each Site, including, but not limited to, deeds, assignments, leases, land contracts, and mortgage instruments. The documents must specify all covenants, restrictions, easements, or other encumbrances on each Site.

5.02 City warrants that it is the legal owner with good, valid, and clear title to each Site and that each Site is accurately described in **Exhibit A**. City shall hold harmless and defend the County against any claims, demands, penalties, fines, liabilities, settlements, damages, costs or expenses, including but not limited to, court costs and litigation expenses, known or unknown, contingent or otherwise, arising out of or in any way related to an action by a third party to quiet title in any Site described in **Exhibit A**.

5.03 City shall keep accurate records and account of the Project costs that shall be accessible for inspection and audit by a representative of the County.

5.04 City shall submit to the County no more frequently than once every 30 days, a certified application for reimbursement of acceptable Project costs together with all contractor and

subcontractor certified invoices and any required supporting documentation for reimbursement, which shall be made upon receipt and approval of the application for reimbursement. The County is under no obligation to reimburse City for any unapproved costs or costs outside the scope of this Agreement.

5.05 City shall be responsible for financing the Project beyond the financial commitment the County has made as indicated in Section 4.01.

5.06 City shall operate and maintain improvements for public recreation, and that it shall allow each park to be open to the public on equal and reasonable terms and that no individual shall be denied ingress or egress thereto or the use thereof on the basis of sex, race, color, religion, national origin, residence, age or handicap.

5.07 City agrees that in consideration of the financial commitment that the County is providing for the Project, City shall operate each Site as a recreational facility for no less than ten (10) years after the Project is completed.

5.08 City will develop signage at its own expense, which recognizes the County as a donor at each Site. The signage shall comply with the specifications described in **Exhibit C** attached hereto and made a part hereof. The County shall have the right to approve the signage. Such approval will not be unreasonably withheld or delayed. City shall install the signage prior to the Project's completion.

5.09 City agrees to provide the County with an opportunity to participate in planning any press conference, ribbon cutting ceremony, opening ceremony, or other public/media announcement related to the Project ("media event"). City further agrees to provide the County with no less than thirty (30) days prior written notice of a proposed media event.

5.10 Breach of any of the provisions contained in this Article may be regarded as a material breach of this Agreement.

6. TERMINATION

6.01 This Agreement can be terminated by either party with or without cause upon thirty (30) days written notice, prior to commencing construction. If terminated prior to commencing construction of the Project, each party is solely responsible for its own costs, fees, and obligations incurred prior to the termination.

6.02 After the Project's construction is commenced, the County may terminate this Agreement with or without cause and shall be responsible for expenses previously approved by the County and incurred by City, not to exceed the amount stated in Section 4.01.

6.03 City may terminate this Agreement, with or without cause, after construction is commenced and shall return to the County any funding provided by the same under this Agreement.

6.04 This Agreement shall terminate if any Site is not operational and regularly open to the public.

7. DATA TO BE FURNISHED

7.01 City must maintain copies of all information, books, data, reports, records, etc., related to the Project. Such information and records shall be maintained for a period of three (3) years from the date City receives its final reimbursement payment under this Agreement.

7.02 Upon the request of the County or its authorized representative, including its Legislative Auditor General, City must furnish, without charge, copies of all information, books, records, data, reports, etc., of City, or any contractors, subcontractors, consultants or agents rendering or furnishing services under this Agreement, whether direct or indirect, that will permit adequate evaluation or audit of the services provided by City or any of its contractors, subcontractors, consultants or agents. City must include a similar covenant allowing for County audit in any agreement it has with a contractor, subcontractor, consultant or agent related to this Agreement. The County may delay reimbursement payments to City pending the results of any such audit without penalty or interest.

7.03 The County may schedule conferences at mutually convenient times with City administrative personnel to gather the information. If, as a result of any audit conducted by or for the County relating to City's performance under this Agreement, a discrepancy should arise as to the amount of compensation due City, City shall pay to the County on demand the amount of compensation in question. If City fails or refuses to make payment, in addition to other legal remedies available to the County, the County may retain said amount from any funds allocated to City but not yet disbursed under this Agreement or may offset such a deficiency against the compensation to be paid City in any concurrent, successive or future agreements between the parties.

7.04 City further acknowledges the right of the Wayne County Commission as a third-party beneficiary of this Agreement to sue for specific performance to enforce the audit rights provided herein for the Legislative Auditor General.

8. ADMINISTRATION

8.01 City must inform the County as soon as the following types of conditions become known:

A. Probable delays or adverse conditions which do or may materially prevent meeting the objectives of this Agreement, including changes, transfer, or assignment of any real property interest related to any Site;

B. Favorable developments or events that enable meeting time schedules or goals sooner than anticipated; or

C. Any changes or modifications in appropriations and funding for the Project.

9. RELATIONSHIP OF PARTIES

9.01 The parties are independent entities. No liability or benefits, such as Workers' Compensation, pension rights, or insurance rights, arising out of, or related to a contract for hire or employer/employee relationship, accrues to either party or either party's agents, contractors, subcontractors, or employees as a result of this Agreement. No relationship, other than that of independent contractor will be implied between the parties, or either party's agents, employees, contractors, or subcontractors.

10. INSURANCE

10.1 City will require that all contractors undertaking work on the Project abide the terms, and provide insurance coverage in said amounts, as set forth in **Exhibit D**.

10.2 All insurance and bonds shall name the Charter County of Wayne and the City as insured or beneficiary.

11. HOLD HARMLESS

11.01 City agrees to remain responsible for its own negligence, or tortious acts, errors, or omissions, and the acts, errors, or omissions of any of its employees, contractors, subcontractors, consultants, or agents. It is agreed that the County is merely acting as a funding source for the Project and that any negligence, or tortious acts, errors, or omissions on the part of the County shall only arise out of providing these funds or processing reimbursement requests made by City as submitted pursuant to Section 5.04.

11.02 This hold harmless provision must not be construed as a waiver of any governmental immunity by the County or City or any of their agencies, or employees, as provided by statute or modified by court decisions.

12. LIABILITY

12.01 The County does not assume and is not responsible for, payment of any debt service, lien, or encumbrance, including, but not limited to, mortgage, promissory note, land contract, or other obligation, incurred prior to the signing or during the term of this Agreement.

12.02 This Agreement is not intended to create beneficial rights in any third party other than the Wayne County Commission. This Agreement is entered into for the sole benefit of the parties to this Agreement.

13. ENVIRONMENTAL MATTERS

13.01 City warrants to the County that City will not use Hazardous Materials (as defined in Section 13.06) at any Site in violation of any governmental regulation pertaining to the use, storage, treatment, transportation, manufacture, refinement, handling, production or disposal of Hazardous Materials.

13.02 City warrants that it is not in violation of governmental regulations pertaining to the use, storage, treatment, transportation, manufacture, refinement, handling, production or disposal of Hazardous Materials at any Site, and, to the best of City's knowledge, there have been no actions commenced or threatened by any party for noncompliance which affects a Site.

13.03 City will keep each Site free of Hazardous Materials except to the extent that the Hazardous Materials are stored or used in compliance with applicable local, state and federal

regulations. City must not cause or permit any Site to be used to generate, manufacture, refine, transport, treat, store, handle, dispose of, transfer, produce, or process Hazardous Materials, except in compliance with governmental regulations. City shall not cause or permit, as a result of any intentional or unintentional act or omission on the part of City, any tenant, subtenant or occupant, the release, spill, leak or emission of Hazardous Materials at any Site or onto any other contiguous property.

13.04 Prior to commencing the Project, City must conduct and complete or cause to be conducted and completed an investigation, including a comprehensive environmental audit, studies, sampling, and testing, as the County deems necessary. A copy of any environmental audit, study, sampling or testing shall be provided to the County within ten (10) working days of City's receipt of such audit, study, sampling or testing. If the audit reveals the existence of any Hazardous Material at any Site, City shall immediately disclose the findings to the County. If the County decides to proceed with the Project, City shall do or cause to be done all remedial, removal and other actions necessary to clean up and remove all Hazardous Materials on, under, from or affecting the Site as required by all applicable governmental regulations, to the satisfaction of the County, and according to all federal, state and local governmental authorities. Any audit conducted by the County is solely for the benefit, protection, and interest of the County. City or any third party cannot rely upon the audit conducted by the County for any purpose.

13.05 It is agreed that the County is merely acting as a funding source for the Project and that the County shall only be responsible for providing these funds and processing reimbursement requests made by City as submitted pursuant to Section 5.04. Therefore, the County shall not be responsible for any claims, demands, penalties, fines, liabilities, settlements, damages, costs or expenses, including attorney and consultant fees, investigation and laboratory fees, court costs and litigation expenses, known or unknown, contingent or otherwise, arising out of or in any way related to:

A. The presence, disposal, release or threatened release of any Hazardous Materials on, over, under, from or affecting the Site or the soil, water, vegetation, buildings, personal property, persons or animals;

B. Any personal injury (including wrongful death) or property damage (real or personal) arising out of or related to Hazardous Materials at a Site;

C. Any lawsuit brought or threatened, settlement reached or government order relating to the Hazardous Materials with respect to a Site;

D. Any violation of laws, orders, regulations, requirements or demands of government authorities, or any policies or requirements of any mortgage, which are based on or related to the Hazardous Materials used at a Site;

E. This section applies to the presence, disposal, release, leakage, or threatened release of any Hazardous Materials prior to the effective date of this Agreement.

13.06 Hazardous Material means any material or substance:

A. Which is or becomes defined as a hazardous substance, pollutant, or contaminant pursuant to the Comprehensive Environmental Response, Compensation and Liability Act (42 U.S.C. 9601 et. seq.) and any amendments thereto and regulations pursuant thereto;

B. Containing gasoline, oil, diesel, fuel, or other petroleum products;

C. Which is or becomes defined as hazardous waste pursuant to the Resource Conservation and Recovery Act (42 U.S.C. 6901 et. seq.) and any amendments thereto and regulations pursuant thereto;

D. Containing polychlorinated biphenyl;

E. Containing asbestos;

F. Which is radioactive;

G. The presence of which requires investigation or remediation under any governmental regulation; or

H. Which is or becomes defined as a hazardous waste, hazardous substance, pollutant, contaminant, or biologically hazardous material under any governmental regulation.

14. COMPLIANCE WITH LAWS

14.01 Each party must comply with and must require its employees to comply with all applicable laws and regulations.

14.02 City must construct and develop the Project or cause the Project to be constructed and developed according to applicable local, state and federal laws.

15. AMENDMENTS

15.01 No amendment to this Agreement is effective unless it references this Agreement, is written and signed by duly authorized representatives of both parties and approved by resolutions adopted by the Livonia City Council and the Wayne County Commission.

16. NONDISCRIMINATION PRACTICES

16.01 City shall require that all contractors, subcontractors, consultants and agents retained to perform work related to this Agreement comply with:

A. Titles VI and VII of the Civil Rights Act (42 U.S.C. §§ 2000d et. seq.) and the United States Department of Justice Regulations (28 C.F.R. Part 42) issued pursuant to these Titles.

B. The Age Discrimination Act of 1985 (42 U.S.C. §6101-07).

C. Section 504 of the Rehabilitation Act of 1973 (29 U.S.C. §794).

D. The Americans with Disabilities Act of 1990 (42 U.S.C. §12101 et. seq.) and its associated regulations.

E. The Elliot-Larson Civil Rights Act (P.A. 1976 No. 453)

F. The Persons With Disabilities Civil Rights Act (P.A. 1976 No. 220).

G. The anti-discrimination provisions as required by Section 120-192 of the Wayne County Code of Ordinances.

16.02 All contractors, subcontractors, consultants and agents retained by City to perform work related to this Agreement shall not:

A. Refuse to recruit, hire, employ, promote or to bar or discharge from employment an individual, or discriminate against an individual in compensation, terms, conditions or privileges of employment because of race, color, creed, national origin, age, marital status, handicap, sex, religion, familial status, height or weight.

B. Limit, segregate, or classify an employee or applicant for employment in a way which deprives or tends to deprive any individual of employment opportunities or otherwise adversely affects the employment status of an employee because of race, color, creed, national origin, age, marital status, handicap, sex, familial status, height or weight.

C. Print or publish or cause to be printed or published a notice, application, or advertisement relating to employment indicating a preference, limitation, specification, or discrimination based upon race, color, creed, national origin, age, marital status, handicap, sex, religion, familial status, height or weight.

D. Except as permitted by rules and regulations promulgated pursuant to Section 120-192 of the Wayne County Code of Ordinances, or applicable state or federal law, make or use a written or oral inquiry or form of application that elicits or attempts to solicit information concerning the race, color, creed, national origin, age, marital status, handicap, sex, religion, familial status, height or weight, of prospective employees. City also shall not make or keep a record of that information or disclose such information.

E. Make or use a written or oral inquiry or form of application that expresses a preference, limitation or specification based on religion, race, color, creed, national origin, age, height, weight, marital status, handicap, or sex.

16.03 City agrees that it will notify all of its contractors, subcontractors, consultants, or agents of their obligations relative to non-discrimination under this Agreement when soliciting the contractor, subcontractor, consultant, or agent. City will include the provisions of this Article in any contract, as well as provide the County with a copy of any agreement with a contractor, subcontractor, consultant, or agent completing work related to this Agreement.

16.04 All contractors, subcontractors, consultants and agents retained by City to perform work related to this Agreement shall not discriminate against any employee or applicant for employment, training, education, or apprenticeship connected directly or indirectly with the performance of this Agreement, with respect to hire, promotion, job assignment, tenure, terms, conditions or privileges of employment because of race, color, creed, national origin, age, marital status, handicap, sex, religion, familial status, height or weight. This Section does not apply if it is determined by the County Division of Human Relations that the requirements are bona fide occupational qualifications reasonably necessary to perform the duties required for employment. The burden of proof that the occupational qualifications are bona fide is upon City.

16.05 Breach of any of the covenants in this Article may be regarded as a material breach of this Agreement.

16.06 City acknowledges the right of the County Director of Human Relations to sue to enforce the provisions in this Article.

16.07 If City or any of its contractors, subcontractors, consultants, or agents does not comply with the non-discrimination provisions of this Agreement, the County may impose sanctions, as it determines to be appropriate, including but not limited to the cancellation, termination or suspension of this Agreement, in whole or in part.

16.08 In the event that City is or becomes subject to federal or state law which conflicts with the requirements of Section 120-192 of the Wayne County Code of Ordinances, the provisions of federal or state law shall apply and this Agreement shall be interpreted and enforced accordingly. In accordance with the Elliot-Larson Civil Rights Act, P.A. 1976 No. 453, as amended, MCL 37.2101 *et seq*., City covenants not to discriminate against an employee or applicant for employment with respect to hire, tenure, terms, conditions, or privileges of employment because of race, color, religion, national origin, age, sex, weight, height, or marital status, and to require a similar covenant on the part of any contractor, subcontractor, consultant, or agent employed in the performance of this Agreement.

17. ETHICS IN CONTRACTING

17.01 City and all of its contractors must comply with Article 12 of Chapter 120 of the Wayne County Code of Ordinances governing "Ethics in Public Contracting" or any similarly existing City ordinances.

18. NOTICES

18.01 All notices, consents, approvals, requests and other communications ("Notices") required or permitted under this Agreement must be given in writing and mailed by first-class mail and addressed as follows:

If to City:
Department of Parks & Recreation
City of Livonia
15100 Hubbard
Livonia, Michigan 48154

If to the County:
Director of Parks
Wayne County Parks
33175 Ann Arbor Trail
Westland, Michigan 48185
and
Director
Wayne County Department of Public Services
400 Monroe, Suite 300
Detroit, Michigan 48226

18.02 All notices are deemed given on the day of mailing. Either party to this Agreement may change its address for the receipt of notices at any time by giving notice to the other as provided. Any notice given by a party must be signed by an authorized representative of such party.

18.03 Termination notices, change of address notices, and other notices of a legal nature, are an exception and must be sent by registered or certified mail, postage prepaid, return receipt requested.

19. WAIVER OF ANY BREACH

19.01 No failure by a party to insist upon the strict performance of any term of this Agreement or to exercise any term after a breach constitutes a waiver of any breach of term. No

waiver of any breach affects or alters this Agreement, but every term of this Agreement remains effective with respect to any other then existing or subsequent breach.

20. SEVERABILITY OF PROVISIONS

20.01 If any provision of this Agreement or the application to any person or circumstance is, to any extent, judicially determined to be invalid or unenforceable, the remainder of this Agreement, or the application of the provision to persons or circumstances other than those as to which it is invalid or unenforceable, is not affected and is enforceable.

21. MERGER CLAUSE

21.01 This Agreement, including the Exhibits contains the entire agreement between the parties and all prior negotiations and agreements are merged in this document. Neither party has made any representations except those expressly set forth in this Agreement. No rights or remedies are, or will be acquired by either party by implication or otherwise unless set forth herein.

21.02 This Agreement may be executed in counterparts, each of which will be deemed an original but all of which together will constitute one agreement.

22. JURISDICTION AND LAW

22.01 This Agreement, and all actions arising from it, must be governed by, subject to, and construed according to the laws of the State of Michigan. Each party consents to the personal jurisdiction of any competent court in Wayne County, Michigan, for any action arising out of this Agreement. Each party will not commence any action against the other because of any matter arising out of this Agreement, in any courts other than those in the County of Wayne, State of Michigan unless original jurisdiction is in the United States District Court for the Eastern District of Michigan, Southern Division, the Court of Claims, the Michigan Supreme Court or the Michigan Court of Appeals.

23. MISCELLANEOUS

23.01 It is mutually understood and agreed that neither of the parties hereto shall be held responsible for damages occasioned by delay or failure to perform where due to fire, strike, flood, acts of God, unavailability of labor, material, legal acts of public authorities, or delays caused by public carriers or third person (including contractors or subcontractors) which cannot reasonably be foreseen or provided against.

23.02 The parties agree that upon termination of this Agreement, the following sections shall survive termination and shall remain in full force and effect: 5.02; 11; 12; 13; 14 and 22.

23.03 The term "County" includes the Charter County of Wayne and all other associated, affiliated, or subsidiary departments or divisions now existing or to be created, their agents, and employees.

23.04 This Agreement must not be construed as a waiver of any governmental immunity by the County or City, or any of their agencies, or employees, has as provided by statute or modified by court decisions.

23.05 The headings of the articles in this Agreement are for convenience only and must not be used to construe or interpret the scope or intent of this Agreement or in any way affect this Agreement.

24. AUTHORIZATION AND CAPABILITY

24.01 This Agreement has been approved, as evidenced by the attached Resolutions adopted by the Livonia City Council and the County Commission. Copies of such resolutions shall be attached to this Agreement.

24.02 Each party warrants that the person signing this Agreement is authorized to sign on behalf of its principal and is empowered to bind its principal to this Agreement.

25. SIGNATURE

25.01 The County and City, by their authorized officers and representatives have executed this Agreement as of the dates written below.

[SIGNATURES ON THE FOLLOWING PAGES]

City of Livonia
Shelden Park

County Commission approved and execution authorized by Resolution No. _____ Date: _____	CHARTER COUNTY OF WAYNE By: _____ **Warren C. Evans** Its: County Executive Date: _____

APPROVED AS TO FORM

By: Patricia Moore

DEPT. OF CORPORATION COUNSEL

4/16/2025

City of Livonia
Shelden Park

Livonia City Council approved and execution authorized by Resolution No. _____ Date: _____	CITY OF LIVONIA By: _____ **Maureen Miller Brosnan** Its: Mayor Date: _____

EXHIBIT A: LEGAL DESCRIPTIONS

WARRANTY DEED

F619045 LI 17783 PA 345

KNOW ALL MEN BY THESE PRESENTS: That SHELDEN HOMES, INC., a Michigan Corporation, 1512 Buhl Building, Detroit, Michigan

CONVEYS AND WARRANTS TO: CITY OF LIVONIA, a Michigan Municipal Corporation

whose street number and post office address is 33001 Five Mile Road, Livonia, Michigan

the following described premises situated in the City of Livonia, County of Wayne, and State of Michigan, to-wit:

Parcel One 34F1a1a a2a2a

That part of the N. W. 1/4 of Section 34 described as beginning at a point distant S 0° 54' 16" W along the west section line 786.02 feet and S. 88° 39' 44" East, 183.93 feet from the N. W. corner of Section 34 and proceeding thence S. 88° 39' 44" East, 112 feet; thence S. 1° 18' 46" W. 544.02 feet; thence N. 88° 39' 44" W., 232.08 feet; thence N. 0° 54' 16" E., 434.02 feet; thence S. 88° 39' 44" E., 123.15 feet; thence N. 1° 18' 46" E., 110.0 feet to the point of beginning.

LEGAL DESCRIPTION APPROVED
S. M. Sonnet
OK Paul

Parcel Two 34F1a1a a2a2b

That part of the Northwest 1/4 of Section 34, Town 1 South, Range 9 East, described as beginning at a point distant South 0 degrees 54 minutes 16 seconds West, along the West section line, 786.02 feet and South 88 degrees 39 minutes 44 seconds East, ~~355.93 feet~~ from the Northwest corner of Section 34 and proceeding thence South 88 degrees 39 minutes 44 seconds East, 224 feet; thence South 1 degree 18 minutes 46 seconds West 544.02 feet; thence North 88 degrees 39 minutes 44 seconds West, 224 feet; thence North 1 degree 18 minutes 46 seconds East, 544.02 feet to the point of beginning.

LEGAL DESCRIPTION APPROVED
S. M. Sonnet
OK Paul

Parcel Three 34F1a1a a2a2c

That part of the Northwest 1/4 of Section 34, Town 1 South, Range 9 East, described as beginning at a point distant South 0 degrees 54 minutes 16 seconds West along the West section line 786.02 feet and South 88 degrees 39 minutes 44 seconds East, 639.93 feet from the Northwest corner of Section 34 and proceeding thence South 88 degrees 39 minutes 44 seconds East, 224 feet; thence South 1 degree 18 minutes 46 seconds West, 544.25 feet; thence North 88 degrees 39 minutes 44 seconds West, 224 feet; thence North 1 degree 18 minutes 46 seconds East, 544.02 feet to the point of beginning.

LEGAL DESCRIPTION APPROVED
S. M. Sonnet
OK Paul

Recorded AUG 3 1971 at 11 o'clock AM
BERNARD J. YOUNGBLOOD, Register of Deeds
WAYNE COUNTY, MICHIGAN 48226

758632

REAL ESTATE TRANSFER TAX
STATE OF MICHIGAN
Dept of Treasury
TAXATION
AUG 3 1971
28-10561
$ 2 0 0

This is to certify that there are no tax liens or titles on this property and that taxes are paid for FIVE YEARS previous to date of this instrument EXCEPT
No. 8084-9085
AUG 3 1971
WAYNE COUNTY TREASURER
Clerk

AUG 11 '71 AM

CITY OF LIVONIA
OFFICE OF THE CITY CLERK

Rec. 67.90

F619045

AU 37-9095 00005.00 II
AU 37-9094 00009.00 II

charge $12.50

Parcel Four

Lots No. 1647 to 1662 inclusive, the North 40 feet of Lot 1704, Lots No. 1705 to 1719 inclusive, Lots 1734 to 1748 inclusive, the North 40 feet of Lot 1749 the North 40 feet of Lot 1791, Lots 1792 to 1806 inclusive, Rosedale Gardens No. 9 part of the Northwest 1/4 of Section 34, Town 1 South, Range 9 East, City of Livonia, Wayne County, Michigan, as recorded in Liber 73, Page 41 of Plats, Wayne County, Records.

LEGAL DESCRIPTION APPROVED

together with all and singular the tenements, hereditaments and appurtenances thereunto belonging or in anywise appertaining,

for the full consideration of Five Hundred Eighty Nine Thousand and no/100 Dollars ($589,000.00)

subject to Easements and Restrictions of Record

Dated this 9th day of July A. D. 1971

Signed, Sealed and Delivered in Presence of:

Robert Wm. Emke, Jr.
(Robert Wm. Emke, Jr)

Thelma E. Pickley
(Thelma E. Pickley)

Signed and Sealed:

SHELDEN HOMES INC., a Michigan Corporation

W. Warren Shelden
W. Warren Shelden, President

STATE OF MICHIGAN)
COUNTY OF Wayne) ss.

On this 9th day of July A. D. 1971, before me personally appeared W. Warren Shelden to me personally known, who being by me sworn, did _____ say that he is _____ the President _____ of SHELDEN HOMES INC., a Michigan Corporation, the corporation named in and which executed the within instrument, and that

758632

the seal affixed to said instrument is the corporate seal of said corporation, and that said instrument was signed and sealed in behalf of said corporation by authority of its board of directors; and said W. Warren Shelden _____ acknowledged said instrument to be the free act and deed of said corporation.

Thelma E. Pickley

My commission expires: Dec 11, 1971

Notary Public Wayne County, Mich.

NOTARY PUBLIC THELMA E. PICKLEY

Instrument drafted by:
Harry C. Tatigian, City Attorney
Dept. of Law, City Hall
33001 Five Mile Road
Livonia, Michigan 48154

When recorded return to:
Office of the City Clerk
City Hall
33001 Five Mile Road
Livonia, Michigan 48154

Approved as to form:

Harry C. Tatigian
7-8-71

758632

F 12335

Corporation
QUIT CLAIM DEED

Lawyers Title Insurance Corporation L 15729 PA 317 Form 21

This Indenture, made this 22nd day of July 19 65

BETWEEN SHELDEN LAND COMPANY

a corporation organized and existing under and by virtue of the laws of the State of Michigan, with its principal office at 32121 Plymouth Road, Livonia, Michigan party (ies) of the first part,

and CITY OF LIVONIA, A michigan Municipal Corporation party (ies) of the second part,

whose Street Number and Postoffice Address is 33001 Five Mile Road, Livonia, Michigan

WITNESSETH, That the said party (ies) of the first part, for and in consideration of the sum of One Dollar and other valuable considerations----------XDOLLARS, to it in hand paid by the said party (ies) of the second part, the receipt whereof is hereby confessed and acknowledged, do (es) by these presents grant, bargain, sell, remise, release and forever QUIT CLAIM unto the said party (ies) of the second part, and his (her-their) heirs, successors and assigns, FOREVER, all that (those) certain piece (s) or parcel (s) of land situate and being in the city of Livonia County of Wayne and State of Michigan, and described as follows: to-wit:

Woodring Avenue, 60' wide:

The vacated portion of Woodring Avenue (60' wide), as platted in Rosedale Gardens No. 9, west of and abutting the North 25' of Lot 1792 and Lots 1793 to 1806, inclusive, in said Rosedale Gardens No. 9, part of the Northwest ¼ of Section 34, T. 1 S., R. 9 E., City of Livonia, Wayne County, Michigan, as recorded in Liber 73 of Plats, Page 41, Wayne County Records.

Roseland Avenue, 60' wide:

The vacated portion of Roseland Avenue (60' wide), as platted in Rosedale Gardens No. 9, west of and abutting the North 25' of Lots 1705 and Lots 1706 to 1719, inclusive, and east of and abutting Lots 1734 to 1747, inclusive, and the North 25' of Lot 1748 in said Rosedale Gardens No. 9, part of the Northwest ¼ of Section 34, T. 1 S., R. 9 E., City of Livonia, Wayne County, Michigan, as recorded in Liber 73 of Plats, Page 41, Wayne County Records.

THE ABOVE DESCRIBED LAND TO BE USED FOR PUBLIC PURPOSES.

TOGETHER WITH all and singular the hereditaments and appurtenances thereunto belonging or in anywise appertaining; TO HAVE AND TO HOLD the said premises to the said party (ies) of the second part, and to his (her-their) heirs and assigns, to the sole and only proper use, benefit and behoof of the said party (ies) of the second part, his (her-their) heirs and assigns, Forever.

IN WITNESS WHEREOF, The said party (ies) of the first part has (have) caused this instrument to be executed by its duly authorized officers and sealed with its corporate seal, the day and year first above written.

Signed, sealed and delivered in presence of

John A. McKean
John A. McKean

James D. Murphy

Shelden Land Company
By
W. Warren Shelden
W. Warren Shelden - President (L. S.)

F. E. Klockow
F. E. Klockow - Secretary (L. S.)

RECORDED AUG 11 1965 AT 1055 O'CLOCK A.M.
BERNARD J. YOUNGBLOOD, Register of Deeds
WAYNE COUNTY 26, MICHIGAN

Corporate Seal

STATE OF MICHIGAN
COUNTY OF Wayne } ss.

On this 22nd day of July 19 65 before me appeared W. Warren Shelden and F. E. Klockow to me personally known, who, being by me severally and duly sworn did say that they were respectfully President and Secretary of Shelden Land Company and that the seal affixed to said instrument is the corporate seal of said corporation, and that the said instrument was signed and sealed in behalf of said corporation by authority of its Board of Directors; and the said and acknowledged the said instrument to be the free act and deed of said corporation.

Mike Corrie
Mike Corrie

My Commission expires 9-26 1965 Notary Public WAYNE County, Michigan

Prepared by:
F. E. Klockow
32121 Plymouth Road
Livonia, Michigan

When recorded, return to:
Addison W. Bacon
City Clerk
33001 Five Mile Road
Livonia, Michigan

APPROVED AS TO FORM
DEPARTMENT OF LAW
BY
DATE 7-27-65

LEGAL DESCRIPTION APPROVED
DATE 7/22/65

591099

NO REVENUE ATTACHED

F 12335

(28

F 12306

L 15729 PA 286

CORPORATION
QUIT CLAIM DEED

THIS INDENTURE, made this 9th day of July, 1965, between SHELDEN HOMES, INC., a corporation organized and existing under and by virtue of the laws of the State of Michigan, with its principal office at 32121 Plymouth Road, Livonia, Michigan, party of the first part, and CITY OF LIVONIA, a Michigan Municipal Corporation, party of the second part, whose Street Number and Postoffice Address is 33001 Five Mile Road, Livonia, Michigan

WITNESSETH, That the said party of the first part, for and in consideration of the sum of One Dollar and other valuable considerations---------- to it in hand paid by the said party of the second part, the receipt whereof is hereby confessed and acknowledged, does by these presents grant, bargain, sell, remise, release and forever QUIT CLAIM unto the said party of the second part, and its heirs, successors and assigns, FOREVER, all those certain pieces or parcels of land situate and being in the City of Livonia, County of Wayne, and State of Michigan, and described as follows: to-wit:

VAN COURT (60' WIDE)
Part of the Northwest 1/4 of Section 34, T. 1 S., R. 9 E., City of Livonia, Wayne County, Michigan, being described as: Beginning at a point on the east line of Farmington Road (120' wide), said point being N. 0° - 54' - 16" E., 544.04' from the intersection of the said east line of Farmington Road and the North line of Rosedale Gardens No. 11(Liber 74 Page 67): Thence S. 88° - 39' - 44" E., 803.96'; Thence along the west line of Rosedale Gardens No. 9 (Liber 73 - Page 41), N. 1° - 18' - 46" E., 60.0'; Thence N. 88° - 39' - 44" W., 804.38'; Thence along the said east line of Farmington Road, S. 0° - 54' - 16" W., 60.0' to the point of beginning.

F 12306

WESTMORE AVENUE (60' WIDE)
Part of the Northwest 1/4 of Section 34, T. 1 S., R. 9 E., City of Livonia, Wayne County, Michigan, being described as: Beginning at the intersection of the north line of Rosedale Gardens No. 11 (Liber 74 - Page 67) and the west line of Westmore Avenue (60' wide) as platted in said Rosedale Gardens No. 11; Thence along the said north line of Rosedale Gardens No. 11, S. 88° - 39' - 44" E., 60.0'; Thence along the northerly extension of the east line of said Westmore Avenue, N. 1° - 18' - 46" E., 544.02'; Thence along the south line of Van Court (60' wide), N. 88° - 39' - 44" W., 60.0'; Thence S. 1° - 18' - 46" W., 544.02' to the point of beginning.

SHADYSIDE AVENUE (60' WIDE)
Part of the Northwest 1/4 of Section 34, T. 1 S., R. 9 E., City of Livonia, Wayne County, Michigan, being described as: Beginning at the intersection of the north line of Rosedale Gardens No. 11 (Liber 74 - Page 67) and the west line of Shady Side Avenue (60' wide) as platted in said Rosedale Gardens No. 11; Thence S. 88° - 39' - 44" E., along the said north line of Rosedale Gardens No. 11, 60.0'; Thence along the northerly extension of the east line of said Shady Side Avenue, N. 1° - 18' - 46" E., 544.02'; Thence along the south line of Van Court (60' wide), N. 88° - 39' - 44" W., 60.0'; Thence S. 1° - 18' - 46" W., 544.02' to the point of beginning.

THE ABOVE DESCRIBED LAND TO BE USED FOR PUBLIC PURPOSES.

TOGETHER WITH ALL and singular the hereditaments and appurtenances thereunto belonging or in anywise appertaining; TO HAVE AND TO HOLD the said premises to the said party of the second part, and to its heirs, and assigns, to the sole and only proper use, benefit and behoof of the said party of the second part, its heirs and assigns, Forever.

RECORDED AUG 11 1965 AT 10 53 O CLOCK A M
BERNARD J. YOUNGBLOOD, Register of Deeds
WAYNE COUNTY 26. MICHIGAN

591099

NO REVENUE ATTACHED

CORPORATION
QUIT CLAIM DEED

IN WITNESS WHEREOF, The said party of the first part has caused this instrument to be executed by its duly authorized officers and sealed with its corporate seal, the day and year first above written.

SHELDEN HOMES, INC.

By W. Warren Shelden
W. Warren Shelden, President

By F. E. Klockow
F. E. Klockow, Secretary

Signed, sealed and delivered in presence of

Mary Breza
Mary Breza

James D. Murphy
James D. Murphy

STATE OF MICHIGAN)
COUNTY OF WAYNE) ss

On this 9th day of July, 1965, before me appeared W. Warren Shelden and F. E. Klockow to me personally known, who being by me severally and duly sworn did say that they were respectfully President and Secretary of SHELDEN HOMES, INC. and that the seal affixed to said instrument is the corporate seal of said corporation, and that the said instrument was signed and sealed in behalf of said corporation by authority of its Board of Directors; and the said W. Warren Shelden and F. E. Klockow acknowledged the said instrument to be the free act and deed of said corporation.

Mary Breza
Mary Breza

My commission expires January 1, 1967

Notary Public Wayne County, Michigan

Prepared by:
F. E. Klockow
32121 Plymouth Road
Livonia, Michigan

When recorded, return to:
Addison W. Bacon, City Clerk
33001 Five Mile Road
Livonia, Michigan

LEGAL DESCRIPTION APPROVED
DATE 7/22/65

591099

APPROVED AS TO FORM
DEPARTMENT OF LAW
BY Henry C. Fogan
DATE 7-22-65

DEPARTMENT OF PARKS & RECREATION

PARKS AND RECREATION COMMISSION

MARK JOHNSON
CHAIRPERSON

KATHERINE JOLLY
CATHY KEVRA
ERIC LADWIG
KEVIN SUMMERS

15100 HUBBARD
LIVONIA, MICHIGAN 48154-3586
(734) 466-2410 RECREATION DIVISION
FAX: (734) 466-2679

MAUREEN MILLER BROSNAN
MAYOR

EDWARD DAVIS
SUPERINTENDENT

April 9, 2025

Mr. David Cartwright
Assistant Director, Wayne County Parks Division
33175 Ann Arbor Trail
Westland, Michigan 48185

Re: Millage Funding Request for 2024-25 Fiscal Year

Dear Mr. Cartwright,

The City of Livonia is proposing a redevelopment of Shelden Park for District 12. The City aims to improve Shelden Park by completely renovating the existing park. This would include removing all existing amenities that are well over 25 years old and renovating the entire site.

Project plans are included with this letter.

The goal of these projects is to create safe, dramatic, and fitting atmospheres while also increasing the facilities' practical use, accessibility, and safety.

If approved, work will be completed by Fall 2026.

The total budget plan for Shelden Park is $5,000,000, with $140,519 budgeted for 2024/25 Wayne County funds and the remainder from municipal funds.

Thank you once again for considering this project for Wayne County Parks Millage funding. Please let me know if you need any further information regarding this request.

Sincerely,

Edward Davis
Superintendent

Attachments

City of Livonia

Wayne County Parks Grant Application (District 12)

2024 Livonia Parks Improvement

Detailed description of the project:

The City of Livonia requests funding to redevelop Shelden Park.

These improvements would include the following:
Barrier-free playground, splash pad, comfort station, pavilions, walking path, tennis courts, pickleball courts, ball fields, soccer fields, and fitness station

Estimate of total cost:

The total cost is estimated to be $5,000,000.00

Detail the County resources requested:

The City of Livonia is requesting the County reimburse for the project cost not exceeding $140,4519.00.

The project must be included in the requestor's capital improvement plan:

The proposed project is incorporated in the capital improvement plan.

Evidence that the requestor's portion of the financing is secured and available:

Upfront funding for the entire project will be provided by the City of Livonia from the Community Recreation Fund as approved by the Council.

Describe the impact the project will have on the Wayne County Parks System:

The City of Livonia proposes a redevelopment of Shelden Park. Shelden is considered a community park asset and as such should be designed with additional amenities. This project will create the premier park site in Livonia and provide a substantial upgrade to the current facilities onsite.

Analysis of the benefits to Wayne County residents:

Wayne County residents will have access to another safe, accessible environment to promote their health and wellness and gather with family and friends.

Describe the community that the project will impact:

Livonia may be characterized as a carefully and successfully planned community of residential, industrial, commercial, and civic development. The City has never had a central business district because of its former status as a township. However, despite unprecedented urban growth, we have successfully maintained its friendly hometown atmosphere.

Livonia Township was organized in 1835 with the same boundaries as today. Livonia was incorporated as a City on May 23, 1950.

The City, part of the Detroit urbanized area, forms a perfect 36 square mile area in the northwestern portion of Wayne County. Its boundaries are Inkster Road on the east, Eight Mile Road on the north, Eckles Road and Haggerty Road on the west, and Joy Road on the south.

Livonia enjoys unmatched accessibility. The City's strategic location offers easy east-west access via the Jeffries Expressway (I-96) and north-south transportation on the I-275 expressway. Major highways and interstates fan out in every direction, providing convenient drive times.

Concerning recreation planning, the City has long been recognized as progressive in its approach to acquiring, preserving, and promoting recreational areas and programs for both its existing and future residents. Over 1,389 acres of recreational open space exist within the City – well over the 10 acres per 1000 residents as recommended by parks and recreation experts.

Recreational opportunities in Livonia include one archery range; the Community Recreation Center; three 18-hole public golf courses; seven in-line skating courses; 10 sand volleyball courts; 28 tennis courts; 12 pickleball courts; six walking paths; two ice arenas with three sheets of ice (leased to a private operator); three outdoor swimming pools; 43 baseball diamonds; and 25 soccer fields. The parks also offer 17 picnic pavilions, play structures at 23 neighborhood parks for all ages, three fitness clusters, six miles of nature trails, and 11 designated nature preserve areas.

Legal Descriptions: See attached title search

MASTER PLAN KEY

1. CONNECTION TO ALFRED NOBLE LIBRARY
2. 10' BIKING & WALKING PATH
3. SMALL PAVILION
4. CROSSWALK
5. BIKE RACK
6. SPLASH PAD
7. COMBINED COMFORT STATION AND PAVILION
8. PICNIC PLAZA
9. BENCHES TYP.
10. PLAYGROUND
11. PLAY MOUNDS AND BRIDGE
12. FLEXIBLE LAWN SPACE
13. ADULT FITNESS AREA
14. SWING BENCH TYP.
15. NATIVE PLANTINGS WITH BERMS OR SWALES
16. EXISTING PARKING LOT
17. PICKLEBALL COURTS
18. TENNIS COURTS
19. 5' SIDEWALK
20. BRONCO BASEBALL FIELD
21. H.S. BASEBALL FIELD
22. BASEBALL DUGOUTS
23. EXISTING TURNAROUND
24. EXISTING TREES TYP.
25. PROPOSED TREES TYP.
26. WELCOME / RULES SIGN
27. FLEXIBLE LAWN / SPORTS FIELD AREA

120 FEET

SHELDEN PARK MASTER PLAN

10/04/24

City of Livonia, Michigan

DLZ

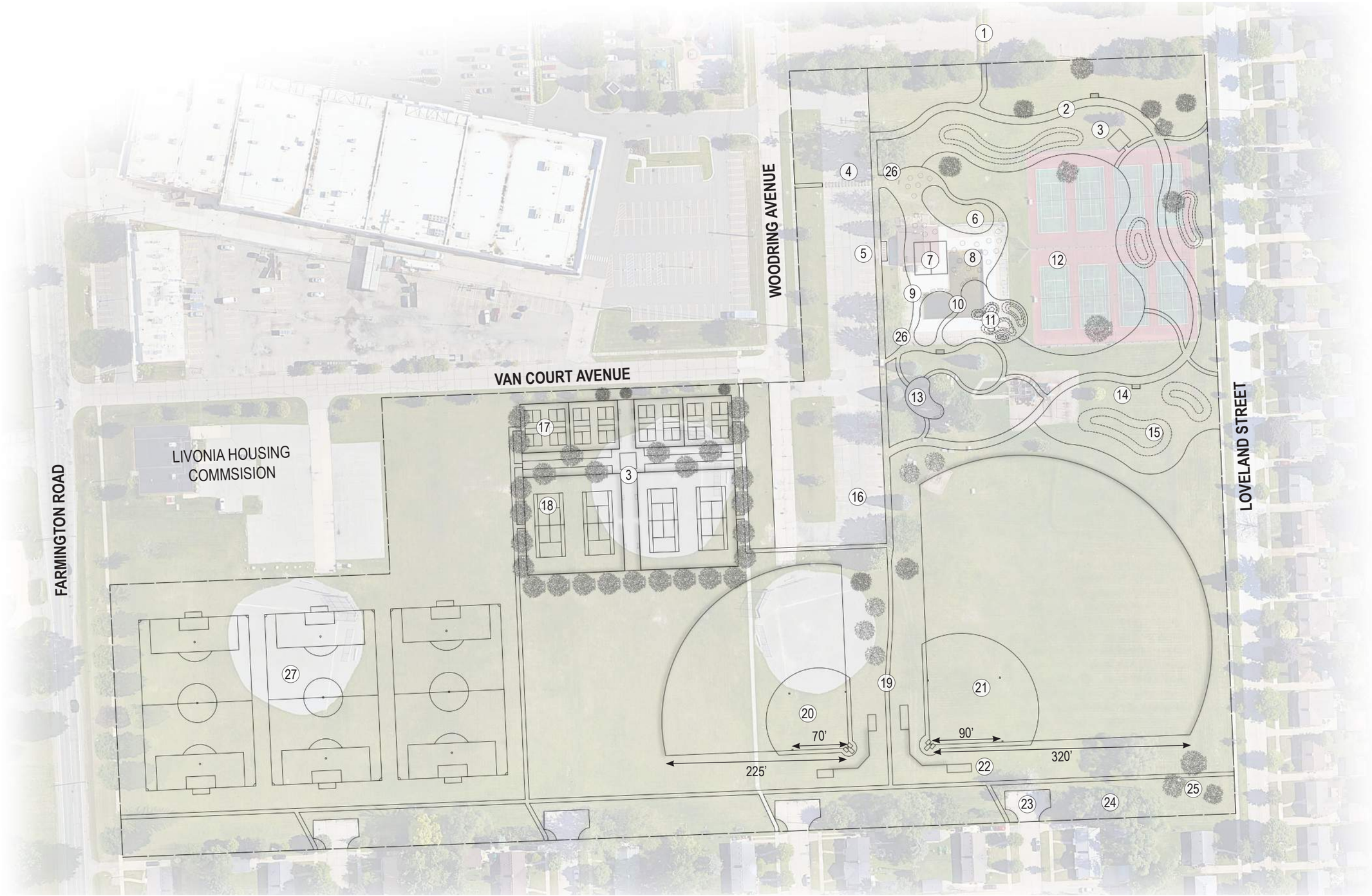

MASTER PLAN KEY

1. CONNECTION TO ALFRED NOBLE LIBRARY
2. 10' BIKING & WALKING PATH
3. SMALL PAVILION
4. CROSSWALK
5. BIKE RACK
6. SPLASH PAD
7. COMBINED COMFORT STATION AND PAVILION
8. PICNIC PLAZA
9. BENCHES TYP.
10. PLAYGROUND
11. PLAY MOUNDS AND BRIDGE
12. FLEXIBLE LAWN SPACE
13. ADULT FITNESS AREA
14. SWING BENCH TYP.
15. NATIVE PLANTINGS WITH BERMS OR SWALES
16. EXISTING PARKING LOT
17. PICKLEBALL COURTS
18. TENNIS COURTS
19. 5' SIDEWALK
20. BRONCO BASEBALL FIELD
21. H.S. BASEBALL FIELD
22. BASEBALL DUGOUTS
23. EXISTING TURNAROUND
24. EXISTING TREES TYP.
25. PROPOSED TREES TYP.
26. WELCOME / RULES SIGN
27. FLEXIBLE LAWN / SPORTS FIELD AREA

120 FEET

SHELDEN PARK MASTER PLAN - AERIAL CONTEXT

10/04/24

City of Livonia, Michigan

DLZ

EXHIBIT C: SIGNAGE SPECIFICATIONS

Attached, please find the sketch and samples of the sign layout that we are suggesting for all IGA Grant projects. The specifications are as follows:

All parks millage signs must include language that states, **made possible through the Wayne County Parks millage in cooperation with (*place your municipality name here)***

- Sign size 48’ x 30’ ¾’ marine grade plywood
- Sign is to be one sided, two sides is optional
- To be cut with” carriage “style top i.e. arched (optional)
- Color options are determined by the municipality
- Font should be traditional styles in Helveticas, Arial, Times New Roman
- Include County Logo, County Executive and County Commissioners names.
- We suggest using 3M Reflective Adhesive waterproof vinyl. Painting is optional
- Vertical post shall be 4’x 6’ weather proof timbers routed on 4’ side to accommodate the sign, staining of posts optional
- Bury post a minimum of 42’ into ground and backfill with dirt and compost, concrete footing is optional
- Bottom of sign shall be 2ft. minimum above grade
- Sign will be secured to post with flat head Galvanized wood screws (approx. #10) 2 per post (min.)
- Proof to be provided of final design prior to fabrication and installation

We are flexible on fabrication and colors as long as it resembles the example attached.
Any request to deviate from the signage should be directed to the Parks Director.

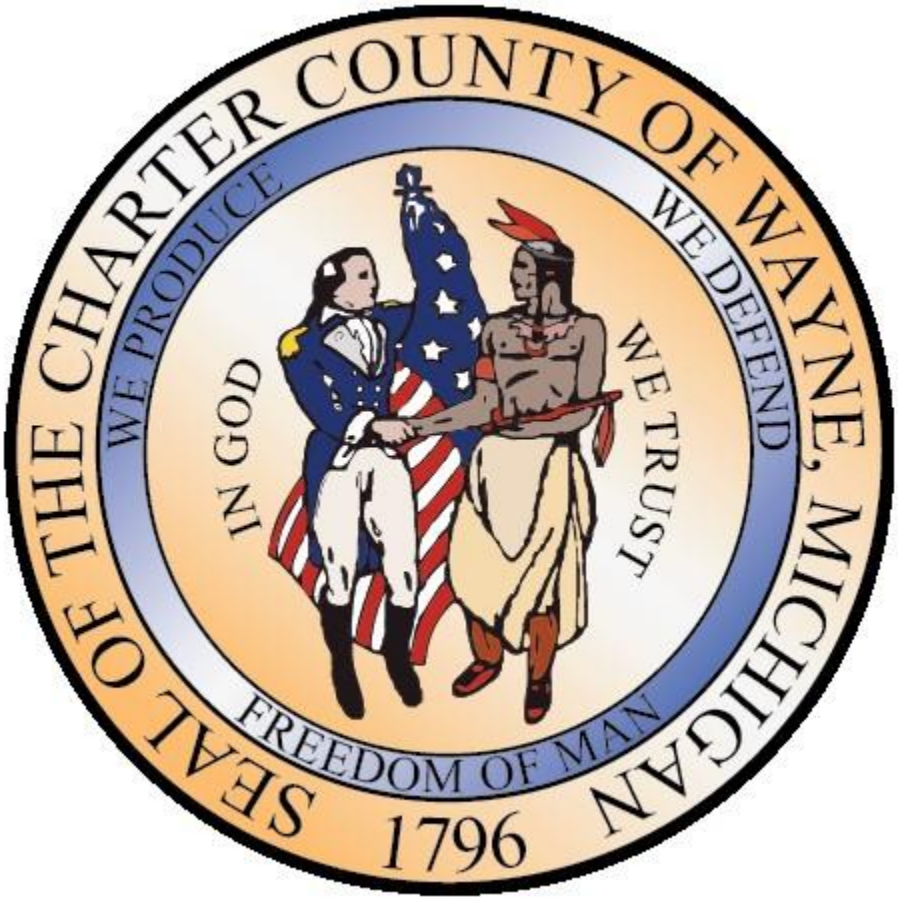
SEAL OF THE CHARTER COUNTY OF WAYNE, MICHIGAN
WE PRODUCE
WE DEFEND
IN GOD
WE TRUST
FREEDOM OF MAN
1796

Exhibit D: INSURANCE COVERAGES

City, at its expense, or any contractors, subcontractors, consultants or agents retained by City (each a "Contractor"), at their own expense, shall procure and maintain for the duration of this Agreement, insurance against claims for injuries to persons or damages to property which may arise from or in connection with the performance of the services by the Contractor, its agents, representatives or employees. Contractor shall maintain at least the following minimum coverage:

Commercial General Liability (CGL)

Insurance Services Office Form CG 00 01 covering CGL on an "occurrence" basis, including products and completed operations, property damage, bodily injury and personal and advertising injury with limits no less than $1,000,000 per occurrence. If a general aggregate limit applies, either the general aggregate limit shall apply separately to this Contract or the general aggregate limit shall be twice the required occurrence limit.

Umbrella or Excess Liability

Policy in an amount not less than $1,000,000. Umbrella or excess policy wording shall be at least as broad as the primary or underlying policy(ies) and shall apply both to the Contractor's general liability and to its automobile liability insurance and shall be written on an occurrence basis. The County, officials, employees and others as may be specified in any "Special Conditions" shall be named as an additional insured under this policy.

Automobile Liability

Insurance Services Office Form Number CA 0001 covering, Code 1 (any auto), or if Contractor has no owned autos, Code 8 (hired) and 9 (non-owned), with limits no less than $1,000,000 per accident for bodily injury and property damage.

Workers' Compensation

Insurance as required by the State of Michigan, with Statutory limits, and employer's liability insurance with limits of no less than $1,000,000 per accident for bodily injury or disease.

Professional Liability (if Design/Build)

Insurance appropriate to the Contractor's profession, with limits no less than $3,000,000 per occurrence or claim, $3,000,000 aggregate.

Builder's Risk (Course of Construction)

Insurance utilizing "All Risk" (Special Perils) coverage form, with limits equal to the completed value of the project and no coinsurance penalty provisions.

Contractors' Pollution Legal Liability and/or Asbestos Legal Liability and/or Errors and Omissions (if project involves environmental hazards)

Insurance with limits no less than $1,000,000 per occurrence or claim, and $2,000,000 policy aggregate.

If the Contractor maintains higher limits than the minimum insurance coverage required as stated above in this Exhibit, the Contractor shall maintain the coverage for the higher insurance

limits for the duration of this Agreement.

Additional Insured Status

The County, its officers, officials, employees, volunteers, and others as may be specified in any "Special Conditions" shall be additional insureds on the CGL policy with respect to liability arising out of work or operations performed by or on behalf of the Contractor including materials, parts, or equipment furnished in connection with such work or operations. General liability coverage can be provided in the form of an endorsement to the Contractor's insurance (at least as broad as ISO Form CG 20 10 11 85 or both CG 20 10 and CG 20 37 forms if later revisions used).

Primary Coverage

For any claims related to this Agreement, the Contractor's insurance coverage shall be primary insurance as respects the County, its officers, officials, employees, and volunteers. Any insurance or self-insurance maintained by the County, its officers, officials, employees, or volunteers shall be excess of the Contractor's insurance and shall not contribute with it.

Notice of Cancellation

Each insurance policy shall state that **c**overage shall not be canceled, except with notice to the County.

Waiver of Subrogation

Contractor grants to the County a waiver of any right to subrogation which any insurer of the Contractor may acquire against the County by virtue of the payment of any loss under such insurance. Contractor agrees to obtain any endorsement that may be necessary to affect this waiver of subrogation, but this provision applies regardless of whether or not the County has received a waiver of subrogation endorsement from the insurer.

Deductibles and Self-Insured Retentions

Any deductibles or self-insured retentions must be declared to and approved by the County. The County may require the Contractor to provide proof of ability to pay losses and related investigations, claim administration, and defense expenses within the retention.

All insurance must be effected under valid and enforceable policies, issued by recognized, responsible insurers qualified to conduct business in Michigan which are well-rated by national rating organizations. All companies providing the coverage required shall be licensed or approved by the Insurance Bureau of the State of Michigan and shall have a policyholder's service rating no lower than A:VII as listed in A.M. Best's Key Rating guide, current edition or interim report.

Claims-made Policies

If any of the required policies provide coverage on a claims-made basis:

1. The retroactive date must be shown and must be before the date of this Agreement or the date the Contractor starts to perform the services.
2. Insurance must be maintained and evidence of insurance must be provided for at least five (5) years after completion of this Agreement.
3. If coverage is canceled or non-renewed, and not replaced with another claims-made policy form with a retroactive date prior to this Agreement's effective date, the

Contractor must purchase "extended reporting" coverage for a minimum of five (5) years after completion of Agreement work.

Verification of Coverage

Contractor shall furnish the County with original certificates and amendatory endorsements or copies of the applicable policy language effecting coverage required by this Exhibit. The County shall receive and approve all certificates and endorsements before the Contractor begins providing services. Failure to obtain the required documents prior to commencement of services shall not waive the Contractor's obligation to provide them. The County reserves the right to require complete, certified copies of all required insurance policies, including endorsements required by this Exhibit, at any time.

Subcontractors

Contractor shall require and verify that all subcontractors maintain insurance satisfying all the stated requirements, and Contractor shall ensure that the County is an additional insured on insurance required from subcontractors.

Special Risks or Circumstances

The County reserves the right to modify these requirements, including limits, based on the nature of the risk, prior experience, insurer, coverage, or other special circumstances.

➢ The Contractor must submit certificates evidencing the insurance to the County Risk Management Division at the time the Contractor executes an agreement with the City, and at least fifteen (15) days prior to the expiration dates of expiring policies.

Surety Bonds

The Contractor shall provide the following surety bonds: 1) bid bond; 2) performance bond; 3) payment bond; 4) maintenance bond. The payment bond and the performance bond shall be in a sum equal to the contract price. If the performance bond provides for a one year warranty a separate maintenance bond is not necessary. If the warranty period specified in the contract is for longer than one year a maintenance bond equal to 10% of the contract price is required. Bonds shall be duly executed by a responsible corporate surety, authorized to issue such bonds in the State of Michigan and secured through an authorized agent with an office in Michigan.

MASTER PLAN KEY

1. CONNECTION TO ALFRED NOBLE LIBRARY
2. 10' BIKING & WALKING PATH
3. SMALL PAVILION
4. CROSSWALK
5. BIKE RACK
6. SPLASH PAD
7. COMBINED COMFORT STATION AND PAVILION
8. PICNIC PLAZA
9. BENCHES TYP.
10. PLAYGROUND
11. PLAY MOUNDS AND BRIDGE
12. FLEXIBLE LAWN SPACE
13. ADULT FITNESS AREA
14. SWING BENCH TYP.
15. NATIVE PLANTINGS WITH BERMS OR SWALES
16. EXISTING PARKING LOT
17. PICKLEBALL COURTS
18. TENNIS COURTS
19. 5' SIDEWALK
20. BRONCO BASEBALL FIELD
21. H.S. BASEBALL FIELD
22. BASEBALL DUGOUTS
23. EXISTING TURNAROUND
24. EXISTING TREES TYP.
25. PROPOSED TREES TYP.
26. WELCOME / RULES SIGN
27. FLEXIBLE LAWN / SPORTS FIELD AREA

120 FEET

SHELDEN PARK MASTER PLAN

10/04/24

City of Livonia, Michigan

DLZ

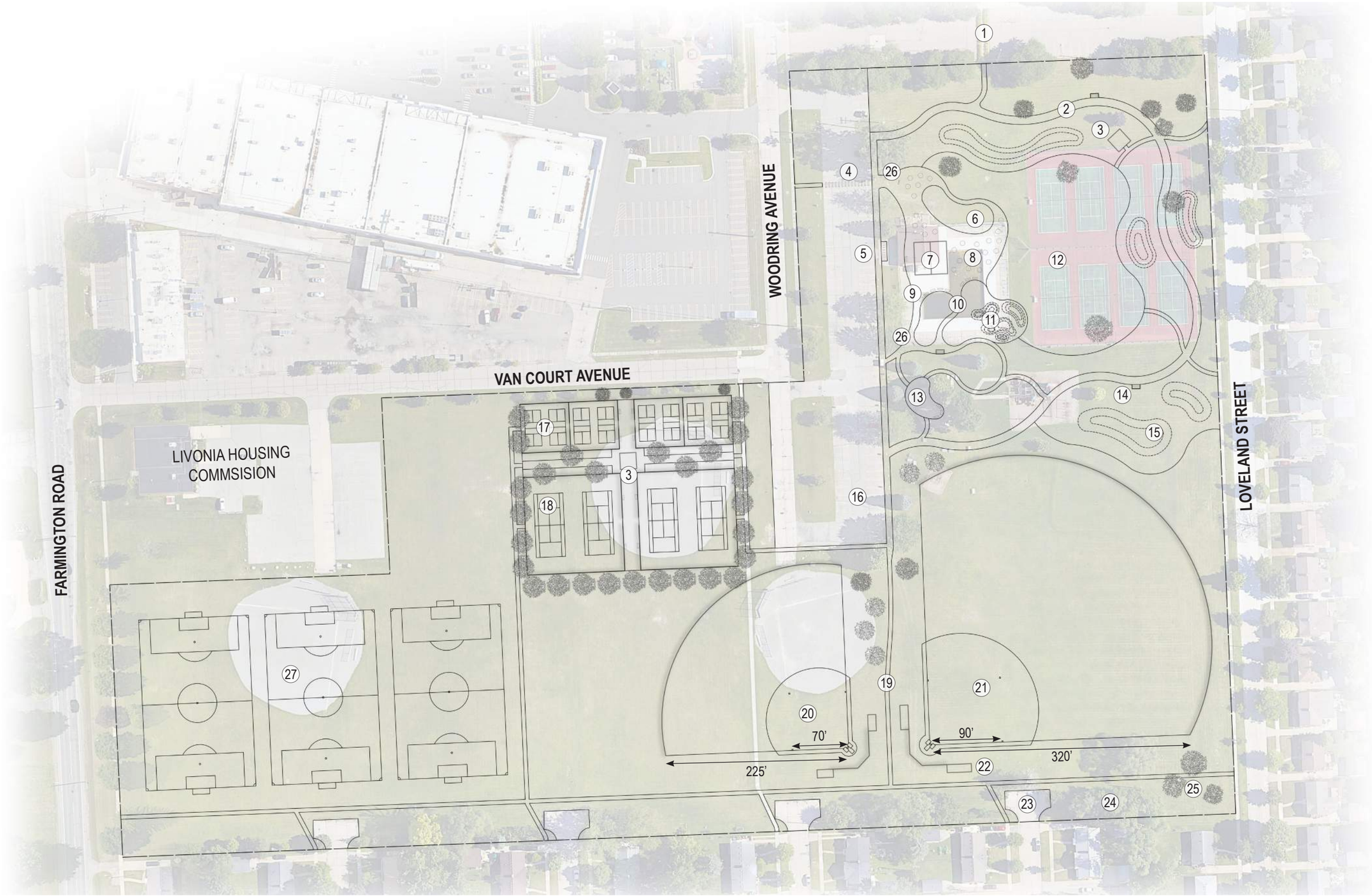

MASTER PLAN KEY

1. CONNECTION TO ALFRED NOBLE LIBRARY
2. 10' BIKING & WALKING PATH
3. SMALL PAVILION
4. CROSSWALK
5. BIKE RACK
6. SPLASH PAD
7. COMBINED COMFORT STATION AND PAVILION
8. PICNIC PLAZA
9. BENCHES TYP.
10. PLAYGROUND
11. PLAY MOUNDS AND BRIDGE
12. FLEXIBLE LAWN SPACE
13. ADULT FITNESS AREA
14. SWING BENCH TYP.
15. NATIVE PLANTINGS WITH BERMS OR SWALES
16. EXISTING PARKING LOT
17. PICKLEBALL COURTS
18. TENNIS COURTS
19. 5' SIDEWALK
20. BRONCO BASEBALL FIELD
21. H.S. BASEBALL FIELD
22. BASEBALL DUGOUTS
23. EXISTING TURNAROUND
24. EXISTING TREES TYP.
25. PROPOSED TREES TYP.
26. WELCOME / RULES SIGN
27. FLEXIBLE LAWN / SPORTS FIELD AREA

120 FEET

SHELDEN PARK MASTER PLAN - AERIAL CONTEXT

10/04/24

City of Livonia, Michigan

DLZ

LETTER TO THE LIVONIA CITY COUNCIL

14.

Parks and Recreation
May 5, 2025

MEETING DATE	PRESENTED BY
S051925/R060225	Ted Davis, CPRP, Superintendent of Parks and Recreation

AGENDA ITEM

REQUEST TO APPROVE AN INTERGOVERNMENTAL AGREEMENT BETWEEN THE CHARTER COUNTY OF WAYNE AND THE CITY OF LIVONIA: Department of Parks and Recreation, re: for a grant of $106,401 toward the replacement of the fitness cluster at Rotary Park.

BACKGROUND DETAILS

The Department of Parks and Recreation respectfully requests your approval to enter into an Intergovernmental Agreement with Wayne County for a grant of $106,401 to be used toward the replacement of the fitness cluster at Rotary Park.

These agreements are for 2024/25. We hope to complete the project in calendar year 2026. Projects will be completed with City funds and then reimbursed by the County. The total cost of the project is projected to be $150,000.

PREFERRED COUNCIL RECOMMENDATION/RESOLUTION (Please complete this field. Attachments are not to be used in lieu of the recommendation)

Recommend Council to authorize the Mayor and City Clerk to execute these contracts, which have been approved as to form by the City Attorney, on behalf of the City of Livonia.

ATTACHMENTS

1. S051925 LTC fitness cluster at Rotary Park
2. 2025 DPS Park Millage IGA-City of Livonia (Rotary Park)-FY2024-2025

APPROVED BY

Ted Davis, CPRP, Superintendent of Parks and Recreation

Date: May 05, 2025

Date: May 09, 2025

Debra Peck Lichtenberg, CPA, Finance Director

Date: May 09, 2025

Carter Fisher, City Attorney

Date: May 09, 2025

Maureen Miller Brosnan, Mayor

AGREEMENT

between

THE CHARTER COUNTY OF WAYNE

and

THE CITY OF LIVONIA

for

Improvements to

ROTARY PARK

FY 2024-2025

TABLE OF CONTENTS

1. PURPOSE 1
2. SCOPE OF THE PROJECT 1
3. TERM OF CONTRACT 1
4. COUNTY'S COVENANTS 1
5. CITY'S COVENANTS 1
6. TERMINATION 2
7. DATA TO BE FURNISHED 3
8. ADMINISTRATION 3
9. RELATIONSHIP OF PARTIES 4
10. INSURANCE 4
11. HOLD HARMLESS 4
12. LIABILITY 4
13. ENVIRONMENTAL MATTERS 4
14. COMPLIANCE WITH LAWS 6
15. AMENDMENTS 6
16. NONDISCRIMINATION PRACTICES 6
17. ETHICS IN CONTRACTING 8
18. NOTICES 8
19. WAIVER OF ANY BREACH 8
20. SEVERABILITY OF PROVISIONS 9
21. MERGER CLAUSE 9
22. JURISDICTION AND LAW 9
23. MISCELLANEOUS 9
24. AUTHORIZATION AND CAPABILITY 10
25. SIGNATURE 10

EXHIBIT A: LEGAL DESCRIPTIONS A-1
EXHIBIT B: PROJECT DESCRIPTIONS B-1
EXHIBIT C: SIGNAGE SPECIFICATIONS C-1
EXHIBIT D: INSURANCE COVERAGES D-1

THIS AGREEMENT ("Agreement") is between the County of Wayne, Michigan, a public body corporate and Home Rule Charter County, acting through its Department of Public Services, Parks Division (hereinafter the "County") and the City of Livonia, a Michigan municipal corporation (hereinafter "City").

1. PURPOSE

1.01 The County and City have an interest in entering into cooperative parks and recreation projects that are mutually beneficial to the citizens of Wayne County.

2. SCOPE OF THE PROJECT

2.01 The County will cooperatively fund the construction of improvements (the "Project") at Rotary Park, located in the City (individually, "Site" or collectively, "Sites"), for the citizens of Wayne County, at the location(s) described in **Exhibit A** attached hereto and made a part hereof. The County will finance any improvements agreed upon by the Chief Executive Officer for the County or his/her designee and the Mayor of the City or his/her designee, in creation of the Project under the limitations indicated in Sections 3, 4 and 5.

3. TERM OF CONTRACT

3.01 The term of this Agreement shall commence upon approval by the Wayne County Commission and **shall terminate on September 30, 2027 at 11:59 p.m.**

3.02 If City fails to complete the Project by the termination date as stated in Section 3.01, the parties agree that the County shall be under no further obligation to provide any remaining funds committed hereunder.

4. COUNTY'S COVENANTS

4.01 The County will assist in funding construction of the Project described in **Exhibit B** attached hereto and made a part hereof. The FY 2024-2025 funding provided by the County for the recreational Project **shall not exceed One Hundred Six Thousand Four Hundred One Dollars ($106,401).**

5. CITY'S COVENANTS

5.01 Prior to construction of any portion of the Project, City shall provide the County with documents evidencing title to each Site, including, but not limited to, deeds, assignments, leases, land contracts, and mortgage instruments. The documents must specify all covenants, restrictions, easements, or other encumbrances on each Site.

5.02 City warrants that it is the legal owner with good, valid, and clear title to each Site and that each Site is accurately described in **Exhibit A**. City shall hold harmless and defend the County against any claims, demands, penalties, fines, liabilities, settlements, damages, costs or expenses, including but not limited to, court costs and litigation expenses, known or unknown, contingent or otherwise, arising out of or in any way related to an action by a third party to quiet title in any Site described in **Exhibit A**.

5.03 City shall keep accurate records and account of the Project costs that shall be accessible for inspection and audit by a representative of the County.

5.04 City shall submit to the County no more frequently than once every 30 days, a certified application for reimbursement of acceptable Project costs together with all contractor and

subcontractor certified invoices and any required supporting documentation for reimbursement, which shall be made upon receipt and approval of the application for reimbursement. The County is under no obligation to reimburse City for any unapproved costs or costs outside the scope of this Agreement.

5.05 City shall be responsible for financing the Project beyond the financial commitment the County has made as indicated in Section 4.01.

5.06 City shall operate and maintain improvements for public recreation, and that it shall allow each park to be open to the public on equal and reasonable terms and that no individual shall be denied ingress or egress thereto or the use thereof on the basis of sex, race, color, religion, national origin, residence, age or handicap.

5.07 City agrees that in consideration of the financial commitment that the County is providing for the Project, City shall operate each Site as a recreational facility for no less than ten (10) years after the Project is completed.

5.08 City will develop signage at its own expense, which recognizes the County as a donor at each Site. The signage shall comply with the specifications described in **Exhibit C** attached hereto and made a part hereof. The County shall have the right to approve the signage. Such approval will not be unreasonably withheld or delayed. City shall install the signage prior to the Project's completion.

5.09 City agrees to provide the County with an opportunity to participate in planning any press conference, ribbon cutting ceremony, opening ceremony, or other public/media announcement related to the Project ("media event"). City further agrees to provide the County with no less than thirty (30) days prior written notice of a proposed media event.

5.10 Breach of any of the provisions contained in this Article may be regarded as a material breach of this Agreement.

6. TERMINATION

6.01 This Agreement can be terminated by either party with or without cause upon thirty (30) days written notice, prior to commencing construction. If terminated prior to commencing construction of the Project, each party is solely responsible for its own costs, fees, and obligations incurred prior to the termination.

6.02 After the Project's construction is commenced, the County may terminate this Agreement with or without cause and shall be responsible for expenses previously approved by the County and incurred by City, not to exceed the amount stated in Section 4.01.

6.03 City may terminate this Agreement, with or without cause, after construction is commenced and shall return to the County any funding provided by the same under this Agreement.

6.04 This Agreement shall terminate if any Site is not operational and regularly open to the public.

7. DATA TO BE FURNISHED

7.01 City must maintain copies of all information, books, data, reports, records, etc., related to the Project. Such information and records shall be maintained for a period of three (3) years from the date City receives its final reimbursement payment under this Agreement.

7.02 Upon the request of the County or its authorized representative, including its Legislative Auditor General, City must furnish, without charge, copies of all information, books, records, data, reports, etc., of City, or any contractors, subcontractors, consultants or agents rendering or furnishing services under this Agreement, whether direct or indirect, that will permit adequate evaluation or audit of the services provided by City or any of its contractors, subcontractors, consultants or agents. City must include a similar covenant allowing for County audit in any agreement it has with a contractor, subcontractor, consultant or agent related to this Agreement. The County may delay reimbursement payments to City pending the results of any such audit without penalty or interest.

7.03 The County may schedule conferences at mutually convenient times with City administrative personnel to gather the information. If, as a result of any audit conducted by or for the County relating to City's performance under this Agreement, a discrepancy should arise as to the amount of compensation due City, City shall pay to the County on demand the amount of compensation in question. If City fails or refuses to make payment, in addition to other legal remedies available to the County, the County may retain said amount from any funds allocated to City but not yet disbursed under this Agreement or may offset such a deficiency against the compensation to be paid City in any concurrent, successive or future agreements between the parties.

7.04 City further acknowledges the right of the Wayne County Commission as a third-party beneficiary of this Agreement to sue for specific performance to enforce the audit rights provided herein for the Legislative Auditor General.

8. ADMINISTRATION

8.01 City must inform the County as soon as the following types of conditions become known:

A. Probable delays or adverse conditions which do or may materially prevent meeting the objectives of this Agreement, including changes, transfer, or assignment of any real property interest related to any Site;

B. Favorable developments or events that enable meeting time schedules or goals sooner than anticipated; or

C. Any changes or modifications in appropriations and funding for the Project.

9. RELATIONSHIP OF PARTIES

9.01 The parties are independent entities. No liability or benefits, such as Workers' Compensation, pension rights, or insurance rights, arising out of, or related to a contract for hire or employer/employee relationship, accrues to either party or either party's agents, contractors, subcontractors, or employees as a result of this Agreement. No relationship, other than that of independent contractor will be implied between the parties, or either party's agents, employees, contractors, or subcontractors.

10. INSURANCE

10.1 City will require that all contractors undertaking work on the Project abide the terms, and provide insurance coverage in said amounts, as set forth in **Exhibit D**.

10.2 All insurance and bonds shall name the Charter County of Wayne and the City as insured or beneficiary.

11. HOLD HARMLESS

11.01 City agrees to remain responsible for its own negligence, or tortious acts, errors, or omissions, and the acts, errors, or omissions of any of its employees, contractors, subcontractors, consultants, or agents. It is agreed that the County is merely acting as a funding source for the Project and that any negligence, or tortious acts, errors, or omissions on the part of the County shall only arise out of providing these funds or processing reimbursement requests made by City as submitted pursuant to Section 5.04.

11.02 This hold harmless provision must not be construed as a waiver of any governmental immunity by the County or City or any of their agencies, or employees, as provided by statute or modified by court decisions.

12. LIABILITY

12.01 The County does not assume and is not responsible for, payment of any debt service, lien, or encumbrance, including, but not limited to, mortgage, promissory note, land contract, or other obligation, incurred prior to the signing or during the term of this Agreement.

12.02 This Agreement is not intended to create beneficial rights in any third party other than the Wayne County Commission. This Agreement is entered into for the sole benefit of the parties to this Agreement.

13. ENVIRONMENTAL MATTERS

13.01 City warrants to the County that City will not use Hazardous Materials (as defined in Section 13.06) at any Site in violation of any governmental regulation pertaining to the use, storage, treatment, transportation, manufacture, refinement, handling, production or disposal of Hazardous Materials.

13.02 City warrants that it is not in violation of governmental regulations pertaining to the use, storage, treatment, transportation, manufacture, refinement, handling, production or disposal of Hazardous Materials at any Site, and, to the best of City's knowledge, there have been no actions commenced or threatened by any party for noncompliance which affects a Site.

13.03 City will keep each Site free of Hazardous Materials except to the extent that the Hazardous Materials are stored or used in compliance with applicable local, state and federal

regulations. City must not cause or permit any Site to be used to generate, manufacture, refine, transport, treat, store, handle, dispose of, transfer, produce, or process Hazardous Materials, except in compliance with governmental regulations. City shall not cause or permit, as a result of any intentional or unintentional act or omission on the part of City, any tenant, subtenant or occupant, the release, spill, leak or emission of Hazardous Materials at any Site or onto any other contiguous property.

13.04 Prior to commencing the Project, City must conduct and complete or cause to be conducted and completed an investigation, including a comprehensive environmental audit, studies, sampling, and testing, as the County deems necessary. A copy of any environmental audit, study, sampling or testing shall be provided to the County within ten (10) working days of City's receipt of such audit, study, sampling or testing. If the audit reveals the existence of any Hazardous Material at any Site, City shall immediately disclose the findings to the County. If the County decides to proceed with the Project, City shall do or cause to be done all remedial, removal and other actions necessary to clean up and remove all Hazardous Materials on, under, from or affecting the Site as required by all applicable governmental regulations, to the satisfaction of the County, and according to all federal, state and local governmental authorities. Any audit conducted by the County is solely for the benefit, protection, and interest of the County. City or any third party cannot rely upon the audit conducted by the County for any purpose.

13.05 It is agreed that the County is merely acting as a funding source for the Project and that the County shall only be responsible for providing these funds and processing reimbursement requests made by City as submitted pursuant to Section 5.04. Therefore, the County shall not be responsible for any claims, demands, penalties, fines, liabilities, settlements, damages, costs or expenses, including attorney and consultant fees, investigation and laboratory fees, court costs and litigation expenses, known or unknown, contingent or otherwise, arising out of or in any way related to:

A. The presence, disposal, release or threatened release of any Hazardous Materials on, over, under, from or affecting the Site or the soil, water, vegetation, buildings, personal property, persons or animals;

B. Any personal injury (including wrongful death) or property damage (real or personal) arising out of or related to Hazardous Materials at a Site;

C. Any lawsuit brought or threatened, settlement reached or government order relating to the Hazardous Materials with respect to a Site;

D. Any violation of laws, orders, regulations, requirements or demands of government authorities, or any policies or requirements of any mortgage, which are based on or related to the Hazardous Materials used at a Site;

E. This section applies to the presence, disposal, release, leakage, or threatened release of any Hazardous Materials prior to the effective date of this Agreement.

13.06 Hazardous Material means any material or substance:

A. Which is or becomes defined as a hazardous substance, pollutant, or contaminant pursuant to the Comprehensive Environmental Response, Compensation and Liability Act (42 U.S.C. 9601 et. seq.) and any amendments thereto and regulations pursuant thereto;

B. Containing gasoline, oil, diesel, fuel, or other petroleum products;

C. Which is or becomes defined as hazardous waste pursuant to the Resource Conservation and Recovery Act (42 U.S.C. 6901 et. seq.) and any amendments thereto and regulations pursuant thereto;

D. Containing polychlorinated biphenyl;

E. Containing asbestos;

F. Which is radioactive;

G. The presence of which requires investigation or remediation under any governmental regulation; or

H. Which is or becomes defined as a hazardous waste, hazardous substance, pollutant, contaminant, or biologically hazardous material under any governmental regulation.

14. COMPLIANCE WITH LAWS

14.01 Each party must comply with and must require its employees to comply with all applicable laws and regulations.

14.02 City must construct and develop the Project or cause the Project to be constructed and developed according to applicable local, state and federal laws.

15. AMENDMENTS

15.01 No amendment to this Agreement is effective unless it references this Agreement, is written and signed by duly authorized representatives of both parties and approved by resolutions adopted by the Livonia City Council and the Wayne County Commission.

16. NONDISCRIMINATION PRACTICES

16.01 City shall require that all contractors, subcontractors, consultants and agents retained to perform work related to this Agreement comply with:

A. Titles VI and VII of the Civil Rights Act (42 U.S.C. §§ 2000d et. seq.) and the United States Department of Justice Regulations (28 C.F.R. Part 42) issued pursuant to these Titles.

B. The Age Discrimination Act of 1985 (42 U.S.C. §6101-07).

C. Section 504 of the Rehabilitation Act of 1973 (29 U.S.C. §794).

D. The Americans with Disabilities Act of 1990 (42 U.S.C. §12101 et. seq.) and its associated regulations.

E. The Elliot-Larson Civil Rights Act (P.A. 1976 No. 453)

F. The Persons With Disabilities Civil Rights Act (P.A. 1976 No. 220).

G. The anti-discrimination provisions as required by Section 120-192 of the Wayne County Code of Ordinances.

16.02 All contractors, subcontractors, consultants and agents retained by City to perform work related to this Agreement shall not:

A. Refuse to recruit, hire, employ, promote or to bar or discharge from employment an individual, or discriminate against an individual in compensation, terms, conditions or privileges of employment because of race, color, creed, national origin, age, marital status, handicap, sex, religion, familial status, height or weight.

B. Limit, segregate, or classify an employee or applicant for employment in a way which deprives or tends to deprive any individual of employment opportunities or otherwise adversely affects the employment status of an employee because of race, color, creed, national origin, age, marital status, handicap, sex, familial status, height or weight.

C. Print or publish or cause to be printed or published a notice, application, or advertisement relating to employment indicating a preference, limitation, specification, or discrimination based upon race, color, creed, national origin, age, marital status, handicap, sex, religion, familial status, height or weight.

D. Except as permitted by rules and regulations promulgated pursuant to Section 120-192 of the Wayne County Code of Ordinances, or applicable state or federal law, make or use a written or oral inquiry or form of application that elicits or attempts to solicit information concerning the race, color, creed, national origin, age, marital status, handicap, sex, religion, familial status, height or weight, of prospective employees. City also shall not make or keep a record of that information or disclose such information.

E. Make or use a written or oral inquiry or form of application that expresses a preference, limitation or specification based on religion, race, color, creed, national origin, age, height, weight, marital status, handicap, or sex.

16.03 City agrees that it will notify all of its contractors, subcontractors, consultants, or agents of their obligations relative to non-discrimination under this Agreement when soliciting the contractor, subcontractor, consultant, or agent. City will include the provisions of this Article in any contract, as well as provide the County with a copy of any agreement with a contractor, subcontractor, consultant, or agent completing work related to this Agreement.

16.04 All contractors, subcontractors, consultants and agents retained by City to perform work related to this Agreement shall not discriminate against any employee or applicant for employment, training, education, or apprenticeship connected directly or indirectly with the performance of this Agreement, with respect to hire, promotion, job assignment, tenure, terms, conditions or privileges of employment because of race, color, creed, national origin, age, marital status, handicap, sex, religion, familial status, height or weight. This Section does not apply if it is determined by the County Division of Human Relations that the requirements are bona fide occupational qualifications reasonably necessary to perform the duties required for employment. The burden of proof that the occupational qualifications are bona fide is upon City.

16.05 Breach of any of the covenants in this Article may be regarded as a material breach of this Agreement.

16.06 City acknowledges the right of the County Director of Human Relations to sue to enforce the provisions in this Article.

16.07 If City or any of its contractors, subcontractors, consultants, or agents does not comply with the non-discrimination provisions of this Agreement, the County may impose sanctions, as it determines to be appropriate, including but not limited to the cancellation, termination or suspension of this Agreement, in whole or in part.

16.08 In the event that City is or becomes subject to federal or state law which conflicts with the requirements of Section 120-192 of the Wayne County Code of Ordinances, the provisions of federal or state law shall apply and this Agreement shall be interpreted and enforced accordingly. In accordance with the Elliot-Larson Civil Rights Act, P.A. 1976 No. 453, as amended, MCL 37.2101 *et seq*., City covenants not to discriminate against an employee or applicant for employment with respect to hire, tenure, terms, conditions, or privileges of employment because of race, color, religion, national origin, age, sex, weight, height, or marital status, and to require a similar covenant on the part of any contractor, subcontractor, consultant, or agent employed in the performance of this Agreement.

17. ETHICS IN CONTRACTING

17.01 City and all of its contractors must comply with Article 12 of Chapter 120 of the Wayne County Code of Ordinances governing "Ethics in Public Contracting" or any similarly existing City ordinances.

18. NOTICES

18.01 All notices, consents, approvals, requests and other communications ("Notices") required or permitted under this Agreement must be given in writing and mailed by first-class mail and addressed as follows:

If to City:
Department of Parks and Recreation
City of Livonia
15100 Hubbard
Livonia, Michigan 48154

If to the County:
Director of Parks
Wayne County Parks
33175 Ann Arbor Trail
Westland, Michigan 48185
and
Director
Wayne County Department of Public Services
400 Monroe, Suite 300
Detroit, Michigan 48226

18.02 All notices are deemed given on the day of mailing. Either party to this Agreement may change its address for the receipt of notices at any time by giving notice to the other as provided. Any notice given by a party must be signed by an authorized representative of such party.

18.03 Termination notices, change of address notices, and other notices of a legal nature, are an exception and must be sent by registered or certified mail, postage prepaid, return receipt requested.

19. WAIVER OF ANY BREACH

19.01 No failure by a party to insist upon the strict performance of any term of this Agreement or to exercise any term after a breach constitutes a waiver of any breach of term. No

waiver of any breach affects or alters this Agreement, but every term of this Agreement remains effective with respect to any other then existing or subsequent breach.

20. SEVERABILITY OF PROVISIONS

20.01 If any provision of this Agreement or the application to any person or circumstance is, to any extent, judicially determined to be invalid or unenforceable, the remainder of this Agreement, or the application of the provision to persons or circumstances other than those as to which it is invalid or unenforceable, is not affected and is enforceable.

21. MERGER CLAUSE

21.01 This Agreement, including the Exhibits contains the entire agreement between the parties and all prior negotiations and agreements are merged in this document. Neither party has made any representations except those expressly set forth in this Agreement. No rights or remedies are, or will be acquired by either party by implication or otherwise unless set forth herein.

21.02 This Agreement may be executed in counterparts, each of which will be deemed an original but all of which together will constitute one agreement.

22. JURISDICTION AND LAW

22.01 This Agreement, and all actions arising from it, must be governed by, subject to, and construed according to the laws of the State of Michigan. Each party consents to the personal jurisdiction of any competent court in Wayne County, Michigan, for any action arising out of this Agreement. Each party will not commence any action against the other because of any matter arising out of this Agreement, in any courts other than those in the County of Wayne, State of Michigan unless original jurisdiction is in the United States District Court for the Eastern District of Michigan, Southern Division, the Court of Claims, the Michigan Supreme Court or the Michigan Court of Appeals.

23. MISCELLANEOUS

23.01 It is mutually understood and agreed that neither of the parties hereto shall be held responsible for damages occasioned by delay or failure to perform where due to fire, strike, flood, acts of God, unavailability of labor, material, legal acts of public authorities, or delays caused by public carriers or third person (including contractors or subcontractors) which cannot reasonably be foreseen or provided against.

23.02 The parties agree that upon termination of this Agreement, the following sections shall survive termination and shall remain in full force and effect: 5.02; 11; 12; 13; 14 and 22.

23.03 The term "County" includes the Charter County of Wayne and all other associated, affiliated, or subsidiary departments or divisions now existing or to be created, their agents, and employees.

23.04 This Agreement must not be construed as a waiver of any governmental immunity by the County or City, or any of their agencies, or employees, has as provided by statute or modified by court decisions.

23.05 The headings of the articles in this Agreement are for convenience only and must not be used to construe or interpret the scope or intent of this Agreement or in any way affect this Agreement.

24. AUTHORIZATION AND CAPABILITY

24.01 This Agreement has been approved, as evidenced by the attached Resolutions adopted by the Livonia City Council and the County Commission. Copies of such resolutions shall be attached to this Agreement.

24.02 Each party warrants that the person signing this Agreement is authorized to sign on behalf of its principal and is empowered to bind its principal to this Agreement.

25. SIGNATURE

25.01 The County and City, by their authorized officers and representatives have executed this Agreement as of the dates written below.

[SIGNATURES ON THE FOLLOWING PAGES]

City of Livonia
Rotary Park

County Commission approved and execution authorized by Resolution No. _____ Date: _____	CHARTER COUNTY OF WAYNE By: _____ **Warren C. Evans** Its: County Executive Date: _____

APPROVED AS TO FORM

By: Patricia Moore

DEPT. OF CORPORATION COUNSEL

5/1/2025

Livonia City Council approved and execution authorized by Resolution No. _____ Date: _____	CITY OF LIVONIA By: _____ **Maureen Miller Brosnan** Its: Mayor Date: _____

EXHIBIT A: LEGAL DESCRIPTIONS

Building restrictions as contained in
Liber 3969, Page 456, Register #C-15941
Recorded May 26, 1933.

No building or buildings to be erected upon said premises shall be finished on the exterior with tar paper, rolled roofing or used lumber; and that all buildings shall be painted with at least two coats of paint within six months after completion.

* * *

Lawyers Title Insurance Corporation

A Stock Company
Home Office ~ Richmond, Virginia

POLICY OF TITLE INSURANCE

SCHEDULE A

CASE NO. D-170800-F

AMOUNT
$--131,500.00--

NAME OF INSURED
CITY OF LIVONIA, a Michigan Municipal Corporation

DATE OF POLICY
December 8, 1970
at 8:00 A.M.

1. The estate or interest in the land described herein and which is covered by this policy is:

Fee Simple.

2. The estate or interest referred to herein is at Date of Policy vested in:

City of Livonia, a Michigan Municipal Corporation.

3. The land referred to in this Policy is described as follows:

Land in the Cityof Livonia, County of Wayne, State of Michigan, described as:

PARCEL I - That part of Section 10, Town 1 South, Range 9 East, City of Livonia, Wayne County, Michigan, described as: The East 1/2 of the North 2/3 of the West 1/2 of the Northeast 1/4 of Section 10,

PARCEL II - That part of the Northeast 1/4 of Section 10, Town 1 South, Range 9 East, described as: Beginning at a point on the East line of said section distant South 0 degrees 50 minutes 15 seconds East 1488.91 feet from the Northeast corner of Section 10 and proceeding West 1319.07 feet; thence South 0 degrees 42 minutes East 166.75 feet; thence North 89 degrees 39 minutes East 1319.35 feet to the East line of Section 10; thence North 0 degrees 50 minutes 15 seconds West along said line 158.71 feet to the point of beginning, except the East 320.00 feet thereof.

PARCEL III - That part of Section 10, Town 1 South, Range 9 East, City of Livonia, Wayne County, Michigan, described as: The South 10 acres of the North 60 acres of the East 1/2 of the Northeast 1/4 of Section 10, Town 1 South, Range 9 East, except the East 320.00 feet thereof.

Countersigned:
DETROIT BRANCH OFFICE

Issued at: DETROIT, MICHIGAN

Authorized Officer or Agent

ORIGINAL Page 1—Sched. A—Policy No. $ 203734

Policy 85—Litho in U.S.A.

American Land Title Association Owner's Policy—Form B—1970 Copyright 1969

Lawyers Title Insurance Corporation

A Stock Company
Home Office ~ Richmond, Virginia

Case No. D-170800-F

SCHEDULE B

This Policy does not insure against loss or damage by reason of the following:

1. Rights or claims of parties in possession not shown of record.
2. Unrecorded water, mineral and oil rights, unrecorded easements and claims of easement, boundary line disputes not disclosed of record and any matters which would be disclosed by an accurate survey and inspection of the premises.
3. Mechanics' liens not of record.
4. The dower or homestead rights, if any, of the wife of any individual insured or of any individual shown herein to be a party in interest.
5. Building and use restrictions not appearing of record in the chain of title, but omitting those, if any, based on race, color, religion or national origin.

6. Building and use restrictions recorded in Liber 3969, Page 456, Register No. C-15941. (As to Parcel II)

7. Path of Tarabusi Drain meandering through captioned lands, and any rights arising therefrom, as shown on tax maps.

8. Rights of the public in that portion of Parcel I of the captioned lands being used as a public street or highway. (Seven Mile Road)

9. 1970 County Tax - due.
1970 City Tax - due.

1/5/71 od

ORIGINAL

Policy 85 Mich.—Litho in U.S.A.

American Land Title Association Owner's Policy—Form B—1970 Copyright 1969

Lawyers Title Insurance Corporation F549052

Form 562 1-70
QUIT CLAIM DEED—Statutory Form
C.L. 1948, 565.152 M.S.A. 26.572

KNOW ALL MEN BY THESE PRESENTS: That PAUL YOVEFF and OLIVE YOVEFF, his wife,

whose address is 18585 Merriman Road, Livonia, Michigan

Quit Claim(s) to CITY OF LIVONIA, a Michigan Municipal Corporation

whose address is 33001 Five Mile Road, Livonia, Michigan 48154

LEGAL DESCRIPTION APPROVED 9/24/70 OK NSC

the following described premises situated in the City of Livonia

County of Wayne and State of Michigan, to-wit: That part of the N.E. 1/4 of Section 10, T. 1 S., R. 9 E., described as beginning at a point on the E. line of said section distant S. 0° 50' 15" E. 1488.91 feet from the N.E. corner of Section 10 and proceeding W. 1319.07 feet; thence S. 0° 42' E. 166.75 feet; thence N. 89° 39' E. 1319.35 feet to the E. line of Section 10; thence N. 0° 50' 15" W. along said line 158.71 feet to the point of beginning, except the E. 320.00 feet thereof.

F549052

RECORDED NOV 30 1970 AT 8 O'CLOCK A.M.
BERNARD J. YOUNGBLOOD, Register of Deeds
WAYNE COUNTY, MICHIGAN 48226

NO REVENUE ATTACHED

APPROVED AS TO FORM
DEPARTMENT OF LAW
BY
DATE 10-26-70

for the full consideration of One Dollar ($1.00) (Public Act 67 of 1969, Section 5 (j))

Dated this 30th day of September 19 70

Witnesses:

John K. Yoveff
John K. Yoveff

Mary Yoveff
Mary Yoveff

Signed and Sealed:

Paul Yoveff (L.S.)
Paul Yoveff

Olive Yoveff (L.S.)
Olive Yoveff

(L.S.)

(L.S.)

STATE OF MICHIGAN
COUNTY OF Wayne } ss.

The foregoing instrument was acknowledged before me this day of October 19 70
by Paul Yoveff and Olive Yoveff, his wife,

My commission expires
Dec. 4, 1972

John K. Yoveff, Notary Public
Notary Public Wayne County, Michigan

Instrument Drafted by Harry C. Tatigian

Business Address 33001 Five Mile Road, Livonia, Michigan

County Treasurer's Certificate	City Treasurer's Certificate

Recording Fee

State Transfer Tax

745761

Tax Parcel #

When recorded return to Livonia City Clerk
33001 Five Mile Road, Livonia, Mich. 48154

Send subsequent tax bills
to City of Livonia
33001 Five Mile Road, Livonia,
Michigan 48154

LIT 1002 PA100 (61)

Lawyers Title Insurance Corporation F549053

Form 562 1-70
QUIT CLAIM DEED—Statutory Form
C.L. 1948, 565.152 M.S.A. 26.572

KNOW ALL MEN BY THESE PRESENTS: That M. J. FRANJAC and GRACE FRANJAC, his wife,

whose address is 37355 Eight Mile Road, Livonia, Michigan

Quit Claim(s) to CITY OF LIVONIA, a Michigan Municipal Corporation

whose address is 33001 Five Mile Road, Livonia, Michigan 48154

LEGAL DESCRIPTION APPROVED 9/24/70 OK AK

the following described premises situated in the City of Livonia

County of Wayne and State of Michigan, to-wit: That part of Section 10, T. 1 S., R. 9 E., City of Livonia, Wayne County, Michigan, described as the E. 1/2 of the N. 2/3 of the W. 1/2 of the N.E. 1/4 of Section 10.

RECORDED NOV 30 1970 AT 8:49 O'CLOCK A.M.
BERNARD J. YOUNGBLOOD, Register of Deeds
WAYNE COUNTY, MICHIGAN 48226

F549053

APPROVED AS TO FORM
DEPARTMENT OF LAW
BY Harry C. Tatigian
DATE 10-26-70

for the full consideration of One Dollar ($1.00) (Public Act 67 of 1969, Section 5 (j))

Dated this 2nd day of October 19 70

Witnesses:

Francis A. Browning
Francis A. Browning

Dolores A. Browning
Dolores A. Browning

Signed and Sealed:

M. J. Franjac (L.S.)
M. J. Franjac

Grace Franjac (L.S.)
Grace Franjac

(L.S.)

(L.S.)

STATE OF MICHIGAN
COUNTY OF Wayne } ss.

The foregoing instrument was acknowledged before me this 2nd day of October 19 70
by M. J. Franjac and Grace Franjac, his wife.

My commission expires March 8, 1974.

Francis A. Browning
FRANCIS A. BROWNING
Notary Public Wayne County, Michigan

Instrument Drafted by Harry C. Tatigian

Business Address 33001 Five Mile Road, Livonia, Michigan

County Treasurer's Certificate	City Treasurer's Certificate
NO REVENUE ATTACHED	

Recording Fee

State Transfer Tax

745761

Tax Parcel # 10N

When recorded return to Livonia City Clerk
33001 Five Mile Road, Livonia, Mich. 48154

Send subsequent tax bills
to City of Livonia
33001 Five Mile Road, Livonia,
Michigan 48154

Lawyers Title Insurance Corporation F549051

LIT JUL PAID (65)

Form 562 1-70
QUIT CLAIM DEED—Statutory Form
C.L. 1948, 565.152 M.S.A. 26.572

KNOW ALL MEN BY THESE PRESENTS: That WILLIAM N. EDMONDS and MARY ELLEN EDMONDS, his wife

whose address is 18525 Merriman Road, Livonia, Michigan

Quit Claim(s) to CITY OF LIVONIA, a Michigan Municipal Corporation

whose address is 33001 Five Mile Road, Livonia, Michigan 48154

LEGAL DESCRIPTION APPROVED 9/4/70

the following described premises situated in the City of Livonia

County of Wayne and State of Michigan, to-wit: That part of Section 10, T. 1 S., R. 9 E., City of Livonia, Wayne County, Michigan, described as the S. 10 acres of the N. 60 acres of the E. 1/2 of the N.E. 1/4 of Section 10, T. 1 S., R. 9 E., except the E. 320.00 feet thereof. (7.58 acres + -)

F549051

RECORDED NOV 30 1970 AT 8:49 O'CLOCK A M
BERNARD J. YOUNGBLOOD, Register of Deeds
WAYNE COUNTY, MICHIGAN 48226

APPROVED AS TO FORM
DEPARTMENT OF LAW
BY
DATE 10-26-70

for the full consideration of One Dollar ($1.00) (Public Act 67 of 1969, Section 5 (j))

Dated this 1st day of October 19 70

Witnesses:

Clarence R. Charest

Elizabeth J. MacKenzie

Signed and Sealed:

William N. Edmonds (L.S.)

Mary Ellen Edmonds (L.S.)

(L.S.)

(L.S.)

STATE OF MICHIGAN
COUNTY OF Wayne } ss.

The foregoing instrument was acknowledged before me this 1st day of October 19 70 by William N. Edmonds and Mary Ellen Edmonds, his wife,

My commission expires January 2, 1973

Elizabeth J. MacKenzie
Notary Public Wayne County, Michigan

Instrument Drafted by Harry C. Tatigian Business Address 33001 Five Mile Road, Livonia, Michigan

County Treasurer's Certificate	City Treasurer's Certificate
NO REVENUE ATTACHED	

Recording Fee

State Transfer Tax

745761

Tax Parcel #

When recorded return to Livonia City Clerk
33001 Five Mile Road, Livonia, Mich. 48154

Send subsequent tax bills to City of Livonia
33001 Five Mile Road, Livonia,
Michigan 48154

DEPARTMENT OF LAW

CITY ATTORNEY
HARRY C. TATIGIAN
ASSISTANT CITY ATTORNEYS
ROBERT M. FEINBERG
GARY L. SACKETT

33001 FIVE MILE ROAD
LIVONIA, MICHIGAN 48154
GARFIELD 1-2000

EDWARD H. McNAMARA
MAYOR

OCT 26 '70 PM

RECEIVED
CITY OF LIVONIA
OFFICE OF THE CITY CLERK
October 26, 1970

TO: ADDISON W. BACON, CITY CLERK

FROM: DEPARTMENT OF LAW

SUBJECT: WAYNE COUNTY CIRCUIT COURT ACTION NO. 142667
(Park Site Designations J-36, J-37 and J-38

REF: CR-997-70

Dear Sir:

By letter dated October 26, 1970 we transmitted for Council acceptance, and recording thereafter, three Quit Claim Deeds conveying to the City Park Site Designations J-36, J-37 and J-38. In connection with the aforesaid property transactions we are transmitting to you herewith the following documents:

1. Three Closing Statements:
   a. Park Site J-36 - Paul Yoveff and Olive Yoveff, his wife;
   b. Park Site J-37 - William N. Edmonds and Mary Ellen Edmonds, his wife; and
   c. Park Site J-38 - M. J. Franjac and Grace Franjac, his wife.
2. Statement issued by Lawyers Title Insurance Corp. in the amount of $528.00, to cover the cost of the title policy, which is to be paid by the City of Livonia and which sum was authorized for payment in council resolution #997-70.
3. Order to Issue Owner's Policy.

Lawyers Title
11-24-70

4. Commitment for Title Insurance dated 9/29/70, No. D-170800-F, issued by Lawyers Title Insurance Corp. which covers the three park sites.

5. True Copy of the Verdict and Judgment of the Court covering Parcel J-37 (Edmonds) issued in the litigation of the said park site. (TO BE RECORDED)

6. True Copy of the Verdict of the Jury covering Parcels J-36 and J-38 (Yoveffs and Franjacs) issued in the litigation of the said park sites. (TO BE RECORDED)

When the deeds referred to in paragraph 1 are recorded the documents under items 5 and 6 should be recorded at the same time.

Very truly yours,

Harry C. Tatigian, City Attorney

HCT:s
encs. - as above
file

CLOSING STATEMENT

RESPONDENTS: (Sellers)
Paul Yoveff and
Olive Yoveff
18585 Merriman Road
Livonia, Michigan

PETITIONER: (Purchaser)
City of Livonia, a Michigan Municipal Corporation
33001 Five Mile Road
Livonia, Michigan 48154

PROPERTY:
That part of the N.E. 1/4 of Section 10, T. 1 S., R. 9 E., described as beginning at a point on the E. line of said section distant S. 0° 50' 15" E. 1488.91 feet from the N.E. corner of Section 10 and proceeding W. 1319.07 feet; thence S. 0° 42' E. 166.75 feet; thence N. 89° 39' E. 1319.35 feet to the E. line of Section 10; thence N. 0° 50' 15" W. along said line 158.71 feet to the point of beginning, except the E. 320.00 feet thereof.

CREDITS TO RESPONDENTS

Verdict of Jury	$15,000.00
Tax Proration (10-1-70 to 11-30-70)	62.14
Total credits to respondents . . .	$15,062.14

ACCEPTED

RESPONDENTS:

Paul Yoveff and Olive Yoveff

by: John K. Yoveff
John K. Yoveff
their attorney
12928 W. Warren
Dearborn, Michigan 48126

PETITIONER:

City of Livonia, a Michigan Municipal Corporation

by: Harry C. Patigian
Harry C. Patigian
City Attorney
33001 Five Mile Road
Livonia, Michigan 48154

Dated: October 1, 1970

Pursuant to Council Resolution #147-69 adopted February 19, 1969

CLOSING STATEMENT

RESPONDENTS:
(Sellers)

William N. Edmonds and
Mary Ellen Edmonds
18525 Merriman Road
Livonia, Michigan 48152

PETITIONER:
(Purchaser)

City of Livonia, a Michigan Municipal Corp.
33001 Five Mile Road
Livonia, Michigan 48154

PROPERTY:

That part of Section 10, T. 1 S., R. 9 E., City of Livonia, Wayne County, Michigan, described as the S. 10 acres of the N. 60 acres of the E. 1/2 of the N.E. 1/4 of Section 10, T. 1 S., R. 9 E., except the E. 320.00 feet thereof.

CREDITS TO RESPONDENTS

Verdict & Judgment of the Court	$23,500.00
Tax Proration (10-1-70 to 11-30-70)	126.26
Total credits to respondents . . .	$23,626.26

ACCEPTED

RESPONDENTS:

William N. Edmonds and
Mary Ellen Edmonds

by: for Clarence R. Charest
Clarence R. Charest
their attorney
32437 Five Mile Road
Livonia, Michigan

PETITIONER:

City of Livonia, a Michigan
Municipal Corporation

by: Harry C. Tatigian, City Attorney
33001 Five Mile Road
Livonia, Michigan 48154

Dated: October 19, 1970

Pursuant to Council Resolution
#147-69 adopted February 19, 1969

CLOSING STATEMENT

RESPONDENTS: (Sellers)
M. J. Franjac and
Grace Franjac
37355 Eight Mile Road
Livonia, Michigan

PETITIONER: (Purchaser)
City of Livonia, a Michigan Municipal Corporation
33001 Five Mile Road
Livonia, Michigan 48154

PROPERTY:
That part of Section 10, T. 1 S., R. 9 E., City of Livonia, Wayne County, Michigan, described as the E. 1/2 of the N. 2/3 of the W. 1/2 of the N.E. 1/4 of Section 10 (Bureau of Taxation Parcel 10N)

CREDITS TO RESPONDENTS

Verdict of Jury	$93,000.00
Tax Proration (10-1-70 to 11-30-70)	468.08
Total credits to respondents . . .	$93,468.08

ACCEPTED

RESPONDENTS:

M. J. Franjac and Grace Franjac

by: Francis A. Browning
Francis A. Browning
Berry, Hopson, Francis & Mack
their attorneys
Twentieth Floor Cadillac Tower
Detroit, Michigan 48226

PETITIONER:

City of Livonia, a Michigan Municipal Corporation

by: Harry C. Tatigian, City Attorney
33001 Five Mile Road
Livonia, Michigan 48154

Dated: October 21 1970

Pursuant to Council Resolution #147-69 adopted February 19, 1969

Lawyers Title Insurance Corporation

D-170800-F

HOME OFFICE - RICHMOND, VIRGINIA
MICHIGAN STATE OFFICE
735 GRISWOLD STREET, DETROIT, MICHIGAN 48226

APPLICANT AND ADDRESS

Lawyers Title Insurance Corporation, herein called the Company, hereby agrees to issue a policy of title insurance as hereinafter set forth upon satisfactory compliance with the requirements herein set forth.

The reverse side hereof is part of this commitment.

FORM OF POLICY TO BE ISSUED

A.L.T.A. OWNER'S POLICY	A.L.T.A. MORTGAGE POLICY WITHOUT EXCEPTIONS	MORTGAGE POLICY WITH EXCEPTIONS
$ 131,500.00	$	$

PARTY TO BE INSURED City of Livonia.

Description Of Subject Land

Located In City of Livonia, Wayne County, Michigan

(SEE ATTACHED RIDER NO. 1)

Tax Item No. 10N-as to Parcel 1
10K1-as to Parcel 2
10L1-as to Parcel 3

OWNER, ENCUMBRANCES, EXCEPTIONS TO TITLE, UNPAID TAXES, ASSESSMENTS AND REQUIREMENTS FOR ISSUANCE OF POLICY.

1. OWNER: Marion J. Franjac and Grace M. Franjac, his wife, as to Parcel 1; Paul Yoveff and Olive M. Yoveff, his wife, as to Parcel 2; and William N. Edmonds and Mary Ellen Edmonds, his wife, as to Parcel 3.

REQUIREMENT: RECORD DEEDS FROM ABOVE OWNERS TO CITY OF LIVONIA, A MICHIGAN MUNICIPAL CORPORATION.

2. Building and Use Restrictions recorded in Liber 3969, Page 456, Register No. C-15941, as to Parcel Two, only.

REQUIREMENT: NONE. WILL BE SHOWN IN FINAL POLICY.

3. Path of Tarabusi Drain meandering through captioned lands and any rights arising therefrom, as shown on tax maps.

REQUIREMENT: NONE. WILL BE SHOWN IN FINAL POLICY.

(SEE ATTACHED RIDER NO. 2)

FOR INFORMATION CALL R.S. Olivier EXAMINER, PHONE 963-5810

This commitment is preliminary to the issuance of a policy of title insurance and shall not be binding until it shall have been countersigned by an Agent or Authorized Officer of the Company.

This commitment is valid and binding for a period of 90 days only from the effective date hereof. In witness whereof, the Company has caused this commitment to be executed pursuant to its by-laws

at Detroit, **Michigan effective as of** September 24, 1970 at 8:00A.M.

Lawyers Title Insurance Corporation

Frederick A. Thomson
SENIOR VICE PRESIDENT

COUNTERSIGNED BY Daniel DeGrave
AGENT OR AUTHORIZED OFFICER

AUDIT NUMBER C 518218

OVER

COMMITMENT RIDER No. 1

This rider is attached to and made a part of Commitment bearing Case # D-170800-F

PARCEL ONE:

That part of Section 10, Town 1 South, Range 9 East, City of Livonia, Wayne County, Michigan, described as the East 1/2 of the North 2/3 of the West 1/2 of the Northeast 1/4 of Section 10.

PARCEL TWO:

That part of the Northeast 1/4 of Section 10, Town 1 South, Range 9 East, described as beginning at a point on the East line of said sectinn distant South 0 degrees 50 minutes 15 seconds East 1488.91 feet from the Northeast corner of Section 10 and proceeding West 1319.07 feet; thence South 0 degrees 42 minutes East 166.75 feet; thence North 89 degrees 39 minutes East 1319.35 feet to the East line of Section 10; thence North 0 degrees 50 minutes 15 seconds West along said line 158.71 feet to the point of beginning, except the East 320.00 feet thereof.

PARCEL THREE:

That part of Section 10 , Town 1 South, Range 9 East, City of Livonia, Wayne County, Michigan, described as the South 10 acres of the North 60 acres of the East 1/2 of the Northeast 1/4 of Section 10, Town 1 South, Range 9 East, except the East 320.00 feet thereof.

Lawyers Title Insurance Corporation

Frederick A. Thomas
SENIOR VICE PRESIDENT

COUNTERSIGNED BY

Donald De Grave
AGENT OR AUTHORIZED OFFICER

COMMITMENT RIDER No. 2

This rider is attached to and made a part of Commitment bearing Case # D-170800-F

4. Condemnation. Proceedings now pending in Wayne County Circuit Court, Civil Action No. 142667, to take these and other land for park purposes, as disclosed by Lis Pendens recorded in Liber 17160, Page 451, Register No. 59283.

REQUIREMENT: RECORD ABOVE REQUESTED DEEDS.

5. Rights of the public in that portion of Parcel One of the captioned lands being used as a public street or highway. (Seven Mile Road).

REQUIREMENT: NONE. ABOVE TO BE SHOWN IN FINAL POLICY.

6. County Tax: 1969 Paid

City Tax: 1969 Paid

Lawyers Title Insurance Corporation

Frederick A. Thomson
SENIOR VICE PRESIDENT

COUNTERSIGNED BY

Darrell DeGrave
AGENT OR AUTHORIZED OFFICER

F571276 L17630 PA490

RESTRICTIVE COVENANTS AND AGREEMENT

WHEREAS, Grantor, GREENFIELD CONSTRUCTION COMPANY, INC., 13040 Merriman Road, Livonia, Michigan, a Michigan Corporation, hereinafter referred to as Owner, is the owner in fee simple of the real property described in CLAUSE I of this declaration, and is desirous of subjecting the real property described in CLAUSE I to the conditions, convenants, restrictions, reservations and easements hereinafter set forth, each and all of which is and are for the benefit of said property and/or any portion thereof, and shall inure to the benefit of and pass with said property and each and every parcel thereof, and shall apply to and bind the successors, administrators, executors, and assigns of grantor herein, and any owner, lessee, tenant, or holder of any legal or equitable interest whatsoever:

NOW, THEREFORE, the Owner hereby declares that the real property described in and referred to in CLAUSE I hereof is, and shall be held, transferred, sold, conveyed and occupied subject to the conditions, covenants, restrictions, reservations and easements hereinafter set forth.

F571276

RECORDED FEB 17 1971 AT 9 52 A.M.
BERNARD J. YOUNGBLOOD, Register of Deeds
WAYNE COUNTY, MICHIGAN 48226

CLAUSE I

The land to be affected by the restrictive covenants contained herein is described as follows:

Land in the City of Livonia, Wayne County, Michigan, being a part of the S. E. 1/4 of Section 7, T. 1 S., R. 9 E., more particularly described as:

Beginning at a point on the north line of the Six Mile Road (120 ft. wd.), said point being N. 0° 07'30" E. 60.00 ft. from the southeast corner of said Section 7; thence S. 89° 58' W., along the north line of said Six Mile Road, 2502.18 ft. to a point; thence N. 0° 02' E. 2574.40 ft. to a point on the East and West 1/4 line of said Section 7; thence N. 89° 58' 50" E. 2506.30 ft. to the East 1/4 corner of said Section 7; thence S. 0° 07' 30" W. along the east line of said Section 7, 2573.80 ft. to the point of beginning, excepting therefrom the east 60.00 ft. thereof, said east 60.00 ft. being the west 1/2 of Newburgh Road, 120 ft. wd.

LEGAL DESCRIPTION APPROVED 11/10/70

and

Land in the City of Livonia, Wayne County, Michigan, being a part of the Northeast 1/4 of Section 18, T. 1 S., R. 9 E., more particularly described as:

LEGAL DESCRIPTION APPROVED 11/10/70

Beginning at a point on the east line of Section 18, said point being S. 0° 26' 10" E. 60.00 ft. from the Northeast corner of said Section 18; thence S. 0° 26' 10" E. along the said east line of Section 18, 1261.37 ft. to a point; thence S. 89° 50' 10" W. 1887.32 ft. to a point; thence N. 0° 10' 52" W. 1265.65 ft. to a point on the south line of the Six Mile Road (120 ft. wd.); thence N. 89° 58' E. along the south line of said Six Mile Road, 1882.45 ft. to the point of beginning, excepting therefrom the East 60.00 ft. thereof, said east 60.00 ft. being the west 1/2 of Newburgh Road, 120 ft. wd.

CLAUSE II

GENERAL PURPOSES OF COVENANTS

The real property described in CLAUSE I hereof is subjected to the conditions, covenants, restrictions, reservations and easements hereby declared to insure proper use and appropriate development and improvement of the property described in CLAUSE I hereof; to protect the owners of building sites against such improper use of surrounding building sites as will depreciate the value of their property; to insure adequate and reasonable development of said property; to encourage the erection of attractive improvements thereon; and in general to provide adequately for a high type and quality of improvements in and upon said property.

CLAUSE III

OPEN SPACE

Certain portions of the property described in CLAUSE I hereof are to be used and utilized for landscaping and beautification purposes only, and said portions shall be designated as "open space" and are described as follows:

DESCRIPTION #1

Land in the City of Livonia, Wayne County, Michigan, being a part of the S. E. 1/4 of Section 7, T. 1 S., R. 9 E., more particularly described as:

LEGAL DESCRIPTION APPROVED 11/10/70

Beginning at a point on the north line of the Six Mile Road (120 ft. wd.), said point being N. 0° 07' 30" E. 60.00 ft. and S. 89° 58' W. 183.00 ft. from the southeast corner of said Section 7; thence S. 89° 58' W. along the north line of said road, 830.17 ft. to a point; thence N. 0° 02' W. 100.00 ft. to a point; thence N. 89° 58' E. 830.45 ft. to a point; thence S. 0° 07' 30" W. 100.00 ft. to the point of beginning.

DESCRIPTION #2

Land in the City of Livonia, Wayne County, Michigan, being a part of the S. E. 1/4 of Section 7, T. 1 S., R. 9 E., more particularly described as:

LEGAL DESCRIPTION APPROVED 11/10/70

Beginning at a point on the west line of Newburgh Road (120 ft. wd.) said point being N. 0° 07' 30" E. 210.00 ft. and S. 89° 58' W. 60.00 ft. from the southeast corner of said Section 7; thence S. 89° 58' W. 100.00 ft. to a point; thence N. 0° 07' 30" E, parallel to the east line of said Section 7, 1513.84 ft, to a point; thence N. 89° 58' 50" E. 100.00 ft. to a point on the west line of said Newburgh Road; thence S. 0° 07' 30" W. 1513.81 ft. to the point of beginning.

DESCRIPTION #3

Land in the City of Livonia, Wayne County, Michigan, being a part of the S. E. 1/4 of Section 7, T. 1 S., R. 9 E., more particularly described as:

LEGAL DESCRIPTION APPROVED 11/10/70

Beginning at a point on the east line of Section 7, said point being N. 0° 07' 30" E. 60.00 ft. from the S. E. corner of Section 7; thence S. 89° 58' W. along the north line of the Six Mile Road, 183.00 ft. to a point; thence N. 0° 07" 30" E. 150.00 ft. to a point; thence N. 89° 58' E. 183.00 ft. to a point on the east line of Section 7; thence S. 0° 07' 30" W. 150.00 ft. to the point of beginning.

DESCRIPTION #4

Land in the City of Livonia, Wayne County, Michigan, being a part of the Northeast 1/4 of Section 18, T. 1 S., R. 9 E., more particularly described as:

L DESCRIPTION APPROVED 11/10/70

Beginning at a point on the east line of Section 18, said point being S. 0° 26' 10" E. 60.00 ft. from the N. E. corner of Section 18; thence S. 0° 26' 10" E. along the east line of Section 18, 150.00 ft. to a point; thence S. 89° 58' W. 183.00 ft. to a point; thence N. 0° 26' 10" W. 150.00 ft. to a point on the south line of the Six Mile Road (120 ft. wd.); thence N. 89° 58' E. along said south line 183.00 ft. to the point of beginning.

DESCRIPTION #5

Land in the City of Livonia, Wayne County, Michigan, being a part of the Northeast 1/4 of Section 18, T. 1 S., R. 9 E., more particularly described as:

LEGAL DESCRIPTION APPROVED 11/10/70

Beginning at a point on the south line of the Six Mile Road (120 ft. wd.) said point being S. 0° 26' 10" E. 60.00 ft. and S. 89° 58' W. 183.00 ft. from the northeast corner of said Section 18; thence S. 89° 58' W. along the south line of the said Six Mile Road 830.39 ft. to a point; thence S. 0° 02' E. 75.00 ft. to a point; thence N. 89° 58' E. 830.92 ft. to a point; thence N. 0° 26' 10" W. 75.00 ft. to the point of beginning.

DESCRIPTION #6

Land in the City of Livonia, Wayne County, Michigan, being a part of the Northeast 1/4 of Section 18, T. 1 S., R. 9 E., more particularly described as:

LEGAL DESCRIPTION APPROVED

Beginning at a point on the west line of Newburgh Road (120 ft. wd.), said point being S. 0° 26' 10" E. 210.00 ft. and S. 89° 58' W. 60.00 ft. from the northeast corner of said Section 18; thence S. 0° 26' 10" E. along the west line of said Newburgh Road, 381.37 ft. to a point; thence S. 89° 58' W. 75.00 ft. to a point; thence N. 0° 26' 10" W. 381.37 ft. to a point; thence N. 89° 58' E. 75.00 ft. to the point of beginning.

CLAUSE IV

LANDSCAPING

The owners, developers, lessees, operators, and tenants and their respective heirs, administrators, executors and assigns shall be required to furnish, install and maintain all plantings and landscaping within the property described in CLAUSE I hereof irrespective of road or boulevard dedication to the City of Livonia.

CLAUSE V

RIGHT OF WAY DEDICATION

The Owner agrees to forthwith record a copy of the Restrictive Covenants recited herein and thereafter to dedicate to the City of Livonia a right-of-way on Six Mile Road which right-of-way shall have a minimum width of one hundred eighty (180') feet, the eastern terminus of which shall be Newburgh Road and the western terminus of which shall be the I-96/I-275 expressway; provided, however, that such dedication shall not be made until:

(1) The Planning Commission of the City of Livonia designates on the Master Thoroughfare Plan of the City of Livonia a right-of-way for this thoroughfare in the manner hereinbefore described and that such action by said Commission takes place within a period of nine (9) months from the time that the Planning Commission receives notice from the Owner that the Restrictive Covenants recited herein have been recorded with the Wayne County Register of Deeds; and

(2) The City of Livonia prepares a traffic feasibility study within the

aforesaid nine (9) month period, the purpose of which study will be to ascertain and establish the need for the ultimate construction and improvement of a boulevard within the right-of-way hereinbefore described.

CLAUSE VI

ARCHITECTURAL DEVELOPMENT AND CONSTRUCTION

The Owner and its respective successors and assigns shall at all times retain the right of approving and controlling the architectural development and construction in, on or upon the aforedescribed property, provided however, that such architecture and construction approval and control shall not be in conflict with any of the applicable rules, regulations or ordinances of the City of Livonia.

CLAUSE VII

REVIEW OF DEVELOPMENT PLANS

Prior to any site plans being submitted for approval with respect to the described property and/or applications being made for building permits, the Owner shall submit to a Planning Committee of the Planning Commission of the City of Livonia and to its City Planning Department proposed building plans, specifications, drawings and such other material as may be requested, at least thirty (30) days prior to submission of said site plans and the said Committee and the Planning Department of the City of Livonia shall indicate their decision with respect to such proposals within a period of thirty (30) days after such submission. The intent of this clause is to permit the City Planning Department and the aforesaid Committee to review all proposals made with respect to the development of the subject property and shall not be construed in any manner whatsoever as limiting such rights as the Owner of the property may have in accordance with the provisions of applicable rules, regulations, ordinances and/or laws.

CLAUSE VIII

MERGING TRAFFIC LANES

Merging traffic lanes as required and to be constructed on Six Mile Road and Newburgh Road will be provided by the Owner at its sole cost and expense; such construction to take place in accordance with applicable laws and City

Ordinances.

CLAUSE IX

LIMITATION OF INGRESS AND EGRESS DURING CONSTRUCTION

During the construction of the proposed development of the subject property by the Owner, it shall be the obligation of the Owner to limit points of egress and ingress to the subject property in accordance with any reasonable directives of the Livonia Police Department.

CLAUSE X

INSTALLATION AND CONSTRUCTION OF SIGNS

With respect to any and all development and/or construction on the property described in CLAUSE I, it shall be required that prior to the installation and construction of any and all kinds and manner of signs, whether detached, affixed or free-standing, written approval of the Owner or its duly designated agent be obtained. This Clause shall be applicable to the subject property regardless of any ordinance provisions promulgated by the City of Livonia which might otherwise permit the installation of such signs.

CLAUSE XI

INGRESS AND EGRESS - MOTOR VEHICLE TRAFFIC

No points of egress or ingress shall be permitted with respect to the subject property described in CLAUSE I relating to public rights-of-way other than those shown on the plan (a copy of which is attached hereto, made a part hereof and marked Exhibit A) for the development of subject property, and no changes or revisions shall be made in said plan until such time as such changes have been jointly approved by the Owner and by a Planning Committee of the Planning Commission of the City of Livonia. The application and effect of this Clause shall be limited to motor vehicle traffic only and shall not be applicable to pedestrian traffic.

CLAUSE XII

SINGLE FAMILY RESIDENTIAL LAND

Any change in the single-family residential land use as proposed in the

plan attached hereto to either commercial, professional office or multi-family, shall not be proposed without the approval of the City of Livonia Planning Commission.

CLAUSE XIII

APPROVAL OF CHANGES IN DEVELOPMENT PLAN

The development of the subject property shall be strictly limited to the plan attached hereto (Exhibit A) and no changes shall be made therein except upon joint approval of same by the Owner and the Planning Commission of the City of Livonia. This action shall not be construed in any manner whatsoever as superseding applicable provisions of the City rules, regulations and ordinances.

CLAUSE XIV

DURATION

Each of the conditions, covenants, restrictions and reservations set forth above shall run with the land and bind the Owner, its successors and assigns, and all parties claiming by, through or under it or them, and it shall be the obligation of any such person or corporation to conform to and observe said restrictions as to the use of building sites, and the construction of improvements thereon, but no restrictions herein set forth shall be personally binding on any corporation, person, or persons, except in respect to breaches committed during its, his or their seisin of, or title to said land, and the Owner or any subsequent owner or owners of any of the above described land shall have the right to sue for observance of the restrictions above set forth, in addition to ordinary legal action for damages, and the failure of Owner to enforce any of the restrictions herein set forth at the time of its violation, shall in no event be deemed to be a waiver of the right to do so as to any subsequent violation. Further, the City of Livonia is hereby authorized to institute legal action to enforce and obtain compliance with the provisions hereinbefore set out and contained in these restrictive covenants and agreement. The violation of these restrictions shall not defeat nor render invalid the lien or any mortgage (or deed of trust) made in good

faith and for value, nor shall there be any right of reverter in the event of a breach.

In the event any covenant or condition or restriction hereinabove contained, or any portion thereof, is invalid or void, such invalidity or voidness shall in no way affect any other covenant, condition or restriction.

These Restrictive Covenants shall remain effective until January 1, 1990, and no longer, unless renewed in writing by the owners of at least sixty (60%) percent in area of the subject land.

Dated this 29th day of October, 1970.

GREENFIELD CONSTRUCTION COMPANY, INC.
a Michigan Corporation

Signed in the presence of:

Ronald C. Seeley

David F. Meinzinger

By _____
Its President - Angelo Di Ponio

STATE OF MICHIGAN)
) ss.
COUNTY OF WAYNE)

On this 29TH day of OCTOBER, 1970, before me, a notary public in and for said County, personally appeared Angelo Di Ponio to me personally known, who, being by me duly sworn, did say that he is the President of Greenfield Construction Company, Inc., the corporation named in and which executed the within instrument, and that said instrument was signed in behalf of said corporation by authority of its Board of Directors, and said Angelo Di Ponio acknowledges said instrument to be the free act and deed of said corporation.

APPROVED AS TO FORM
DEPARTMENT OF LAW
BY _____
DATE NOVEMBER 20, 1970

Margaret J. Tuomari
Notary Public, Wayne County, Michigan
MARGARET J. TUOMARI
My commission expires Feb. 26, 1974

When recorded return to

Office of the City Clerk
Livonia City Hall
33001 Five Mile Road
Livonia, Michigan 48154

This instrument drafted by
John R. Mann
1100 Commonwealth Building
Detroit, Michigan 48226

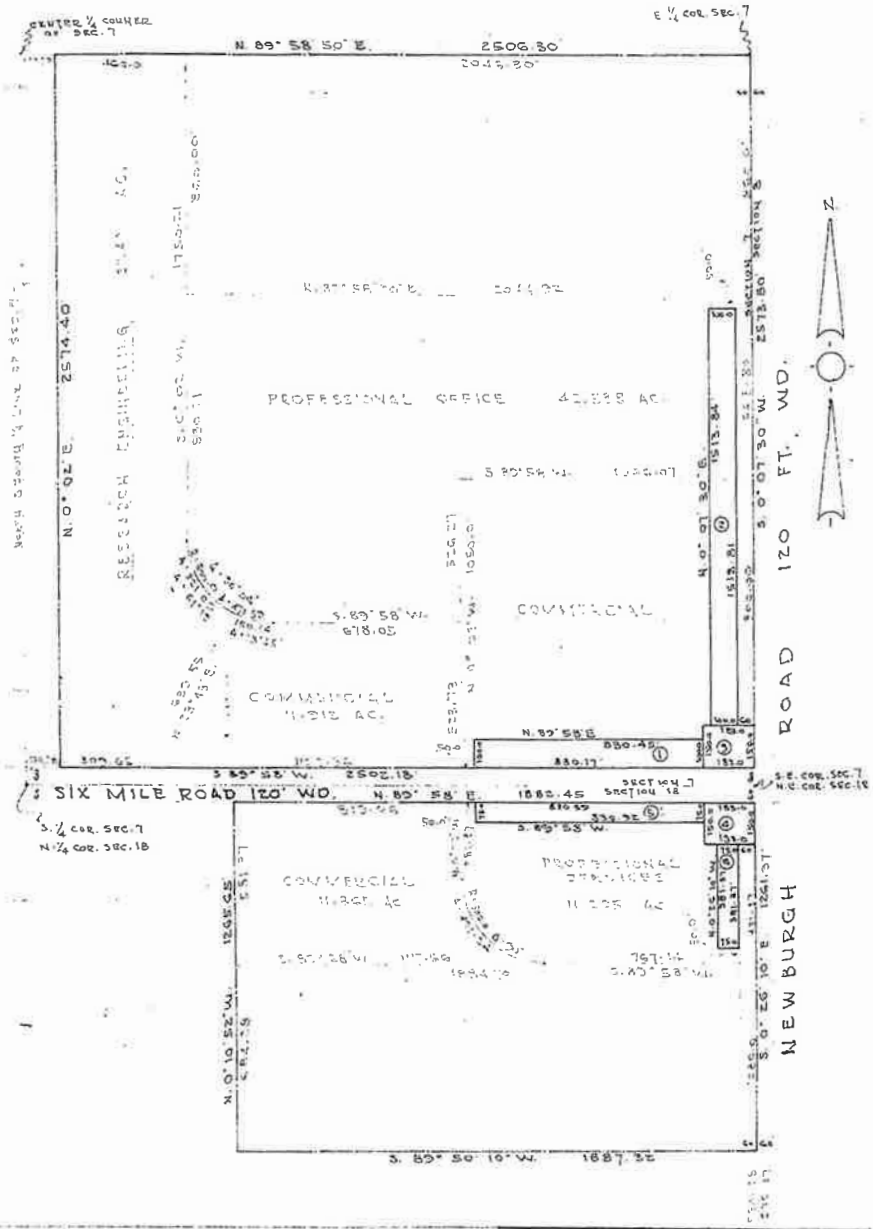

PLAT OF SURVEY
OF PART OF SECTIONS 7 & 18, T.1S., R.9E.
CITY OF LIVONIA
WAYNE COUNTY — MICHIGAN

LIVONIA CIVIL ENGINEERS
& LAND SURVEYORS, INC.
29200 FIVE MILE ROAD LIVONIA, MICHIGAN
GA 7-5310 KE 2-1800

SCALE 1"=40' | FOR: GREENFIELD CONST. CO. | DATE 6-15-70
SURVEY BY: BROWNS | ORDER NO. 4465

STATE OF MICHIGAN

IN THE CIRCUIT COURT FOR THE COUNTY OF WAYNE

IN THE MATTER OF THE COMPLAINT (PETITION) OF THE CITY OF LIVONIA, WAYNE COUNTY, MICHIGAN, TO CONDEMN PRIVATE PROPERTY FOR THE ACQUISITION OF CERTAIN PRIVATE PROPERTY IN ORDER TO OBTAIN LAND FOR PARK AND RECREATIONAL USE WITHIN ITS BOUNDARIES BETWEEN MERRIMAN ROAD ON THE EAST, FARMINGTON ROAD ON THE WEST, SEVEN MILE ROAD ON THE NORTH, AND SIX MILE ROAD ON THE SOUTH, AS A NECESSARY PUBLIC IMPROVEMENT FOR THE USE AND BENEFIT OF THE PUBLIC	Civil Action No. 142667

RECEIVED
SEP 21 1970
CITY OF LIVONIA
DEPT. OF LAW

VERDICT OF THE JURY

FILED
SULLIVAN, CLERK

HARRY C. TATIGIAN
City Attorney for the
City of Livonia
Attorney for Petitioner
GARY L. SACKETT
Assistant City Attorney for
the City of Livonia
33001 Five Mile Road
Livonia, Michigan 48154
421-2000 Ext. 226 & 227

When recorded, return to:
City of Livonia
33001 Five Mile Rd.
Livonia, Michigan 48154

F585813

1262 - 245

STATE OF MICHIGAN L17678 PA177

IN THE CIRCUIT COURT FOR THE COUNTY OF WAYNE

IN THE MATTER OF THE COMPLAINT (PETITION) OF THE CITY OF LIVONIA, WAYNE COUNTY, MICHIGAN, TO CONDEMN PRIVATE PROPERTY FOR THE ACQUISITION OF CERTAIN PRIVATE PROPERTY IN ORDER TO OBTAIN LAND FOR PARK AND RECREATIONAL USE WITHIN ITS BOUNDARIES BETWEEN MERRIMAN ROAD ON THE EAST, FARMINGTON ROAD ON THE WEST, SEVEN MILE ROAD ON THE NORTH, AND SIX MILE ROAD ON THE SOUTH, AS A NECESSARY PUBLIC IMPROVEMENT FOR THE USE AND BENEFIT OF THE PUBLIC	Civil Action No. 142667

F585813

RECORDED APR 13 1971 AT 9:36 A.M.
BERNARD J. YOUNGBLOOD, Register of Deeds
WAYNE COUNTY, MICHIGAN 48226

FILED
SEPT. 18, 1970
EDGAR M. BRAUGH, CLERK
BY M. SHERIDAN

VERDICT OF THE JURY

PART I

We find that it is A Necessity necessary to make the proposed acquisition of land, and that it is A Necessity necessary to take the fee simple title to the private property described in the petition in this cause for the use and benefit of the public for the proposed park and recreational site.

PART II

The just compensation to be paid for such private property we have ascertained and determined, and hereby award as follows:

1262-246

L17678 PA178

Description	Parties in Interest	Compensation
Parcel J-36		
That part of the N. E. 1/4 of Section 10, T. 1 S., R. 9 E., described as beginning at a point on the E. line of said section distant S. 0° 50' 15" E. 1488.91 feet from the N. E. corner of Section 10 and proceeding W. 1319.07 feet; thence S. 0° 42' E. 166.75 feet; thence N. 89° 39' E. 1319.35 feet to the E. line of Section 10; thence N. 0° 50' 15" W. along said line 158.71 feet to the point of beginning, except the E. 320.00 feet thereof.	(Paul Yoveff (and Olive (Yoveff, his (wife	$15000

1262-247

L 17678 PA 179

Description	Parties in Interest	Compensation
Parcel J-38		
That part of Section 10, T. 1 S., R. 9 E., City of Livonia, Wayne County, Michigan, described as the E. 1/2 of the N. 2/3 of the W. 1/2 of the N. E. 1/4 of Section 10.	(Dr. M. J. (Franjac and (Grace Franjac, (his wife	$ 3000

1262 - 248

L117678 PA180

SIGNATURES OF THE JURORS

1. S/
2. S/
3. S/
4. S/
5. S/
6. S/
7.
8.
9.
10.
11.

E-314-2 Bks.

CERTIFIED COPY—"LAW" L117678 PA181

No. A 382502

STATE OF MICHIGAN, County of Wayne } ss.

I, JOSEPH B. SULLIVAN ~~EDITH M. McBRAYER~~, Clerk of Wayne County, and Clerk of the Circuit Court for the County of Wayne, do hereby certify, that the above and the foregoing is a true and correct copy of VERDICT OF THE JURY #142667 entered in the above entitled cause by said Court, as appears of record in my office. That I have compared the same with the original, and it is a true transcript therefrom, and of the whole thereof.

In Testimony Whereof, I have hereunto set my hand and affixed the seal of said Court and County, at Detroit, this MAR 26 1971 day of _____ A. D. 19__

JOSEPH B. SULLIVAN ~~EDITH M. McBRAYER~~, Clerk

Fee, $ 25

D. Sims, Deputy Clerk

D. SIMS

Lawyers Title Insurance Corporation

A Stock Company

Home Office ~ Richmond, Virginia

CASE NO. D-165549

OWNER'S TITLE INSURANCE POLICY

AMOUNT

$--6,200.00--

EFFECTIVE DATE

July 21, 1970
at 8:00 A.M.

SCHEDULE A

NAME OF INSURED

CITY OF LIVONIA, a Michigan Municipal Corporation,

1. The estate or interest in the land described or referred to in this Schedule covered by this Policy is:
Fee Simple.

2. Title to the estate or interest covered by this Policy at the date hereof is vested in the Insured.

3. The land referred to in this Policy is described as follows:

Land in the City of Livonia, County of Wayne, State of Michigan, described as:

That part of Section 10, Town 1 South, Range 9 East, City of Livonia, Wayne County, Michigan, described as the West 72.7 feet of the North 1771 feet of the Northeast 1/4 of Section 10, except the North 530.73 feet thereof. 2.07 acres.

Countersigned:
DETROIT BRANCH OFFICE

Catherine Grant
Authorized Officer or Agent

Issued at: DETROIT, MICHIGAN

ORIGINAL Page 1—Sched. A—Policy No. T 461585

Lawyers Title Insurance Corporation

Home Office ~ Richmond, Virginia

OWNER'S TITLE INSURANCE POLICY

Case No. D-165549

SCHEDULE B

This Policy does not insure against loss or damage by reason of the following:

1. Rights or claims of parties in possession not shown of record.
2. Unrecorded water, mineral and oil rights, unrecorded easements and claims of easement, boundary line disputes not disclosed of record and any matters which would be disclosed by an accurate survey and inspection of the premises.
3. Mechanics' liens not of record.
4. The dower or homestead rights, if any, of the wife of any individual insured or of any individual shown herein to be a party in interest.
5. Building and use restrictions not appearing of record in the chain of title, but omitting those, if any, based on race, color, religion or national origin.
6. Rights of the public in that portion of captioned land used for road or highway purposes.

7-30-70-ra

ORIGINAL Page 1—Sched. B—Policy No. T 461585

Lawyers Title
6-30-70

DEPARTMENT OF LAW

JUN 8 '70 PM

CITY ATTORNEY
HARRY C. TATIGIAN
ASSISTANT CITY ATTORNEYS
ROBERT M. FEINBERG
GARY L. SACKETT

EDWARD H. MCNAMARA
MAYOR

RECEIVED
CITY OF LIVONIA
OFFICE OF THE CITY CLERK

33001 FIVE MILE ROAD
LIVONIA, MICHIGAN 48154
GARFIELD 1-2000

June 5, 1970

TO: ADDISON W. BACON, CITY CLERK

FROM: DEPARTMENT OF LAW

SUBJECT: PURCHASE OF PARK SITE PROPERTY IN SECTION 10 (RABINOVITCH) CR-380-70
City Park Site Designation J-41

Dear Sir:

The Council by resolution #380-70 authorized the Department of Law to purchase a portion of Parcel 10Q2 for use as a future park site. Pursuant to such authorization, the Department of Law finalized such purchase with the sellers thereof, Ralph D. Rabinovitch and Sara Dubo Rabinovitch, his wife, on June 2, 1970 in the Office of the City Attorney, and in this connection we are forwarding to you herewith the following documents:

1. Closing Statement;
2. Commitment for Title Insurance, #D-165549-F issued by Lawyers Title Insurance Corporation;
3. Order to Issue Owners' Policy; and
4. Statement in the amount of $65.00 from Lawyers Title to cover cost of the policy.

The Warranty Deed conveying the subject property to the City has been transmitted to the Council for acceptance.

We would appreciate it if you would please order the title insurance policy and pay the aforesaid statement (see closing statement).

Very truly yours,

Robert M. Feinberg, Asst. City Atty.

RMF:s
encs.
file

CLOSING STATEMENT

SELLERS: RALPH D. RABINOVITCH, M.D. and
SARA D. RABINOVITCH, his wife
32325 W. Seven Mile Rd., Livonia

PURCHASER: CITY OF LIVONIA, a Michigan Municipal Corp.
33001 Five Mile Road
Livonia, Michigan 48154

PROPERTY: BUREAU OF TAXATION PARCEL 10Q2
(City Park Site Designation J-41)

That part of Section 10, Town 1 South, Range 9 East, City of Livonia, Wayne County, Michigan described as the West 72.7 feet of the North 1771 feet of the Northeast 1/4 of Section 10, except the North 530.73 feet thereof. 2.07 acres

CREDITS TO SELLERS:

SALE PRICE	$6,200.00	
1969 taxes paid $543.83 pro rata 3/13/70 - 11/30/70 8 months, 19 days @ $45.32 per month	$390.30	$6,590.30

CREDITS TO PURCHASER:

Revenue stamps - $6200 @ $1.10 per thousand	$7.15	
Title insurance policy	$65.00	$72.15
NET CASH DUE SELLERS		$6,518.15

ACCEPTED

SELLERS: Ralph D. Rabinovitch
Sara D. Rabinovitch

PURCHASER: By [illegible]
Asst. City Attorney

Pursuant to council resolution #380-70 adopted by the City Council at its regular meeting held on May 11, 1970.

Dated: June 2, 1970

CUSTOMER NUMBER

COMMITMENT FOR TITLE INSURANCE 5/19/70 CH

D-165549-F

Lawyers Title Insurance Corporation

HOME OFFICE · RICHMOND, VIRGINIA
MICHIGAN STATE OFFICE
735 GRISWOLD STREET, DETROIT, MICHIGAN 48226

APPLICANT ADDRESS

RECEIVED
MAY 20 1970
CITY OF LIVONIA
DEPT. OF LAW

Lawyers Title Insurance Corporation, herein called the Company, hereby agrees to issue a policy of title insurance as hereinafter set forth upon satisfactory compliance with the requirements herein set forth.

The reverse side hereof is part of this commitment.

FORM OF POLICY TO BE ISSUED

A.L.T.A. OWNER'S POLICY	A.L.T.A. MORTGAGE POLICY WITHOUT EXCEPTIONS	MORTGAGE POLICY WITH EXCEPTIONS
$ 6,200.00	$	$

PARTY TO BE INSURED City of Livonia

Description Of Subject Land

Located In City of Livonia, Wayne County, Michigan

That part of Section 10, Town 1 South, Range 9 East, City of Livonia, Wayne County, Michigan described as the West 72.7 feet of the North 1771 feet of the Northeast 1/4 of Section 10, except the North 530.73 feet thereof. 2.07 acres.

Tax Item No. 10QZ

OWNER, ENCUMBRANCES, EXCEPTIONS TO TITLE, UNPAID TAXES, ASSESSMENTS AND REQUIREMENTS FOR ISSUANCE OF POLICY.

1. OWNER: Ralph D. Rabinovitch and Sara Dubo Rabinovitch, his wife.

REQUIREMENT: RECORD DEED FROM ABOVE OWNERS TO CITY OF LIVONIA, A MICHIGAN MUNICIPAL CORPORATION.

2. Mortgage for the sum of $8,000.00, exeucted by Ralph D. Rabinovitch and Sara Dubo Rabinovitch, his wife to Erna F. Ward dated August 10, 1961 and recorded August 11, 1961 in Liber 14543, on Page 473, Register No. C-147250 Wayne County Records.

REQUIREMENT: RECORD SATISFACTORY DISCHARGE OF THE ABOVE MORTGAGE OR SAME WILL BE SHOWN IN FINAL POLICY.

3. Rights of the public in that portion of captioned land used for road or highway purposes.

REQUIREMENT: NONE. ABOVE TO BE SHOWN IN FINAL POLICY.

4. County Tax: 1969 Paid $450.70

City Tax: 1969 Paid $93.13

FOR INFORMATION CALL W. G. Childers EXAMINER, PHONE 963-5810

This commitment is preliminary to the issuance of a policy of title insurance and shall not be binding until it shall have been countersigned by an Agent or Authorized Officer of the Company.

This commitment is valid and binding for a period of 90 days only from the effective date hereof.

In witness whereof, the Company has caused this commitment to be executed pursuant to its by-laws at Detroit, **Michigan effective as of** May 15, 1970 at 8:00 A.M.

Lawyers Title Insurance Corporation

Frederick A. Thomson
SENIOR VICE PRESIDENT

COUNTERSIGNED BY

J. P. Simmons
AGENT OR AUTHORIZED OFFICER

OVER

AUDIT NUMBER C 497012

CUSTOMER NUMBER COMMITMENT FOR TITLE INSURANCE 5/19/70 BL

Lawyers Title Insurance Corporation

HOME OFFICE-RICHMOND, VIRGINIA
MICHIGAN STATE OFFICE
735 GRISWOLD STREET, DETROIT, MICHIGAN 48226

APPLICANT AND ADDRESS

Lawyers Title Insurance Corporation, herein called the Company, hereby agrees to issue a policy of title insurance as hereinafter set forth upon satisfactory compliance with the requirements herein set forth.

The reverse side hereof is part of this commitment.

FORM OF POLICY TO BE ISSUED

A.L.T.A. OWNER'S POLICY	A.L.T.A. MORTGAGE POLICY WITHOUT EXCEPTIONS	MORTGAGE POLICY WITH EXCEPTIONS
$ 6,200.00	$	$

PARTY TO BE INSURED City of Livonia

Description Of Subject Land

Located In City of Livonia, Wayne County, Michigan

That part of Section 10, Town 1 South, Range 9 East, City of Livonia, Wayne County, Michigan described as the West 72.7 feet of the North 1771 feet of the Northeast 1/4 of Section 10, except the North 530.73 feet thereof. 2.07 acres.

Tax Item No. 10QZ

OWNER, ENCUMBRANCES, EXCEPTIONS TO TITLE, UNPAID TAXES, ASSESSMENTS AND REQUIREMENTS FOR ISSUANCE OF POLICY.

1. OWNER: Ralph D. Rabinovitch and Sara Dubo Rabinovitch, his wife.

REQUIREMENT: RECORD DEED FROM ABOVE OWNERS TO CITY OF LIVONIA, A MICHIGAN MUNICIPAL CORPORATION.

2. Mortgage for the sum of $8,000.00, executed by Ralph D. Rabinovitch and Sara Dubo Rabinovitch, his wife to Erna F. Ward dated August 10, 1961 and recorded August 11, 1961 in Liber 14543, on Page 473, Register No. C-147250 Wayne County Records.

REQUIREMENT: RECORD SATISFACTORY DISCHARGE OF THE ABOVE MORTGAGE OR SAME WILL BE SHOWN IN FINAL POLICY.

3. Rights of the public in the portion of captioned land used for road or highway purposes.

REQUIREMENT: NONE. ABOVE TO BE SHOWN IN FINAL POLICY.

4. County Tax: 1969 Paid $450.70

City Tax: 1969 Paid $93.13

FOR INFORMATION CALL W. G. Childers EXAMINER, PHONE 963-5810

This commitment is preliminary to the issuance of a policy of title insurance and shall not be binding until it shall have been countersigned by an Agent or Authorized Officer of the Company.

This commitment is valid and binding for a period of 90 days only from the effective date hereof. In witness whereof, the Company has caused this commitment to be executed pursuant to its by-laws at Detroit, Michigan effective as of May 15, 1970 at 8:00 A.M.

Lawyers Title Insurance Corporation

Frederick A. Thomson
SENIOR VICE PRESIDENT

COUNTERSIGNED BY

J. P. Simmons
AGENT OR AUTHORIZED OFFICER

AUDIT NUMBER C

OVER

(40

F506084

L 17406 PA 271

WARRANTY DEED

STATUTORY FORM

KNOW ALL MEN BY THESE PRESENTS: That

RALPH D. RABINOVITCH and SARA DUBO RABINOVITCH, his wife

whose address is* 32325 W. Seven Mile Road, Livonia, Michigan

Convey and Warrant to CITY OF LIVONIA, a Michigan Municipal Corporation

whose street number and postoffice address is 33001 W. Five Mile Road, Livonia, Michigan

the following described premises situated in the City of Livonia County of Wayne and State of Michigan, to-wit:

That part of Section 10, Town 1 South, Range 9 East, City of Livonia, Wayne County, Michigan, described as the West 72.7 feet of the North 1771 feet of the Northeast 1/4 of Section 10, except the North 530.73 feet thereof. 2.07 acres.

LEGAL DESCRIPTION APPROVED 6/4/70 R.B.O.H.

together with all and singular the tenements, hereditaments and appurtenances thereunto belonging or in anywise appertaining,

for the sum of Six Thousand Two Hundred ($6,200.00) Dollars

subject to restrictions and easements of record.

RECORDED JUL 13 1970 AT 10/14 O'CLOCK A.M.
BERNARD J. YOUNGBLOOD, Register of Deeds
WAYNE COUNTY, MICHIGAN 48226

Dated this 2nd day of June 1970

Signed in the presence of:

Gary L. Sackett

Robert M. Feinberg

Signed by:

RALPH D. RABINOVITCH

SARA DUBO RABINOVITCH

STATE OF MICHIGAN Dept. of Taxation REAL ESTATE TRANSFER TAX 07.15 P.O. 10552

STATE OF MICHIGAN
COUNTY OF Wayne } ss.

On this 2nd day of June 1970 before me personally appeared Ralph D. Rabinovitch and Sara Dubo Rabinovitch, his wife

to me known to be the person S described in and who executed the foregoing instrument and acknowledged that they executed the same as their free act and deed.

Gladys M. Hoener, Notary Public, Wayne County, Michigan

My Commission expires January 4 1972

County Treasurer's Certificate	City Treasurer's Certificate
This is to certify that there are no tax liens or titles on the property and that taxes are paid for FIVE YEARS previous to date of this instrument EXCEPT ..... No. 9056 JUL 13 1970 Wayne County Treasurer	

When recorded return to: City Clerk, 33001 Five Mile Road, Livonia, Michigan 48154

Recording Fee ..... Rev. Stamps 7.15

Drafted by:* C. R. Charest
Business address: 32437 Five Mile Road, Livonia, Michigan

*See note re P.A. 1963, No.150, on reverse side.

737566

F506084

MAKE YOUR REAL ESTATE TRANSFERS SAFE BY USING BURTON TITLE INSURANCE

BURTON ABSTRACT AND TITLE COMPANY . . . OPERATED CONTINUOUSLY SINCE 1868

51389036 0000950 1

C885403

LI 17216 PA 366 42

Lawyers Title Insurance Corporation

Form 616 4-65

DISCHARGE OF MORTGAGE

KNOW ALL MEN BY THESE PRESENTS, That a certain Indenture Mortgage

bearing date the Fifth day of April A. D. 1961, made and executed by Eddie Clemons of the first part to Arthur Cross

of the second part, and recorded in the Register's Office for the County of Wayne and State of Michigan in Liber 15074 of Mortgages, on Page 833 on the Tenth day of July A. D. 1963

is fully paid, satisfied and discharged.

IN WITNESS WHEREOF, I have hereunto set my hand and seal the 17th day of October A. D. 19 69

Signed, Sealed and Delivered in Presence of

James N. McNally III

David F. Dickinson

Celia Joan Marshall (L.S.)
Celia Joan Marshall, Executrix
Estate of Arthur Cross, Deceased
1304 Somerset, Grosse Pointe Park, Mich

(L.S.)

(L.S.)

RECORDED DEC 1 1969 AT 10 37 O'CLOCK A.M.
BERNARD J. YOUNGBLOOD, Register of Deeds
WAYNE COUNTY 26, MICHIGAN

(L.S.)

STATE OF MICHIGAN
COUNTY OF Wayne ss.

On this 17th day of October A. D. 19 69 before me, a Notary Public in and for said County, personally came the above named Celia Joan Marshall, Executrix of the Estate of Arthur Cross, Dec'd known to me to be the person named in and who executed the above instrument, and acknowledged that she executed the same for the intents and purposes therein mentioned.

David F. Dickinson

My commission expires March 6, 1973 Notary Public, Wayne County, Michigan

Instrument Drafted by James N. McNally III Business Address 2750 Guardian Building, Detroit Mich

When recorded return to:
City Clerk, 33001 Five Mile, Livonia, Mich.
Livonia City

726688

APPROVED AS TO FORM
DEPARTMENT OF LAW
BY
DATE 10-27-69

TRACTS — ESCROWS
TITLE INSURANCE — A
TITLE INSURANCE — ABSTRACTS — ESCROWS

C885403

Lawyers Title Insurance Corporation C885404

LI 17216 PA 367 43

Form 616 4-65

DISCHARGE OF MORTGAGE

KNOW ALL MEN BY THESE PRESENTS, That a certain Indenture Mortgage

bearing date the 28th day of December A. D. 1959, made and executed by Eddie Clemons of the first part to Arthur Cross

of the second part, and recorded in the Register's Office for the County of Wayne and State of Michigan in Liber 15074 of Mortgages, on Page 835 on the 10th day of July A. D. 19 63

is fully paid, satisfied and discharged.

IN WITNESS WHEREOF, I have hereunto set my hand and seal the 17th day of October A. D. 19 69

Signed, Sealed and Delivered in Presence of

James N. McNally III

David F. Dickinson

Celia Joan Marshall (L.S.)
Celia Joan Marshall, Executrix,
Estate of Arthur Cross, Deceased
1304 Somerset, Grosse Pointe Park Mich.

(L.S.)

RECORDED DEC 1 1969 AT 10 37 CLOCK a. (L.S.)
BERNARD J. YOUNGBLOOD, Register of Deeds
WAYNE COUNTY 26, MICHIGAN

(L.S.)

STATE OF MICHIGAN
COUNTY OF Wayne ss.

On this 17th day of October A. D. 19 69 before me, a Notary Public in and for said County, personally came the above named Celia Joan Marshall, Executrix of the Estate of Arthur Cross, Dec'd

known to me to be the person named in and who executed the above instrument, and acknowledged that she executed the same for the intents and purposes therein mentioned.

David F. Dickinson

My commission expires March 6, 1973 Notary Public, Wayne County, Michigan

Instrument Drafted by James N. McNally III, Atty Business Address 2750 Guardian Building, Detroit, Mich

When recorded return to:

City Clerk, 33001 Five Mile, Livonia, Mich.
Livonia City

APPROVED AS TO FORM
DEPARTMENT OF LAW
BY
DATE 10-27-69

726688

TITLE INSURANCE—ABSTRACTS—ESCROWS

C885404

TITLE INSURANCE—ABSTRACTS—ESCROWS

L 17215 PA 334 (71)

WARRANTY DEED—Statutory Form
Act 187 P.A. 1881 - M.S.A. 26.571

F-561 6-61

F447610

Abstract and Title Guaranty Division
of Lawyers Title Insurance Corporation
Wayne Oakland Macomb Midland Washtenaw

KNOW ALL MEN BY THESE PRESENTS: That Eddie Clemons, a single man
Tropical Park
Route 5, Box 391
Kissimmee, Florida 32741

Conveys and Warrants to

CITY OF LIVONIA, a Michigan Municipal Corporation

whose Street Number and Post Office address is 33001 Five Mile Road

the following described premises situated in the City of Livonia County of Wayne
and State of Michigan, to-wit:

That part of Section 10, Town 1 South, Range 9 East, City of Livonia, Wayne County, Michigan, described as the West 16 acres of the East 26 acres of the Northwest 1/4 of Section 10, except the North 530.73 feet thereof, 12.73 acres. (Tax Item No. 10T)

LEGAL DESCRIPTION APPROVED 10/27/69 OK

F447610

TITLE INSURANCE..ABSTRACTS..ESCROWS

together with all and singular the tenements, hereditaments and appurtenances thereunto belonging or in anywise appertaining

for the sum of Forty-four Thousand and Five Hundred Dollars and 00/100 ($44,500.00) One Dollar(s)
and other valuable considerations;

subject to

APPROVED AS TO FORM
DEPARTMENT OF LAW

RECORDED DEC 1 1969 AT 10:36 O'CLOCK A.M.
BERNARD J. YOUNGBLOOD, Register of Deeds
WAYNE COUNTY, MICHIGAN 48226

Dated this 24 day of October A. D. 19 69

Signed, Sealed and Delivered in Presence of:

Harry C. Tatigian

C.A. German Jr.

Signed and Sealed:

Eddie Clemons (L. S.)

STATE OF MICHIGAN REAL ESTATE TRANSFER TAX

(L. S.)

(L. S.)

(L. S.)

In the STATE OF MICHIGAN, COUNTY OF Wayne ss.

On this 24 day of October A. D. 19 69 before me personally appeared Eddie Clemons

to me known to be the person described in and who executed the foregoing instrument and acknowledged that he executed the same as his free act and deed.

My commission expires December 6, A. D. 1969

James R. Merz
Notary Public Wayne County, Michigan

County Treasurer's Certificate

This is to certify that there are no tax liens on this property and that taxes are paid for FIVE YEARS previous to date of this instrument EXCEPT 1966 tax 51.45 Paid
No. 1203
DEC 1 1969 WAYNE COUNTY TREASURER

City Treasurer's Certificate

Recording Fee
U. S. Revenue Stamps ~~48.50~~ 48.95 726688

When recorded return to City Clerk, 33001 Five Mile
Livonia, Michigan 48154

Drafted by: Harry C. Tatigian, City Attorney

TITLE INSURANCE..ABSTRACTS..ESCROWS

Lawyers Title Insurance Corporation

A Stock Company

Home Office ~ Richmond, Virginia

OWNER'S TITLE INSURANCE POLICY

SCHEDULE A

CASE NO. D-156207

AMOUNT

$ --44,500.00--

EFFECTIVE DATE

December 3, 1969

at 8:00 A.M.

NAME OF INSURED

CITY OF LIVONIA, a Michigan Municipal Corporation

1. The estate or interest in the land described or referred to in this Schedule covered by this Policy is:

Fee Simple.

2. Title to the estate or interest covered by this Policy at the date hereof is vested in the Insured.

3. The land referred to in this Policy is described as follows:

Land in the City of Livonia, County of Wayne, State of Michigan, described as:

That part of Section 10, Town 1 South, Range 9 East, City of Livonia, Wayne County, Michigan, described as the West 16 acres of the East 26 acres of the Northwest 1/4 of Section 10, except the North 530.73 feet thereof.

Countersigned:

DETROIT BRANCH OFFICE

Authorized Officer or Agent

Issued at: DETROIT, MICHIGAN

ORIGINAL Page 1—Sched. A—Policy No. T 452328

Lawyers Title Insurance Corporation

Home Office ~ Richmond, Virginia

Case No. D-156207

OWNER'S TITLE INSURANCE POLICY

SCHEDULE B

This Policy does not insure against loss or damage by reason of the following:

1. Rights or claims of parties in possession not shown of record.
2. Unrecorded water, mineral and oil rights, unrecorded easements and claims of easement, boundary line disputes not disclosed of record and any matters which would be disclosed by an accurate survey and inspection of the premises.
3. Mechanics' liens not of record.
4. The dower or homestead rights, if any, of the wife of any individual insured or of any individual shown herein to be a party in interest.
5. Building and use restrictions not appearing of record in the chain of title, but omitting those, if any, based on race, color, religion or national origin.

6. Rights of the public in that part of captioned land used for road purposes.

7. Sewer easement in favor of the Board of County Road Commissioners of the County of Wayne, Michigan, in the South 10 feet of the North 50 feet of captioned land as granted by instrument dated March 24, 1939 and recorded July 24, 1939 in Liber 5240, Page 286, Register No. C-360759.

8. 1969 County tax - Due
   1969 City tax - Due

12-18-69 hf

ORIGINAL Page 1—Sched. B—Policy No. T 452328

DEPARTMENT OF LAW

CITY ATTORNEY
HARRY C. TATIGIAN

ASSISTANT CITY ATTORNEYS
ALBERT W. EASTON
GARY L. SACKETT

33001 FIVE MILE ROAD
LIVONIA, MICHIGAN 48154
GARFIELD 1-2000

HARVEY W. MOELKE
MAYOR

October 27, 1969

Lawyers title
11-6

TO: ADDISON W. BACON
CITY CLERK

FROM: DEPARTMENT OF LAW

SUBJECT: PARK SITE PROPERTY IN SECTION 10 (EDDIE CLEMONS)

REF: Council Resolution 789-69
Park Site Designation "J-43"

OCT 27 '69 PM

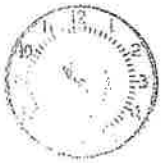

CITY OF LIVONIA
OFFICE OF THE CITY CLERK

Dear Mr. Bacon:

The Council by resolution #789-69 authorized the Department of Law to purchase Taxation Parcel 10T for use as a future park site. Pursuant to such authorization, the Department of Law finalized such purchase with the owner thereof, Eddie Clemons on October 24, 1969 at the Livonia National Bank. In this connection we are forwarding to you herewith the following documents:

1. Closing Statement;
2. Commitment for Title Insurance, No. D-156207-F issued by Lawyers Title Insurance Corporation;
3. Order to Issue Owners' Policy; and
4. Statement in the amount of $255.00 from Lawyers Title to cover cost of the policy.

The Warranty Deed and Discharge of Mortgage documents, conveying the subject property to the City, have been transmitted to the Council for acceptance.

We would appreciate it if you would order the title insurance policy and pay the aforesaid statement which has been authorized in the aforesaid council resolution.

TO: ADDISON W. BACON
CITY CLERK

October 27, 1969
Page 2

REF: Council Resolution 789-69
Park Site Designation "J-43"
Eddie Clemons

Thank you.

Very truly yours,

Harry C. Tatigian, City Attorney

HCT:z

Enclosures

CLOSING STATEMENT

SELLER: Eddie Clemons
Tropical Park
Route 5, Box 391
Kissimmee, Florida 32741

PURCHASER: CITY OF LIVONIA, a Michigan municipal corporation
33001 Five Mile Road
Livonia, Michigan 48154

PROPERTY: Taxation Parcel 10T said portion being more particularly described as:

That part of Section 10, T. 1 S., R. 9 E., City of Livonia, Wayne County, Michigan, described as the W. 16 acres of the E. 26 acres of the N. W. 1/4 of Section 10, except the N. 530.73 feet thereof. (12.73 acres)

City Park Site Designation "J-43"

SALES PRICE	$44,500.00	
proration of taxes as of 6-12-69	571.46	
		$45,071.46
LESS		
cost of title insurance	255.00	
revenue stamps	49.50	
	304.50	
NET CASH DUE SELLERS		$44,766.96

ACCEPTED: SELLER PURCHASER

Eddie Clemons
Eddie Clemons

CITY OF LIVONIA, a
Michigan municipal corporation

By Harry C. Tolgian
Harry C. Tolgian, City Attorney

Dated: 10/24/69

Pursuant to council resolution #789-69
adopted at the regular meeting of
the Council held on

CUSTOMER NUMBER

D-156207-F

Lawyers Title Insurance Corporation

HOME OFFICE - RICHMOND, VIRGINIA
MICHIGAN STATE OFFICE
735 GRISWOLD STREET, DETROIT, MICHIGAN 48226

APPLICANT ADDRESS

RECEIVED
AUG 14 1969
CITY OF LIVONIA
DEPT. OF LAW

Lawyers Title Insurance Corporation, herein called the Company, hereby agrees to issue a policy of title insurance as hereinafter set forth upon satisfactory compliance with the requirements herein set forth.

The reverse side hereof is part of this commitment.

FORM OF POLICY TO BE ISSUED

A.L.T.A. OWNER'S POLICY	A.L.T.A. MORTGAGE POLICY WITHOUT EXCEPTIONS	MORTGAGE POLICY WITH EXCEPTIONS
$ 44,500.00	$	$

PARTY TO BE INSURED City of Livonia

Description Of Subject Land

Located In City of Livonia, Wayne County, Michigan

That part of Section 10, Town 1 South, Range 9 East, City of Livonia, Wayne County, Michigan, described as the West 16 acres of the East 26 acres of the Northwest 1/4 of Section 10, except the North 530.73 feet thereof, 12.73 acres.

Tax Item No. 10T

OWNER, ENCUMBRANCES, EXCEPTIONS TO TITLE, UNPAID TAXES, ASSESSMENTS AND REQUIREMENTS FOR ISSUANCE OF POLICY.

1. OWNER: Eddie Clemens

REQUIREMENT: RECORD DEED FROM ABOVE OWNER AND WIFE IF MARRIED TO CITY OF LIVONIA, A MICHIGAN MUNICIPAL CORPORATION.

2. Mortgage for the sum of $11,100.00, executed by Eddie Clemons, a single man, to Arthur Cross, dated April 5, 1961 and recorded July 10, 1963 in Liber 15074, Page 833, Register No.C-289267, Wayne County Records. See Item No.5.

REQUIREMENT: RECORD SATISFACTORY DISCHARGE OF THE ABOVE MORTGAGE OR SAME TO BE SHOWN ON FINAL POLICY.

3. Mortgage for the sum of $22,000.00, to be executed by Eddie Clemons, a single man, to Arthur Cross dated December 28, 1959 and recorded July 10, 1963 in Liber 15074, Page 835, Register No.C-289268, Wayne County Records. See Item No.5.

REQUIREMENT: RECORD SATISFACTORY DISCHARGE OF THE ABOVE MORTGAGE.

(CONTINUED ON ATTACHED RIDER)

FOR INFORMATION CALL W.G.Childers EXAMINER, PHONE 963-5810

This commitment is preliminary to the issuance of a policy of title insurance and shall not be binding until it shall have been countersigned by an Agent or Authorized Officer of the Company.

This commitment is valid and binding for a period of 90 days only from the effective date hereof. In witness whereof, the Company has caused this commitment to be executed pursuant to its by-laws at Detroit, **Michigan effective as of** August 7, 1969 at 8:00A.M.

Lawyers Title Insurance Corporation

Frederick A. Thomson
SENIOR VICE PRESIDENT

COUNTERSIGNED BY

AGENT OR AUTHORIZED OFFICER

AUDIT NUMBER C 454226

OVER

COMMITMENT RIDER

This rider is attached to and made a part of Commitment bearing Case # D-156207-F

4. Rights of the public in that part of captioned land used for road purposes.

REQUIREMENT: NONE. ABOVE TO BE SHOWN ON FINAL POLICY.

5. Proceedings in the Estate of Arthur Cross, deceased, whose Estate is being Probated in the Wayne County Probate File #536969. Celia Joan Marshall was appointed executrix and qualified as such fudiciary October 1, 1964. The inventory recites Mortgagee's interest in captioned land. The estate is still pending.

REQUIREMENT: RECORD DISCHARGES OF MORTGAGES SHOWN IN ITEMS #2 AND #3 EXECUTED BY SAID EXECUTRIX.

6. Sewer easement in favor of the Board of County Road Commissioners of the County of Wayne, Michigan, in the South 10 feet of the North 50 feet of captioned land as granted by instrument dated March 24, 1939 and recorded July 24, 1939 in Liber 5240, Page 286, Register No.C-360759.

REQUIREMENT: NONE. ABOVE TO BE SHOWN ON FINAL POLICY.

7. County Tax: 1968 Paid $1,544.11
City Tax: 1968 Paid $282.59

Lawyers Title Insurance Corporation

Frederick A. Thomas
SENIOR VICE PRESIDENT

COUNTERSIGNED BY

AGENT OR AUTHORIZED OFFICER

Lawyers Title Insurance Corporation

A Stock Company

Home Office ~ Richmond, Virginia

CASE NO. D-155096

OWNER'S TITLE INSURANCE POLICY

EFFECTIVE DATE

October 8, 1969
at 10:57 A.M.

AMOUNT

$--629,200.00--

SCHEDULE A

NAME OF INSURED

CITY OF LIVONIA, A Michigan Municipal Corporation,

1. The estate or interest in the land described or referred to in this Schedule covered by this Policy is:

Fee Simple.

2. Title to the estate or interest covered by this Policy at the date hereof is vested in the Insured.

3. The land referred to in this Policy is described as follows:

Land in the City of Livonia, County of Wayne, State of Michigan, described as:

PARCEL I: The South 1/3 of West 1/2 of Northeast 1/4 of Section 10, Town 1 South, Range 9 East, containing 26.74 acres, more or less.

PARCEL II: The West 1/2 of Southeast 1/4 of Section 10, Town 1 South, Range 9 East, except South 60 feet thereof, containing 77.98 acres, more or less.

Countersigned:
DETROIT BRANCH OFFICE

Marie Maynard
Authorized Officer or Agent

Issued at: DETROIT, MICHIGAN

ORIGINAL Page 1—Sched. A—Policy No. T 451144

STATE OF MICHIGAN

IN THE CIRCUIT COURT FOR THE COUNTY OF WAYNE

IN THE MATTER OF THE COMPLAINT (PETITION) OF THE CITY OF LIVONIA, WAYNE COUNTY, MICHIGAN, TO CONDEMN PRIVATE PROPERTY FOR THE ACQUISITION OF CERTAIN PRIVATE PROPERTY IN ORDER TO OBTAIN LAND FOR PARK AND RECREATIONAL USE WITHIN ITS BOUNDARIES BETWEEN MERRIMAN ROAD ON THE EAST, FARMINGTON ROAD ON THE WEST, SEVEN MILE ROAD ON THE NORTH, AND SIX MILE ROAD ON THE SOUTH, AS A NECESSARY PUBLIC IMPROVEMENT FOR THE USE AND BENEFIT OF THE PUBLIC	Civil Action No. 142667

Judgment

VERDICT OF THE COURT

FILED

JOSEPH D. SULLIVAN, CLERK

BY _____

HARRY C. TATIGIAN
City Attorney for the
City of Livonia
Attorney for Petitioner
GARY L. SACKETT
Assistant City Attorney for
the City of Livonia
33001 Five Mile Road
Livonia, Michigan 48154
421-2900, Ext. 226 & 227

When recorded, return to:
City of Livonia, 33001 F
Livonia, Michigan 4815

F585814 1262-144

L 17678 PA 182

STATE OF MICHIGAN

IN THE CIRCUIT COURT FOR THE COUNTY OF WAYNE

IN THE MATTER OF THE COMPLAINT (PETITION) OF THE CITY OF LIVONIA, WAYNE COUNTY, MICHIGAN, TO CONDEMN PRIVATE PROPERTY FOR THE ACQUISITION OF CERTAIN PRIVATE PROPERTY IN ORDER TO OBTAIN LAND FOR PARK AND RECREATIONAL USE WITHIN ITS BOUNDARIES BETWEEN MERRIMAN ROAD ON THE EAST, FARMINGTON ROAD ON THE WEST, SEVEN MILE ROAD ON THE NORTH, AND SIX MILE ROAD ON THE SOUTH, AS A NECESSARY PUBLIC IMPROVEMENT FOR THE USE AND BENEFIT OF THE PUBLIC	Civil Action No. 142667

ENTERED

F585814

VERDICT OF THE COURT

PARCEL NO. J-37

FILED SEPT. 28, 1970 EDGAR M. BERWIGW, CLERK BY M. SHERIDAN

PART I

RECORDED APR 13 1971 AT 9:26 A.M. BERNARD J. YOUNGBLOOD, Register of Deeds WAYNE COUNTY, MICHIGAN 48226

The Court finds that it is necessary to make the proposed acquisition of land, and that it is necessary to take the fee simple title to the private property described in the petition in this cause for the use and benefit of the public for the proposed park and recreational site.

PART II

The just compensation to be paid for such private property is ascertained and determined, and hereby awarded as follows:

1262-1555

L17678 PA183

Description	Parties in Interest	Compensation
Parcel J-37		
That part of Section 10 T. 1 S., R. 9 E., City of Livonia, Wayne County, Michigan, described as the S. 10 acres of the N. 60 acres of the E. 1/2 of the N. E. 1/4 of Section 10, T. 1 S., R. 9 E., except the E. 320.00 feet thereof.	(William N. (Edmonds and (Mary Ellen (Edmonds, his (wife	$ 23,500.00

1262-1946

STATE OF MICHIGAN 117678 PA184

IN THE CIRCUIT COURT FOR THE COUNTY OF WAYNE

IN THE MATTER OF THE COMPLAINT (PETITION) OF THE CITY OF LIVONIA, WAYNE COUNTY, MICHIGAN, TO CONDEMN PRIVATE PROPERTY FOR THE ACQUISITION OF CERTAIN PRIVATE PROPERTY IN ORDER TO OBTAIN LAND FOR PARK AND RECREATIONAL USE WITHIN ITS BOUNDARIES BETWEEN MERRIMAN ROAD ON THE EAST, FARMINGTON ROAD ON THE WEST, SEVEN MILE ROAD ON THE NORTH, AND SIX MILE ROAD ON THE SOUTH, AS A NECESSARY PUBLIC IMPROVEMENT FOR THE USE AND BENEFIT OF THE PUBLIC	Civil Action No. 142667

Judgment

At a session of said Court held on SEP 28 1970, the _____ day of September, 1970.

PRESENT: HON. James Montante
Circuit Judge

WHEREAS, ~~the respective parties above named~~ William N. Edwards & Mary Ellen Edwards, his wife, being the owners of the parcel of property described, and the Petitioner in these proceedings have agreed to submit this matter to the Court for its determination;

NOW THEREFORE, it is ordered that the Petitioner pay to the ~~respective~~ above respondents the amount of money above indicated for such parcel and all title and interest in this property does hereby vest in the Petitioner.

/S/ JAMES MONTANTE
Circuit Judge

A TRUE COPY
EDGAR M. BRANIGIN
CLERK
BY _____ Deputy Clerk

No. A 382503

STATE OF MICHIGAN, County of Wayne } ss.

E-314-2 Bks.

JOSEPH B. SULLIVAN

CERTIFIED COPY--"LAW" L17678 PA185

I, [redacted], Clerk of Wayne County, and Clerk of the Circuit Court for the County of Wayne, do hereby certify, that the above and the foregoing is a true and correct copy of VERDICT + JUDGMENT OF THE COURT #142667

entered in the above entitled cause by said Court, as appears of record in my office. That I have compared the same with the original, and it is a true transcript therefrom, and of the whole thereof.

In Testimony Whereof, I have hereunto set my hand and affixed the seal of said Court and County, at Detroit, this MAR 26 1971 day of, A. D. 19

JOSEPH B. SULLIVAN [redacted], Clerk

Fee, $ .25

D. SIMS, Deputy Clerk

D. SIMS

Lawyers Title Insurance Corporation

Home Office ~ Richmond, Virginia

CASE NO. D-153642

AMOUNT

$ --47,000.00--

OWNER'S TITLE INSURANCE POLICY

SCHEDULE A

EFFECTIVE DATE

July 31, 1969
at 8:00 A.M.

NAME OF INSURED

CITY OF LIVONIA, a Michigan Municipal Corporation

1. The estate or interest in the land described or referred to in this Schedule covered by this Policy is:

Fee Simple.

2. Title to the estate or interest covered by this Policy at the date hereof is vested in the Insured.

3. The land referred to in this Policy is described as follows:

Land in the City of Livonia, County of Wayne, State of Michigan, described as:

That part of the West 1/2 of the Northeast 1/4 of Section 10 described as beginning at a point on the North line of said Section distant East, 243.90 feet from the North 1/4 corner of Section 10 and proceeding thence South parallel with the North and South line of said Section, 1,771.0 feet; thence East, 430.40 feet; thence North parallel with the North and South line of said Section 1,771.0 feet to the North line of Section 10; thence West along said line, 430.40 feet to the point of beginning, except the North 533 feet of the West 134.9 feet thereof.

Countersigned:

Authorized Officer or Agent

Issued at: Detroit, Michigan

ORIGINAL

Page 1—Sched. A—Policy No. V 563890

Lawyers Title Insurance Corporation

Home Office ~ Richmond, Virginia

Case No. D-153642

OWNER'S TITLE INSURANCE POLICY

SCHEDULE B

This Policy does not insure against loss or damage by reason of the following:

1. Rights or claims of parties in possession not shown of record.
2. Unrecorded water, mineral and oil rights, unrecorded easements and claims of easement, boundary line disputes not disclosed of record and any matters which would be disclosed by an accurate survey and inspection of the premises.
3. Mechanics' liens not of record.
4. The dower or homestead rights, if any, of the wife of any individual insured or of any individual shown herein to be a party in interest.

5. Easement in favor of the Board of County Road Commissioners of the County of Wayne for the purpose of installing and maintaining water lines in the South 10 feet of the North 50 feet of captioned land, as granted in Easement dated August 7, 1939 and recorded September 15, 1939 in Liber 5271, Page 214, Register No. C-370540.

6. Rights of the public in that part of captioned land used for road purposes.

8-11-69 hf

Policy 72—Mich. Rev. 10-66 50M—Litho in U.S.A.

ORIGINAL

American Land Title Association Owner's Policy—Standard Form B—1962

DEPARTMENT OF LAW

CITY ATTORNEY
HARRY C. TATIGIAN
ASSISTANT CITY ATTORNEYS
ALBERT W. EASTON
GARY L. SACKETT

HARVEY W. MOELKE
MAYOR

June 26, 1969

33001 FIVE MILE ROAD
LIVONIA, MICHIGAN 48154
GARFIELD 1-2000

TO: ADDISON W. BACON, CITY CLERK

FROM: DEPARTMENT OF LAW

SUBJECT: PARK SITE PROPERTY IN SECTION 10 (WILLMAN)

REF: CR-472-69 (CITY PARK SITE DESIGNATION J-39)

Dear Sir:

The Council by resolution #472-69 authorized the Department of Law to purchase a portion of Parcel 10P for use as a future park site. Pursuant to such authorization, the Department of Law finalized such purchase with the owners thereof, Walter Otto Willman and Florence Louise Willman, his wife on June 24, 1969 in the Office of the City Attorney. In this connection we are forwarding to you herewith the following documents:

1. Closing Statement;
2. Commitment for Title Insurance, No. D-153642-F issued by Lawyers Title Insurance Corporation;
3. Order to Issue Owner's Policy;
4. Statement in the amount of $265.00 from Lawyers Title to cover cost of the policy.

The Warranty Deed, conveying the subject property to the City, has been transmitted to the Council for acceptance.

We would appreciate it if you would please order the title insurance policy and pay the aforesaid statement which has been authorized in the aforesaid council resolution.

Very truly yours,

Harry C. Tatigian, City Attorney

HCT:z
Enclosures (4)

CLOSING STATEMENT

SELLER: Walter Otto Willman and Florence Louise Willman, his wife
32285 West Seven Mile Road
Livonia, Michigan

PURCHASER City of Livonia, a Michigan municipal corporation
33001 Five Mile Road
Livonia, Michigan 48154

PROPERTY: A portion of Taxation Parcel 10P, said portion being more particularly described as:

That part of the West 1/2 of the Northeast 1/4 of Section 10 described as beginning at a point on the North line of said section distant East, 243.90 feet from the North 1/4 corner of Section 10 and proceeding thence South parallel with the North and South line of said section, 1771.0 feet; thence East, 430.40 feet; thence North parallel with the North and South line of said section, 1771.0 feet to the North line of Section 10; thence West along said line, 430.40 feet to the point of beginning except the North 533 feet of the West 134.9 feet thereof.

City Park Site Designation "J-39"

SALES PRICE	$47,000.00	
proration of taxes as of April 1, 1969	892.12	
	+	
	$47,892.12	
LESS revenue stamps	- 51.70	
NET CASH DUE SELLERS		$47,840.42

ACCEPTED: SELLERS

Walter Otto Willman

Florence Louise Willman

Dated: 6-24-69

PURCHASER

CITY OF LIVONIA, a Michigan municipal corporation

BY Harry C. Tatigian

Harry C. Tatigian, City Attorney

Pursuant to council resolution #472-69 adopted at the regular meeting of the Council held on April 30, 1969.

CUSTOMER NUMBER

COMMITMENT FOR TITLE INSURANCE 6/11/69 cc

CASE NUMBER D-153642-F

Lawyers Title Insurance Corporation

HOME OFFICE · RICHMOND, VIRGINIA
MICHIGAN STATE OFFICE
735 GRISWOLD STREET · DETROIT · MICHIGAN 48226

APPLICANT ADDR.

Lawyers Title Insurance Corporation, herein called the Company, hereby agrees to issue a policy of title insurance as hereinafter set forth upon satisfactory compliance with the requirements herein set forth.

The reverse side hereof is part of this commitment.

FORM OF POLICY TO BE ISSUED

A.L.T.A. OWNER'S POLICY	A.L.T.A. MORTGAGE POLICY WITHOUT EXCEPTIONS	MORTGAGE POLICY WITH EXCEPTIONS
$ 47,000.00	$	$

PARTY TO BE INSURED City of Livonia

Description Of Subject Land

Located In City of Livonia, Wayne County, Michigan

That part of the West 1/2 of the Northeast 1/4 of Section 10 described as beginning at a point on the North line of said section distant East, 243.90 feet from the North 1/4 corner of Section 10 and proceeding thence South parallel with the North and South line of said section, 1,771.0 feet; thence East, 430.40 feet; thence North parallel with the North and South line of said section, 1,771.0 feet to the North line of Section 10; thence West along said line, 430.40 feet to the point of beginning except the North 533 feet of the West 134.9 feet thereof.

Tax Item No.10P

OWNER, ENCUMBRANCES, EXCEPTIONS TO TITLE, UNPAID TAXES, ASSESSMENTS AND REQUIREMENTS FOR ISSUANCE OF POLICY.

1. OWNER: Walter Otto Willman and Florence Lovice Willman, his wife, an undivided 1/2 interest and Walter Otto Willman, an undivided 1/2 interest.

REQUIREMENT: RECORD DEED FROM ABOVE OWNERS, TO CITY OF LIVONIA, A MICHIGAN MUNICIPAL CORPORATION.

2. Easement in favor of the Board of County Road Commissioners of the County of Wayne for the purpose of installing and maintaining water lines in the South 10 feet of the North 50 feet of captioned land, as granted in easement dated August 7,1939 and recorded in Liber 5271, Page 214, Register No.C-370540.

REQUIREMENT: NONE. ABOVE TO BE SHOWN IN FINAL POLICY.

3. County Tax: 1968 Paid

City Tax: 1968 Paid

FOR INFORMATION CALL P.J. Egan EXAMINER, PHONE 963-5810

This commitment is preliminary to the issuance of a policy of title insurance and shall not be binding until it shall have been countersigned by an Agent or Authorized Officer of the Company.

This commitment is valid and binding for a period of 90 days only from the effective date hereof.

In witness whereof, the Company has caused this commitment to be executed pursuant to its by-laws

at Detroit, **Michigan effective as of** June 5,1969 at 8:00 A.M.

Lawyers Title Insurance Corporation

Frederick A. Thomas
SENIOR VICE PRESIDENT

COUNTERSIGNED BY

AGENT OR AUTHORIZED OFFICER

AUDIT NUMBER C441316

OVER

F431304 LI 17159 PA 557

No. 97,299

DEED OF REAL ESTATE AT PRIVATE SALE—Laws of 1896 3026N

Know All Men by these Presents: That I, THOMAS TATA, administrator of the Estate of Luisa Tata, also known as Louisa Tata and Louisa A. Tata, Deceased,

pursuant to an order of the Judge of Probate for the County of OAKLAND and State of Michigan, made at a session of said Probate Court, held at the Probate Office in the CITY PONTIAC, in said County and State, on the 3rd day of July 19 69, authorizing, empowering and licensing me, the said administrator

to sell and dispose of in conformity to the Statute in such case made and provided, so much of the real estate, whereof the said deceased died seized, for the purpose as in said order mentioned, did sell and dispose of, at private sale, all the estate, right, title and interest of said deceased in and to a certain real estate and premises, in said order set forth, and hereinafter described, to City of Livonia, a Michigan municipal corporation,

which said sale was, by an order made by the said Judge of Probate, on the 28th day of July, 19 69, duly approved and confirmed, and I, the said administrator

was directed and empowered to execute and deliver a proper conveyance of said real estate so sold and disposed of at private sale to said City of Livonia,

the purchaser thereof, agreeable to the Statute in such case made and provided.

Now, Therefore, Know Ye, That I, Thomas Tata, said administrator, by virtue and in pursuance of the said several orders and decrees above referred to, and in consideration of the sum of Thirteen Thousand Five Hundred and 00/100 ($13,500.00) Dollars, paid to me the said administrator, by the said City of Livonia,

the receipt whereof is hereby acknowledged, I have sold and disposed of, and do hereby grant, sell, and convey unto the said CITY OF LIVONIA, a Michigan municipal corporation, whose address is 33001 Five Mile Road, Livonia, Michigan 48154,

~~heirs~~ and assigns, forever, all the estate, right, title and interest of the said deceased

in and to the following described lands, to-wit:

The E. 16 acres of the W. 34 acres of the E. 60 acres of the NW 1/4 of Section 10, Town 1 South, Range 9 East, City of Livonia, Wayne County, Michigan, except the W. 82.50 feet of the N. 1320 feet thereof; also except the S. 983.70 feet; also except the N. 533 feet thereof.

RECORDED OCT 3 1969 AT 10:03 O'CLOCK A.M.
BERNARD J. YOUNGBLOOD, Register of Deeds
WAYNE COUNTY, MICHIGAN 48226

WAYNE COUNTY 0 3 6 4 7 STATE OF MICHIGAN Department of Treasury Taxation REAL ESTATE TRANSFER TAX PR 10679

Rec 14.85

722109

F431304

APPROVED AS TO FORM
DEPARTMENT OF LAW
BY [signature]
DATE 8-21-69

When Recorded Return to Grantee

Together, with all and singular the tenements, hereditaments and appurtenances thereunto belonging or in anywise appertaining.

In Witness Whereof, I have hereunto set my hand and seal the 21st day of AUGUST 19 69

In Presence of:

[signature] ALBERT P. HERZOG

[signature] JOYCE M. McDONALD

[signature] (L. S.)

Thomas Tata (L. S.)

23241 Prospect
Farmington, MI 48024 (L. S.)

(L. S.)

STATE OF MICHIGAN, } ss.
COUNTY OF OAKLAND } On this 21st day of AUGUST 19 69, before me appeared Thomas Tata to me personally known, who, being by me duly sworn, did say that he is, the administrator of the estate of Luisa Tata, aka Louisa Tata & Louisa A. Tata, Deceased, and that as such he executed the foregoing deed by virtue and in pursuance of the orders and decrees of the Probate Court for the County of OAKLAND acknowledged that he executed the same for the intents and purposes therein mentioned.

[signature]

My Commission Expires 19 Notary Public OAKLAND County, Michigan

VIOLET J. ROBERTSON
Notary Public, Wayne County, Mich.
Acting in Oakland County
My Commission Expires Dec. 3, 1972

*PRINT, TYPEWRITE OR STAMP names of persons executing this instrument, also names of witnesses and Notary Public immediately underneath such Signatures.

Instrument drafted by:
Albert P. Herzog
23290 Farmington Road, Farmington, MI 48024. Telephone 474-0015

Return

Deed of Real Estate
SOLD AT PRIVATE SALE

By of -TO-

REGISTER'S OFFICE
COUNTY OF OAKLAND ss.
Received for Record the day of 19 o'clock M., and Recorded in Liber of Deeds, on Page
Register of Deeds.

Lawyers Title Insurance Corporation

A Stock Company

Home Office ~ Richmond, Virginia

CASE NO. D-154008

OWNER'S TITLE INSURANCE POLICY

AMOUNT

$--13,500.00--

SCHEDULE A

EFFECTIVE DATE

October 7, 1969

at 8:00 A.M.

NAME OF INSURED

CITY OF LIVONIA, a Michigan Municipal Corporation

1. The estate or interest in the land described or referred to in this Schedule covered by this Policy is:

Fee Simple.

2. Title to the estate or interest covered by this Policy at the date hereof is vested in the Insured.

3. The land referred to in this Policy is described as follows:

Land in the City of Livonia, County of Wayne, State of Michigan, described as:

Part of Section 10, Town 1 South, Range 9 East, City of Livonia, Wayne County, Michigan, described as: The East 16 acres of the West 34 acres of the East 60 acres of the Northwest 1/4 of Section 10, except the West 82.5 feet of the North 1320.0 feet thereof; also except the South 983.70 feet; also except the North 533 feet thereof of the East 77 feet thereof.

Countersigned:

DETROIT BRANCH OFFICE

Catherine Grant

Authorized Officer or Agent

Issued at: DETROIT, MICHIGAN

ORIGINAL Page 1—Sched. A—Policy No. T 449936

Lawyers Title Insurance Corporation

Home Office ~ Richmond, Virginia Case No. D-154008

OWNER'S TITLE INSURANCE POLICY

SCHEDULE B

This Policy does not insure against loss or damage by reason of the following:

1. Rights or claims of parties in possession not shown of record.
2. Unrecorded water, mineral and oil rights, unrecorded easements and claims of easement, boundary line disputes not disclosed of record and any matters which would be disclosed by an accurate survey and inspection of the premises.
3. Mechanics' liens not of record.
4. The dower or homestead rights, if any, of the wife of any individual insured or of any individual shown herein to be a party in interest.
5. Building and use restrictions not appearing of record in the chain of title.

6. Easement for water lines to Board of Wayne County Road Commissioners in a ten foot strip of land, the centerline of which is 45 feet South of and parallel to the centerline of 7 Mile Road, recorded in Liber 5240, Page 280, Register No. C-360760.

7. Rights of the public in that portion of the captioned land being used as a public street or highway. (Seven Mile Road)

10/20/69 od

ORIGINAL Page 1—Sched. B—Policy No. T 449936

Tatagpro file 9-24-69

DEPARTMENT OF LAW

CITY ATTORNEY
HARRY C. TATIGIAN

ASSISTANT CITY ATTORNEYS
ALBERT W. EASTON
GARY L. SACKETT

HARVEY W. MOELKE
MAYOR

September 3, 1969

33001 FIVE MILE ROAD
LIVONIA, MICHIGAN 48154
GARFIELD 1-2000

TO: ADDISON W. BACON
CITY CLERK

FROM: DEPARTMENT OF LAW

SUBJECT: PARK SITE PROPERTY IN SECTION 10
(THOMAS TATA, ADMINISTRATOR OF
ESTATE OF LUISA TATA, DECEASED)

REF: 618-69 and 874-69 and 875-69

Dear Sir:

The Council by resolution #618-69 authorized the Department of Law to purchase a portion of Parcel 10U1b1 for use as a future park site. Pursuant to such authorization, the Department of Law finalized such purchase with the owners thereof, Tata, et al. on July 25, 1969 in the Office of the City Attorney. In this connection we are forwarding to you herewith the following documents:

1. Closing Statement;
2. Commitment for Title Insurance, No. D-154008-F issued by Lawyers Title Insurance Corporation; Delivered
3. Order to Issue Owner's Policy; and
4. Statement in the amount of $100.00 from Lawyers Title to cover cost of the policy.

The Quit Claim Deed and the Deed of Real Estate At Private Sale conveying the subject property has been transmitted to the Council for acceptance.

TO: ADDISON W. BACON

September 3, 1969
Page 2

SUBJECT: PARK SITE "J-44"
TATA, ET AL.

REF: 618-69 and 875-69

We would appreciate it if you would please order the title insurance policy and pay the aforesaid statement (authorized in CR-618-69).

Thank you.

Very truly yours,

Harry C. Tatigian, City Attorney

HCT:z

Enclosures - See page 1 for List.

CLOSING STATEMENT

NAME: THOMAS TATA, ADMINISTRATOR
OF ESTATE OF LUISA TATA,
DECEASED
23241 Prospect
Farmington, Michigan

BUYER: CITY OF LIVONIA
33001 Five Mile Road
Livonia, Michigan 48154

PROPERTY: Taxation Parcel 10U1b1
Said portion being more particularly described as:

The E. 16 acres of the W. 34 acres of the E. 60 acres of the N. W. 1/4 of Section 10, Town 1 South, Range 9 East, City of Livonia, Wayne County, Michigan, except the W. 82.50 feet of the No. 1320 feet thereof; also except the S. 983.70 feet; also except the N. 533 feet thereof.

SALES PRICE:

	$13,500.00	
proration of taxes 5-12-69	341.85	
		$13,841.85
LESS		
cost of title insurance		100.00
revenue stamps		15.40
NET CASH DUE SELLERS		$13,726.45

ACCEPTED: SELLER PURCHASER

by Albert J. Glazer
his attorney

CITY OF LIVONIA, a Michigan municipal corporation

By Harry C. Tatigian
Harry C. Tatigian, City Attorney

Pursuant to council resolution #618-69 adopted at the regular meeting of the Council held on June 11, 1969; and pursuant to council resolution # 875-69 adopted at the regular meeting of the Council held on August 6, 1969.

D-154008-F

Lawyers Title Insurance Corporation

HOME OFFICE - RICHMOND, VIRGINIA
MICHIGAN STATE OFFICE
735 GRISWOLD STREET, DETROIT, MICHIGAN 48226

APPLICANT AND ADDRESS

Lawyers Title Insurance Corporation, herein called the Company, hereby agrees to issue a policy of title insurance as hereinafter set forth upon satisfactory compliance with the requirements herein set forth.

The reverse side hereof is part of this commitment.

FORM OF POLICY TO BE ISSUED

A.L.T.A. OWNER'S POLICY	A.L.T.A. MORTGAGE POLICY WITHOUT EXCEPTIONS	MORTGAGE POLICY WITH EXCEPTIONS
$ 13,500.00	$	$

PARTY TO BE INSURED City of Livonia,

Description Of Subject Land

Located In City of Livonia, Wayne County, Michigan

That part of Section 10, Town 1 South, Range 9 East, City of Livonia, Wayne County, Michigan, described as: the East 16 acres of the West 34 acres of the East 60 acres of the Northwest ¼ of Section 10, except the West 82.5 feet of the North 1320.0 feet thereof; also except the South 983.70 feet; also except the North 533 feet thereof, or of the East 77 feet thereof.

Tax Item No. 10U1b1

OWNER, ENCUMBRANCES, EXCEPTIONS TO TITLE, UNPAID TAXES, ASSESSMENTS AND REQUIREMENTS FOR ISSUANCE OF POLICY.

1. OWNER: Louisa Tata

REQUIREMENT: RECORD DEED FROM ABOVE OWNER TO CITY OF LIVONIA, A MICHIGAN MUNICIPAL CORPORATION.

2. Easement for water lines to Board of Wayne County Road Commissioners in a ten foot strip of land, the centerline of which is 45 feet South of and parallel to the centerline of 7 Mile, recorded in Liber 5240, Page 280, Register No. C-360760.

REQUIREMENT: NONE. ABOVE TO BE SHOWN IN FINAL POLICY.

3. Right of the public in that portion of the captioned land being used as a public street or highway. (Seven Mile Road)

REQUIREMENT: NONE. ABOVE TO BE SHOWN ON FINAL POLICY.

(SEE ATTACHED RIDER)

FOR INFORMATION CALL R.S. Olivier EXAMINER, PHONE 963-5810

This commitment is preliminary to the issuance of a policy of title insurance and shall not be binding until it shall have been countersigned by an Agent or Authorized Officer of the Company.

This commitment is valid and binding for a period of 90 days only from the effective date hereof. In witness whereof, the Company has caused this commitment to be executed pursuant to its by-laws at Detroit, **Michigan effective as of** June 13, 1969 at 8:00AM

Lawyers Title Insurance Corporation

Frederick A. Thomas
SENIOR VICE PRESIDENT

COUNTERSIGNED BY

Daniel De Grave
AGENT OR AUTHORIZED OFFICER

OVER

AUDIT NUMBER C441494

COMMITMENT RIDER

This rider is attached to and made a part of Commitment bearing Case # D-154008-F

4. Interest of Serafino Tata, Vincent Tata, Thomas Tata, and Frances A. Skaisgin, as tenants in common to each an undivided $\frac{1}{4}$ interest, grantees of James W. Smelser and Beulah S. Smelser, his wife, in quit claim deed dated February 20, 1969 and recorded in Liber 16942, Page 416, Register No. F-365643. James W. Smelser and Beulah S. Smelser, his wife, were grantees of Gilbert H. Bachofen, a single man, in quit claim deed recorded in Liber 13724, Page 722, Register No. E-357243. Both of said deeds cover that portion of captioned land described as: Beginning at a point 1320 feet on a line bearing South 0 degrees 5 minutes 20 seconds West from the North line of Section 10 and 617 feet measured North 89 degrees 56 minutes 40 seconds West along said section line from the North quarter corner post of Section 10; thence South 0 degrees 5 minutes 20 seconds West 190.8 feet; thence North 89 degrees 56 minutes 40 seconds North 82.5 feet; thence North 0 degrees 5 minutes 20 seconds East 190.8 feet; thence South 89 degrees 56 minutes 40 seconds East 82.5 feet to the point of beginning, containing 0.361 acres, more or less.

REQUIREMENT: RECORD DEED FROM ABOVE PARTIES TO PARTY TO BE INSURED.

5. County Tax 1968 - Paid

City Tax 1968 - Paid

Lawyers Title Insurance Corporation

Frederick A. Thomson
SENIOR VICE PRESIDENT

COUNTERSIGNED BY

Daniel De Grove
AGENT OR AUTHORIZED OFFICER

CUSTOMER NUMBER

COMMITMENT FOR TITLE INSURANCE 1/15/69 pm

D-155096-F

Lawyers Title Insurance Corporation

HOME OFFICE - RICHMOND, VIRGINIA
MICHIGAN STATE OFFICE
735 GRISWOLD STREET, DETROIT, MICHIGAN 48226

APPLICANT'S ADDRESS

Lawyers Title Insurance Corporation, herein called the Company, hereby agrees to issue a policy of title insurance as hereinafter set forth upon satisfactory compliance with the requirements herein set forth.

The reverse side hereof is part of this commitment.

FORM OF POLICY TO BE ISSUED

A.L.T.A. OWNER'S POLICY	A.L.T.A. MORTGAGE POLICY WITHOUT EXCEPTIONS	MORTGAGE POLICY WITH EXCEPTIONS
$ 629,200.00	$	$

PARTY TO BE INSURED City of Livonia

Description Of Subject Land

Located in City of Livonia Wayne County, Michigan

PARCEL I: The South 1/3 of West 1/2 of Northeast 1/4 of Section 10, Town 1 South, Range 9 East, Containing 26.74 acres, more or less.

PARCEL II: West 1/2 of Southeast 1/4 of Section 10, Town 1 South, Range 9 East, except South 60 feet thereof. Containing 77.98 acres, more or less.

Tax Item No. 10R - Parcel 1
10KK1 - Parcel 2

Estate of Adolph Slatkin, deceased, an undivided 1/3 interest
Estate of Milton L. Slatkin, deceased an undivided 1/3 interest

OWNER, ENCUMBRANCES, EXCEPTIONS TO TITLE, UNPAID TAXES, ASSESSMENTS AND REQUIREMENTS FOR ~~ISSUANCE OF~~ POLICY.

1. OWNER: Harry Slatkin Builders, Inc., a Michigan Corporation undivided 1/3 interest

REQUIREMENT: RECORD DEED FROM ABOVE OWNER TO CITY OF LIVONIA, A MICHIGAN MUNICIPAL CORPORATION.

~~2. Notice of Claim filed by the Estate of Adolph Slatkin, deceased under contract dated August 15, 1968 as shareholder whose interest is being redeemed, as set forth in Liber 16800, Page 791, Register No. F-328605.~~

~~REQUIREMENT: RECORD SATISFACTORY RELEASE OF THIS CLAIM.~~

~~3. Rights of the public in that portion of the captioned land being used as a public street, or highway.~~

~~REQUIREMENT: NONE. ABOVE TO BE SHOWN ON FINAL POLICY.~~

(SEE ATTACHED RIDER)

FOR INFORMATION CALL R. S. Olivier **EXAMINER, PHONE** 963-5810

This commitment is preliminary to the issuance of a policy of title insurance and shall not be binding until it shall have been countersigned by an Agent or Authorized Officer of the Company.

This commitment is valid and binding for a period of 90 days only from the effective date hereof. In witness whereof, the Company has caused this commitment to be executed pursuant to its by-laws

at Detroit **Michigan effective as of** July ~~16~~, 1969 at 8:00 A.M.

COUNTERSIGNED BY

Lawyers Title Insurance Corporation

Frederick A. Thomson
SENIOR VICE PRESIDENT

AGENT OR AUTHORIZED OFFICER

AUDIT NUMBER C 450938

OVER

COMMITMENT RIDER

This rider is attached to and made a part of Commitment bearing Case # D-155096-F

4. County Tax: 1968 Unpaid ($2,550.26, not including interest and penalties, as to Parcel 1)
1968 Unpaid ($7,655.41, not including interest and penalties, as to Parcel 2)

City Tax: 1968 Unpaid ($411.82, not including interest and penalties, as to Parcel 1)
1968 Unpaid ($1,401.02, not including interest and penalties, as to Parcel 2)

REQUIREMENT: PAYMENT OF ABOVE TAXES AND/OR ASSESSMENTS, OR SAME TO BE SHOWN ON FINAL POLICY.

Lawyers Title Insurance Corporation

Frederick A. Thomas
SENIOR VICE PRESIDENT

COUNTERSIGNED BY

AGENT OR AUTHORIZED OFFICER

Lawyers Title Insurance Corporation

SETTLEMENT STATEMENT SALE OF PROPERTY

Estate of Milton Slatkin and
Estate of Adolph Slatkin and — July 30th, 19 69

SELLER Harry Slatkin Builders, Inc. — ADDRESS 20811 West 8 Mile Rd. Detroit, Mich.

PURCHASER City of Livonia, A Michigan Municipal Corporation — ADDRESS 33001 Five Mile Rd. Livonia, Mich.

PROPERTY ADDRESS Parcels 10R and 10KK1, Section 10, City of Livonia, Michigan

104 Acres, more or less, See Lawyers Title Commitment No. D-155096-F for Legal description.

CREDITS TO SELLER

SALE PRICE $629,200.00

TAXES:

19 68 CITY ~~XXXXXXXXXX~~ 10R $2,662.08 4 mos. @ $976.5425 per month Pro Rata $ 3,906.17

19 68 COUNTY, School Drain 10KK1 $9,056.43 Aug. Sept. Oct. Nov. Pro Rata $ -0-

Total $11,718.51 Inc. 1969 Pro Rata $ -0-

INSURANCE: (Pro-Ratio on due date basis only)

FIRE $ Exp. Prem. $ Pro Rata $ -0-

WINDSTORM $ Exp. Prem. $ Pro Rata $ -0-

EXT. COVERAGE $ Exp. Prem. $ Pro Rata $ -0-

MISCELLANEOUS:

* City, County, School Drain, etc. net to be paid by the Sellers through $ -0-

Lawyers Title Insurance Corp. Including Interest and Penalty due at closing $ -0-

$633,106.17

CREDITS TO PURCHASER

CASH DEPOSIT $ -0-

WATER BILLS PAID TO Amount $ Pro Rata $ -0-

RENTS:

TENANT PAID TO Amount $ Pro Rata $ -0-

TENANT PAID TO Amount $ Pro Rata $ -0-

TRANSFER TAX ON DEED $ -0-

SELLER'S TITLE & RECORDING EXPENSE $ -0-

MISCELLANEOUS:

See below for Revenue Stamps cost to be paid by $ -0-

Lawyers Title Insurance Corp. for Sellers at closing $ -0-

$ -0- $ -0-

$633,106.17

EXISTING LIEN TO BE PAID

(MORTGAGE) (LAND CONTRACT) Principal $ -0-

INTEREST FROM TO $ -0-

Total $ -0-

ESCROW BALANCE — Check payable to Lawyers Title Insurance Corp. Escrow, agent for the Sellers — Less $ -0- $ -0-

NET CASH DUE SELLER $633,106.17

SETTLEMENT STATEMENT BETWEEN BROKER AND SELLER

COMMISSION ON SALE See letter dated $7/1/1969

Lawyers No. D-155096-F

~~XXXXXXXXXXXXXXX~~ TITLE POLICY $ 1,905.00

Revenue Stamps $ 693.00

for the amount of $630,000.00

~~XXXXXX~~ $

The above expenses to be $ $

paid by Lawyers Title Insurance $

Corp.

F 591

SETTLEMENT ACCEPTED AS RENDERED:

Estate of Milton Slatkin by Harold Doppel
SIGNATURE-SELLER

Harry Slatkin's Builders Inc By David Dem
SIGNATURE-SELLER

Estate of Adolph Slatkin by [illegible]
SIGNATURE-PURCHASER

City of Livonia By [illegible]
SIGNATURE-PURCHASER

Acres Development Co. BROKER

ADDRESS 36888 Van Born Rd. Wayne, Mich.

PHONE NO. PA 8-4300

Closing by Kenneth R. Warren

July 29,. 1969

Received from the Department of Law City of Livonia, Check No. 2248, dated July 29, 1969 in the amount of $633,106.17 as full and complete payment for property purchased by the City, Parcels 10R and 10KK1 from Harry Slatkin Builders, Inc. for a future park site pursuant to Council Resolution No. 773-69; said check 2248 made payable to Lawyers Title Insurance Corporation as Escrow Agent for the Sellers.

1968 City & County taxes to be paid as of above date.

CRAIG H. HUSBAND
LAWYERS TITLE.

HCT:z

Dated: July 29, 1969

P1550 96 F432578 LIBER 17104 PAGE 151 37

Lawyers Title Insurance Corporation

Form 563 1-68
WARRANTY DEED—CORPORATION—Statutory Form
C.L. 1948, 565.151 M.S.A. 26.571

KNOW ALL MEN BY THESE PRESENTS: That HARRY SLATKIN BUILDERS, INC., a Michigan corporation,
whose address is 20811 West Eight Mile Road, Detroit, Michigan 48219

Conveys and Warrants to CITY OF LIVONIA, a Michigan municipal corporation,

whose address is 33001 Five Mile Road, Livonia, Michigan,
an undivided one-third (1/3) interest in and to each of
the following described premises situated in the City of Livonia
County of Wayne and State of Michigan, to-wit:

F432578

LEGAL DESCRIPTION APPROVED 9/1/69

PARCEL I: West 1/2 of the Southeast 1/4 of Section 10, except the South 60 feet thereof, Town 1 South, Range 9 East (77.98 acres more or less).

10K1K1

PARCEL II: South 1/3 of the West 1/2 of the Northeast 1/4 of Section 10, Town 1 South, Range 9 East (26.74 acres more or less)

10R

APPROVED AS TO FORM
DEPARTMENT OF LAW
BY
DATE: 7-3-69

together with all and singular the tenements, hereditaments and appurtenances thereunto belonging or in anywise appertaining,
for the full consideration of Two Hundred Nine Thousand Seven Hundred Thirty-Three and 33/100 ($209,733.33) Dollars
subject to

STATE OF MICHIGAN REAL ESTATE TRANSFER TAX
Dept. of Taxation
PD 1968

Dated this 24th day of July A. D. 1969

Witnesses:

M. Sinclair

Rose Gallo Taylor

Signed and Sealed:
HARRY SLATKIN BUILDERS, INC.,
a Michigan corporation (L.S.)

By Joseph B. Slatkin
Its President

By Irvin Hermanoff
Its Secretary

STATE OF MICHIGAN
COUNTY OF Wayne } ss.

On this 24th day of July A. D. 19 69 before me personally appeared Joseph B Slatkin and Irvin Hermanoff

to me personally known, who being by me sworn, did (1) each for himself say that (2) they are the President and Secretary of HARRY SLATKIN BUILDERS, INC.

the corporation named in and which executed the within instrument, and that the seal affixed to said instrument is the corporate seal of said corporation, and that said instrument was signed and sealed in behalf of said corporation by authority of its board of directors; and said Joseph B. Slatkin and Irvin Hermanoff acknowledged said instrument to be the free act and deed of said corporation.

ALICE K. KREMKOW
Notary Public Wayne County, Mich.
My Commission Expires Jan. 24, 1972

My commission expires

Alice K. Kremkow
Notary Public Wayne County, Michigan

Note: If more than one officer acknowledges insert at (1) "each for himself," and (2) "they are respectively"

Instrument Drafted by David L. Denn
Business Address 900 Michigan Building, Detroit, Michigan 48226.

County Treasurer's Certificate
This is to certify that there are no tax liens or titles on the property in this deed or are paid for FIVE YEARS previous to date of this instrument EXCEPT
No. 1376-7
OCT 8 1969
Clerk

City Treasurer's Certificate
RECORDED OCT 8 1969 AT 10 57 O'CLOCK A.M.
BERNARD J. YOUNGBLOOD, Register of Deeds
WAYNE COUNTY, MICHIGAN 48226

Recording Fee 722083
State Revenue Stamps $231.00

When recorded return to

TITLE INSURANCE — ABSTRACTS — ESCROWS

L-12076

L 17164 PG 208

QUIT CLAIM DEED

STATUTORY FORM

F432589

KNOW ALL MEN BY THESE PRESENTS: That ESTATE OF MILTON L. SLATKIN, DECEASED

whose address is* 1990 First National Building, Detroit, Michigan 48226

Quit Claim S to CITY OF LIVONIA, a Michigan municipal corporation

whose street number and postoffice address is 33001 Five Mile Road, Livonia, Michigan

an undivided one-third (1/3) interest in

the following described premises situated in the City of Livonia County of Wayne

and State of Michigan, to-wit:

F432589

LEGAL DESCRIPTION APPROVED 8/1/69

PARCEL I: West 1/2 of the Southeast 1/4 of Section 10, except the South 60 feet thereof, Town 1 South, Range 9 East (77.98 acres more or less).

PARCEL II: South 1/3 of the West 1/2 of the Northeast 1/4 of Section 10, Town 1 South, Range 9 East (26.74 acres more or less)

WAYNE COUNTY 9 3 7 9 9 STATE OF MICHIGAN Dept. of Taxation REAL ESTATE TRANSFER TAX 0 2 1 0 0 BY DATE

APPROVED AS TO FORM DEPARTMENT OF LAW 7-31-69

together with all and singular the tenements, hereditaments and appurtenances thereunto belonging or in anywise appertaining,

for the sum of Two Hundred Nine Thousand Seven Hundred Thirty-Three and 33/100 Dollars ($209,733.33)

RECORDED OCT 8 1969 AT 10 55 O'CLOCK A.M.
BERNARD J. YOUNGBLOOD, Register of Deeds
WAYNE COUNTY, MICHIGAN 48226

Dated this 28th day of July, 19 69.

Signed in the presence of:

Jerome S. Fanger

Jerome S. Fanger

Margaret A. O'Meara

Margaret A. O'Meara

Signed by:

ESTATE OF MILTON L. SLATKIN, DECEASED

By: Maxine Ferne Pearlman
Maxine Ferne Pearlman, Executrix

And: Joseph Pearlman
Joseph Pearlman, Administrator With Will Annexed

And: Jacob L. Keidan
Jacob L. Keidan, Administrator With Will Annexed

STATE OF MICHIGAN
COUNTY OF WAYNE } ss.

On this 28th day of July, 19 69, before me personally appeared Maxine Ferne Pearlman, Joseph Pearlman and Jacob L. Keidan, Executrix and Administrators with will annexed, respectively, of the Estate of Milton L. Slatkin, Deceased,

to me known to be the person S described in and who executed the foregoing instrument and acknowledged that they executed the same as the free act and deed of said Estate.

Margaret A. O'Meara
Margaret A. O'Meara, Notary Public, County, Michigan

My Commission expires Jan. 25 19 70

When recorded return to: Grantee

Recording Fee
Rev. Stamps 231.00

Drafted by:* Jerome S. Fanger
Business address: 1990 First National Building, Detroit, Michigan 48226

*See note re P.A. 1963, No.150, on reverse side.

722083

BURTON ABSTRACT AND TITLE COMPANY HAS OPERATED CONTINUOUSLY SINCE 1888

MAKE YOUR REAL ESTATE TRANSFERS SAFE BY USING BURTON TITLE INSURANCE

P-185 [illegible]

(41

QUIT CLAIM DEED

STATUTORY FORM

F432594

L17164 PA 215

KNOW ALL MEN BY THESE PRESENTS: That THE ESTATE ADOLPH SLATKIN, DECEASED

whose address is* 1056 Penobscot Building, Detroit, Michigan

Quit Claim s to CITY OF LIVONIA, a Michigan municipal corporation

whose street number and postoffice address is Livonia, Michigan

the following described premises situated in the City of Livonia County of Wayne and State of Michigan, to-wit:

F432594

LEGAL DESCRIPTION APPROVED 8/1/69

PARCEL I: West 1/2 of the Southeast 1/4 of Section 10, except the South 60 feet thereof, Town 1 South Range 9 East (77.98 acres more or less).

PARCEL II: South 1/3 of the West 1/2 of the Northeast 1/4 of Section 10, Town 1 South, Range 9 East (26.74 acres more or less)

WAYNE COUNTY 33800

STATE OF MICHIGAN Dept. of Taxation

REAL ESTATE TRANSFER TAX 231.00

APPROVED AS TO FORM DEPARTMENT OF LAW BY [signature] DATE 7-31-69

together with all and singular the tenements, hereditaments and appurtenances thereunto belonging or in anywise appertaining,

for the sum of Two Hundred Nine Thousand Seven Hundred Thirty-Three and 33/100 ($209,733.33) Dollars

RECORDED OCT 8 1969 AT 10 8 O'CLOCK AM
BERNARD J. YOUNGBLOOD, Register of Deeds
WAYNE COUNTY, MICHIGAN 48226

Dated this 30th day of July 19 69

Signed in the presence of:

Doris J. Bishop

Lorraine Merlo

Signed by:

ESTATE OF ADOLPH SLATKIN, DECEASED

Esther Slatkin

Robert Slatkin

Norman L. Lippitt

Administrators C/T/A

STATE OF MICHIGAN } ss.
COUNTY OF Wayne

On this 30th day of July 19 69 before me personally appeared Esther Slatkin, Robert Slatkin and Norman L. Lippitt, Administrators C/T/A of the Estate of Adolph Slatkin, Deceased to me known to be the person s described in and who executed the foregoing instrument and acknowledged that they executed the same as their free act and deed.

Doris J. Bishop, Notary Public, Wayne County, Michigan

My Commission expires March 10 1970

When recorded return to: Grantee

Recording Fee _____ Rev. Stamps 231.00

*See note re P.A. 1963, No.150, on reverse side.

Drafted by:* Roger Boesky
Business address: 1056 Penobscot Building
Detroit, Michigan 48226
965-5111

722083

BURTON ABSTRACT AND TITLE COMPANY ... OPERATED CONTINUOUSLY SINCE 1866

MAKE YOUR REAL ESTATE TRANSFERS SAFE BY USING BURTON TITLE INSURANCE

F409394

1052a

L17088 PA592

WARRANTY DEED

STATUTORY FORM

KNOW ALL MEN BY THESE PRESENTS: That Edna Kremkow

whose address is* 23211 Cass Avenue
Farmington, Michigan

LEGAL DESCRIPTION APPROVED 6/19/69

Conveys and Warrants to City of Livonia

whose street number and postoffice address is 33001 Five Mile Road

the following described premises situated in the City of Livonia County of Wayne and State of Michigan, to-wit:

That part of Section 10, T. 1 S., R. 9 E., City of Livonia, Wayne County, Michigan, described as the E. 10 acres of the N. W. 1/4 of Section 10, except the N. 530.73 feet thereof; also except the S. 43 feet thereof. (7.93 acres)

Parcel #10S2

together with all and singular the tenements, hereditaments and appurtenances thereunto belonging or in anywise appertaining,

for the sum of Twenty-seven Thousand Dollars and no/100 cents ($27,000.00)

subject to

APPROVED AS TO FORM
DEPARTMENT OF LAW
BY Harry C. Tatigian
DATE 6-25-69

STATE OF MICHIGAN REAL ESTATE TRANSFER TAX 29.70
Dept. of Treasury Taxation
WAYNE COUNTY 1 2 5

Dated this 25th day of June 19 69

Signed in the presence of:

Harry C. Tatigian

George F. Kwetcher

Signed by:

Edna Kremkow

23211 Cass Avenue

Farmington, Michigan

RECORDED JUL 24 1969 AT 9:16 O'CLOCK A.M.
BERNARD J. YOUNGBLOOD, Register of Deeds
WAYNE COUNTY, MICHIGAN 48226

STATE OF MICHIGAN
COUNTY OF Wayne } ss.

On this 25th day of June 19 69 before me personally appeared Edna Kremkow to me known to be the person described in and who executed the foregoing instrument and acknowledged that she executed the same as her free act and deed.

Gladys M. Hoener
Notary Public, Wayne County, Michigan

My Commission expires January 4 19 72

County Treasurer's Certificate	City Treasurer's Certificate
I do hereby certify that there are no tax liens or titles on this property and that taxes are paid for FIVE YEARS previous to date of this instrument 19 69	
No. 6549 Louis H. Kruk	
JUL 24 1969 WAYNE COUNTY TREASURER	

When recorded return to:
Office of the City Clerk
33001 Five Mile Road
Livonia, Michigan 48154

Recording Fee
Rev. Stamps 29.70

*See note re P.A. 1963, No.150, on reverse side.

Drafted by:* Harry C. Tatigian, City Atty.
Business address: 33001 Five Mile Road
Livonia, Michigan 48154

717393

BURTON ABSTRACT AND TITLE COMPANY ... OPERATED CONTINUOUSLY SINCE 1886

MAKE YOUR REAL ESTATE TRANSFERS SAFE BY USING BURTON TITLE INSURANCE

F409394

F409834

L17091 PA182

CERTIFICATE OF DEATH

MICHIGAN DEPARTMENT OF PUBLIC HEALTH
Vital Records Section

78395

State File No.

Local File No. 438

1. PLACE OF DEATH — County: Oakland
(If outside corporate limits, write RURAL and also township): Farmington Twp.
Name of (If not in hospital or institution, give street address or location): Botsford General

2. USUAL RESIDENCE (Where deceased lived. If institution: residence before admission.)
a. State: Michigan
b. County: Oakland
c. Township, City or Village: Farmington
d. Is Residence within limits of a city or incorporated village? Yes ☐ No ☐
e. Street Address (If rural, give location): 23211 Cass

3. Decedent's Name: a. (First) Walter b. (Middle) H. c. (Last) Kremkow
4. Date of Death: (Month) July (Day) 4 (Year) 1966
5. Sex: (Male or Female)
6. Color or Race: White
7. Married, Never Married, Widowed, Divorced (Specify): Married
8. Date of Birth: Oct. 2, 1900
9. Age (In years last birthday): 65
If under 1 year: Months / Days
If under 24 hrs.: Hours / Mins.
10a. Usual Occupation (Give kind of work during most of working life, even if retired): Engineer
10b. Kind of Business or Industry: Kelsey-Hayes
11. Birthplace (State or foreign country): Detroit, Michigan
12. Citizen of What Country? USA
13. Father's Name: Rick Kremkow
14. Mother's Maiden Name: Schilawske
15. Name of Husband or Wife of Deceased: Edna Kremkow
16. Was Deceased Ever in U.S. Armed Forces? (If yes, give war or dates of service)
17. Social Security No.: 365-01-6928
18. Informant's Name: Edna Kremkow
Address: 23211 Cass Farmington, Mich.

19. Cause of Death — Medical Certification
This does not mean the mode of dying, such as heart failure, asphyxia, etc. It means the disease, injury or condition which caused death.
I. Disease or Condition Directly Leading to Death* (a) Myocardial Infarction — Interval Between Onset and Death: Minutes
Antecedent Causes
Morbid conditions, if any, giving due to (b) Coronary artery Disease — years
rise to the above causes (a) stating the underlying cause last.
Due to (c) Other Factors
II. Other Significant Conditions
Conditions contributing to the death but not related to the disease or condition causing death.

RECORDED JUL 25 1969 AT 2:31 O'CLOCK PM
BERNARD J. YOUNGBLOOD, Register of Deeds
WAYNE COUNTY, MICHIGAN 48226

19a. Site of Operation
19b. Major Findings of Operation
20. Autopsy? Yes ☐ No ☒
21. Accident / Suicide / Homicide (Specify)
21b. Place of Injury (e.g., in or about home, farm, factory, street, office bldg., etc.)
21c. (City, Village, or Township) (County) (State)
21d. Time of Injury (Month) (Day) (Year) (Hour) m.
21e. Injury Occurred: While at Work ☐ Not While at Work ☐
21f. How Did Injury Occur?

I hereby certify that I attended the deceased from DOA 19__, to 19__, that I last saw the deceased alive on 19__, and that death occurred at 10:55 AM m., from the causes and on the date stated above.

22a. Signature: Donald Robinson M.D. Dept Med Exam
(Degree or Title)
23b. Address: Farmington
23c. Date Signed: 7-5-66

24a. Burial, Cremation, Removal (Specify)
24b. Date: July 28 1966
24c. Name of Cemetery or Crematory: Glen Eden
24d. Location (City, village, twp., or county) (State): Livonia, Michigan
Rec'd by Local Reg.: JUL 8 1966
Registrar's Signature: Jean P. Weir
25. Funeral Director's Signature: Ross B. Northrop & Son
Address: 22401 G. R. Det.

STATE OF MICHIGAN } SS
COUNTY OF OAKLAND }

I, John D. Murphy, County Clerk for the County of Oakland, Clerk of the Circuit Court thereof, the same being a court of Record, and having a Seal, do hereby certify that the foregoing is a copy of the record now remaining in my office.

In testimony whereof, I have hereunto set my hand and affixed the Seal of said Court this 8th day of November, 19 67

JOHN D. MURPHY, Clerk-Register of Deeds.

By Jean P. Weir
Deputy Clerk

917369

Lawyers Title Insurance Corporation

Home Office ~ Richmond, Virginia

CASE NO. D-153248

AMOUNT

$--27,000.00--

OWNER'S TITLE INSURANCE POLICY

SCHEDULE A

EFFECTIVE DATE

August 5, 1969
at 8:00 A.M.

NAME OF INSURED

CITY OF LIVONIA, a Michigan Corporation

1. The estate or interest in the land described or referred to in this Schedule covered by this Policy is:
   Fee Simple.

2. Title to the estate or interest covered by this Policy at the date hereof is vested in the Insured.

3. The land referred to in this Policy is described as follows:

   Land in the City of Livonia, County of Wayne, State of Michigan, described as:

   Part of Section 10, Town 1 South, Range 9 East, City of Livonia, Wayne County, Michigan, described as: The East 10 acres of the Northwest 1/4 of Section 10, except the North 530.73 feet thereof; also except the South 43 feet thereof.

Countersigned:

Issued at: Detroit, Michigan

Authorized Officer or Agent

ORIGINAL

Page 1—Sched. A—Policy No. V 563986

DEPARTMENT OF LAW

CITY ATTORNEY
HARRY C. TATIGIAN
ASSISTANT CITY ATTORNEYS
ALBERT W. EASTON
GARY L. SACKETT

HARVEY W. MOELKE
MAYOR

June 26, 1969

33001 FIVE MILE ROAD
LIVONIA, MICHIGAN 48154
GARFIELD 1-2000

TO: ADDISON W. BACON
CITY CLERK

FROM: DEPARTMENT OF LAW

SUBJECT: PARK SITE PROPERTY IN SECTION 10 (KREMKOW)

REF: CR-555-69 (CITY PARK SITE DESIGNATION J-42)

Dear Sir:

The Council by resolution #555-69 authorized the Department of Law to purchase Parcel 10S2 for use as a future park site. Pursuant to such authorization, the Department of Law finalized such purchase with the owners thereof, Edna Kremkow on June 25, 1969 in the Office of the City Attorney. In this connection we are forwarding to you herewith the following documents:

1. Closing Statement;

2. Commitment for Title Insurance No. D-153248-F issued by Lawyers Title Insurance Corporation;

Lawyers Title
7-22-69

3. Order to Issue Owner's Policy;

4. Statement in the amount of $165.00 from Lawyers Title to cover cost of the policy.

5. Certified copy of death certificate is enclosed and Lawyers Title should be advised as to same as far as issuance of the title policy.

The Warranty Deed, conveying the subject property to the City, has been transmitted to the Council for acceptance.

We would appreciate it if you would please order the title insurance policy and pay the aforesaid statement which has been authorized in the aforesaid council resolution.

Very truly yours,

Harry C. Tatigian, City Attorney

HCT:z
Enclosures (5)

CLOSING STATEMENT

SELLER: Edna Kremkow
23211 Cass Avenue
Farmington, Michigan

PURCHASER: City of Livonia, a Michigan municipal corporation
33001 Five Mile Road
Livonia, Michigan

PROPERTY: A portion of Taxation Parcel 10S2, said portion being more particularly described as:

That part of Section 10, T. 1 S., R. 9 E., City of Livonia, Wayne County, Michigan, described as the E. 10 acres of the N. W. 1/4 of Section 10, except the N. 530.73 feet thereof; also except the S. 43 feet thereof (7.93 acres)

City Park Site Designation "J-42"

SALES PRICE	$27,000.00	
proration of taxes as of April 24, 1969	473.85 +	
		$27,473.85
LESS		
revenue stamps	29.70	
title insurance	165.00	
	- $194.70	
NET CASH DUE SELLER		$27,279.15

ACCEPTED: SELLER

Edna Kremkow

PURCHASER

CITY OF LIVONIA, A
Michigan municipal corporation

By Harry C. Tatigian
Harry C. Tatigian
City Attorney

Dated: 6-25-69

Pursuant to council resolution #555-69 adopted at the regular meeting of the Council held on May 21, 1969.

CUSTOMER NUMBER

6/3/69 bab D-153248-F

Lawyers Title Insurance Corporation

HOME OFFICE - RICHMOND, VIRGINIA
MICHIGAN STATE OFFICE
735 GRISWOLD STREET - DETROIT, MICHIGAN 48226

APPLICANT AND ADDRESS

Lawyers Title Insurance Corporation, herein called the Company, hereby agrees to issue a policy of title insurance as hereinafter set forth upon satisfactory compliance with the requirements herein set forth.

The reverse side hereof is part of this commitment.

FORM OF POLICY TO BE ISSUED

A.L.T.A. OWNER'S POLICY	A.L.T.A. MORTGAGE POLICY WITHOUT EXCEPTIONS	MORTGAGE POLICY WITH EXCEPTIONS
$ 27,000.00	$	$

PARTY TO BE INSURED City of Livonia

Description Of Subject Land

Located In City of Livonia, Wayne County, Michigan

That part of Section 10, Town 1 South, Range 9 East, City of Livonia, Wayne County, Michigan, described as: the East 10 acres of the Northwest 1/4 of Section 10, except the North 530.73 feet thereof; also except the South 43 feet thereof.

Tax Item No. 1052a

OWNER, ENCUMBRANCES, EXCEPTIONS TO TITLE, UNPAID TAXES, ASSESSMENTS AND REQUIREMENTS FOR ISSUANCE OF POLICY.

1. OWNER: Walter H. Kremkow and Edna E. Kremkow, his wife

REQUIREMENT: RECORD DEED FROM ABOVE OWNERS TO CITY OF LIVONIA, A MICHIGAN CORPORATION.

2. County Tax: 1968 Paid

City Tax: 1968 Paid

FOR INFORMATION CALL R. S. Olivier EXAMINER, PHONE 963-5810

This commitment is preliminary to the issuance of a policy of title insurance and shall not be binding until it shall have been countersigned by an Agent or Authorized Officer of the Company.

This commitment is valid and binding for a period of 90 days only from the effective date hereof. In witness whereof, the Company has caused this commitment to be executed pursuant to its by-laws at Detroit, **Michigan effective as of** May 28, 1969 at 8:00AM

Lawyers Title Insurance Corporation

Frederick A. Thomas
SENIOR VICE PRESIDENT

COUNTERSIGNED BY

AGENT OR AUTHORIZED OFFICER

AUDIT NUMBER C 441147

OVER

F409393

WARRANTY DEED

STATUTORY FORM

10 P

L.17088 PA591

65

KNOW ALL MEN BY THESE PRESENTS: That WALTER OTTO WILLMAN AND FLORENCE LOUISE WILLMAN, his wife

whose address is* 32285 West Seven Mile Road
Livonia, Michigan

LEGAL DESCRIPTION APPROVED 6/18/69

Convey and Warrant to CITY OF LIVONIA, a Michigan municipal corporation

whose street number and postoffice address is 33001 Five Mile Road

the following described premises situated in the City of Livonia County of Wayne and State of Michigan, to-wit:

That part of the West 1/2 of the Northeast 1/4 of Section 10 described as beginning at a point on the North line of said section distant East, 243.90 feet from the North 1/4 corner of Section 10 and proceeding thence South parallel with the North and South line of said section, 1771.0 feet; thence East, 430.40 feet; thence North parallel with the North and South line of said section, 1771.0 feet to the North line of Section 10; thence West along said line, 430.40 feet to the point of beginning except the North 533 feet of the West 134.9 feet thereof.

together with all and singular the tenements, hereditaments and appurtenances thereunto belonging or in anywise appertaining,

for the sum of Forty-seven Thousand Dollars and 00/100 cents ($47,000.00) One Dollar(s)

and other valuable considerations;

subject to

APPROVED AS TO FORM
DEPARTMENT OF LAW
6-20-69

RECORDED JUL 24 1969 AT 2 16 P O'CLOCK M
BERNARD J. YOUNGBLOOD, Register of Deeds
WAYNE COUNTY, MICHIGAN 48226

Dated this 24th day of June 19 69

Signed in the presence of:

Harry C. Tatigian

Wm. Henry Caswell

Signed by:

Walter Otto Willman

Florence Louise Willman, his wife

STATE OF MICHIGAN TRANSFER TAX
Dept of Taxation

STATE OF MICHIGAN
COUNTY OF Wayne } ss.

On this 24th day of June 19 69 before me personally appeared Walter Otto Willman and Florence Louise Willman, his wife,

to me known to be the persons described in and who executed the foregoing instrument and acknowledged that they executed the same as their free act and deed.

Gladys M Hoener
Notary Public, Wayne County, Michigan

My Commission expires January 4, 19 72

County Treasurer's Certificate	City Treasurer's Certificate
This is to certify that there are no tax liens or titles on the property sold for FIVE YEARS previous to date of this instrument except as follows:	
JUL 24 1969 WAYNE COUNTY TREASURER	

When recorded return to:
Office of the City Clerk
33001 Five Mile Road
Livonia, Michigan 48154

Recording Fee
U.S. Rev. Stamps 51.70

Drafted by:* Harry C. Tatigian, City Attorney
Business address: 33001 Five Mile Road
Livonia, Michigan 48154

*See note re P.A. 1963, No.150, on reverse side.

717383

A-79

BURTON ABSTRACT AND TITLE COMPANY IS OPERATED CONTINUOUSLY SINCE 1866

MAKE YOUR REAL ESTATE TRANSFERS SAFE BY USING BURTON TITLE INSURANCE

F409393

F409395

10 Vn

L17088 PA593

70

WARRANTY DEED

STATUTORY FORM

KNOW ALL MEN BY THESE PRESENTS: That James W. Smelser and Beulah B. Smelser, his wife

whose address is* 32481 Seven Mile Road
Livonia, Michigan 48152

LEGAL DESCRIPTION APPROVED 6/18/69

Convey and Warrant to City of Livonia

whose street number and postoffice address is 33001 Five Mile Road

the following described premises situated in the City of Livonia County of Wayne and State of Michigan, to-wit:

That part of Section 10, T. 1 S., R. 9 E., City of Livonia, Wayne County, Michigan, described as the W. 82.50 feet of the S. 747.0 feet of the N. 1320.0 feet of the E. 16 acres of the W. 34 acres of the E. 60 acres of the N. W. 1/4 of Section 10. (1.41 acres)

Parcel #10V2

together with all and singular the tenements, hereditaments and appurtenances thereunto belonging or in anywise appertaining,

for the sum of Four Thousand Dollars and 00/100 cents ($4,000.00)

subject to

RECORDED JUL 24 1969 AT 2:16 O'CLOCK M
BERNARD J. YOUNGBLOOD, Register of Deeds
WAYNE COUNTY, MICHIGAN 48226

Dated this 23rd day of June 1969

Signed in the presence of:

Harry C. Tatigian

Sandra Ann Zaschak

Signed by:

James W. Smelser

Beulah B. Smelser

REAL ESTATE TRANSFER TAX MICHIGAN

Taxation

STATE OF MICHIGAN
COUNTY OF Wayne } ss.

On this 23rd day of June 1969 before me personally appeared James W. Smelser and Beulah B. Smelser, his wife

to me known to be the person S described in and who executed the foregoing instrument and acknowledged that executed the same as their free act and deed.

Harry C. Tatigian, *Notary Public, Wayne County, Michigan*

My Commission expires December 8 1970

County Treasurer's Certificate

This is to certify that there are no liens or titles on the property and that taxes are paid for FIVE YEARS previous to date of this instrument. WITNESS my hand

C548

JUL 24 1969 Wayne County Treasurer

City Treasurer's Certificate

APPROVED AS TO FORM
DEPARTMENT OF LAW
BY
DATE 6-23-69

When recorded return to:
Office of the City Clerk
33001 Five Mile Road
Livonia, Michigan 48154

Recording Fee
Rev. Stamps 4.40

Drafted by:* Harry C. Tatigian, City Atty.
Business address: 33001 Five Mile Road
Livonia, Michigan 48154

*See note re P.A. 1963, No.150, on reverse side.

717385

BURTON ABSTRACT AND TITLE COMPANY L. OPERATED CONTINUOUSLY SINCE 1866

F409395 MAKE YOUR REAL ESTATE TRANSFERS SAFE BY USING BURTON TITLE INSURANCE

Lawyers Title Insurance Corporation

Home Office ~ Richmond, Virginia

CASE NO. D-153246

AMOUNT

$--4,000.00--

OWNER'S TITLE INSURANCE POLICY

SCHEDULE A

EFFECTIVE DATE

July 30, 1969

at 8:00 A.M.

NAME OF INSURED

CITY OF LIVONIA, a Michigan Corporation

1. The estate or interest in the land described or referred to in this Schedule covered by this Policy is:

Fee Simple.

2. Title to the estate or interest covered by this Policy at the date hereof is vested in the Insured.

3. The land referred to in this Policy is described as follows:

Land in the City of Livonia, County of Wayne, State of Michigan, described as:

Part of Section 10, Townl South, Range 9 East, City of Livonia, Wayne County, Michigan, described as:the West 82.50 feet of the South 747.0 feet of the North 1320.0 feet of the East 16 acres of the West 34 acres of the East 60 acres of the Northwest 1/4 of Section 10.

Countersigned:

Catherine Grant

Authorized Officer or Agent

Issued at: Detroit, Michigan

ORIGINAL

Page 1—Sched. A—Policy No. V563963

Lawyers Title Insurance Corporation

Home Office ~ Richmond, Virginia

Case No. D-153246

OWNER'S TITLE INSURANCE POLICY

SCHEDULE B

This Policy does not insure against loss or damage by reason of the following:

1. Rights or claims of parties in possession not shown of record.
2. Unrecorded water, mineral and oil rights, unrecorded easements and claims of easement, boundary line disputes not disclosed of record and any matters which would be disclosed by an accurate survey and inspection of the premises.
3. Mechanics' liens not of record.
4. The dower or homestead rights, if any, of the wife of any individual insured or of any individual shown herein to be a party in interest.

5. Easement for water main purposes to Board of Wayne County Road Commissioners, recorded in Liber 5240, on Page 292, Register No. C-360762.

6. Rights of the public in that portion of the captioned land being used as a public street or highway.

8/11/69 od

Policy 72—Mich. Rev. 10-66 50M—Litho in U.S.A.

ORIGINAL

American Land Title Association Owner's Policy—Standard Form B—1962

DEPARTMENT OF LAW

CITY ATTORNEY
HARRY C. TATIGIAN

ASSISTANT CITY ATTORNEYS
ALBERT W. EASTON
GARY L. SACKETT

HARVEY W. MOELKE
MAYOR

33001 FIVE MILE ROAD
LIVONIA, MICHIGAN 48154
GARFIELD 1-2000

June 23, 1969

TO: ADDISON W. BACON, CITY CLERK

FROM: DEPARTMENT OF LAW

SUBJECT: PARK SITE PROPERTY IN SECTION 10 (SMELSER)

REF: CR-556-69 (CITY PARK SITE DESIGNATION J-45)

Dear Sir:

The Council by resolution #556-69 authorized the Department of Law to purchase Parcel 10V2 for use as a future park site. Pursuant to such authorization, the Department of Law finalized such purchase with the owners thereof, James W. Smelser and his wife, Beulah B. Smelser on June 23, 1969 in the Office of the City Attorney. In this connection we are forwarding to you herewith the following documents:

1. Closing Statement;
2. Commitment for Title Insurance, No. D-153246-F issued by Lawyers Title Insurance Corporation;
3. Order to Issue Owner's Policy;
4. Statement in the amount of $50.00 from Lawyers Title to cover cost of the policy.

The Warranty Deed, conveying the subject property ot the City, has been transmitted to the Council for acceptance.

We would appreciate it if you would please order the title insurance policy and pay the aforesaid statement which has been authorized in the aforesaid council resolution.

Very truly yours,

Harry C. Tatigian, City Attorney

HCT:z
Enclosures (4)

CLOSING STATEMENT

SELLERS: James & Bealah Smelser
32481 Seven Mile Road
Livonia, Michigan

PURCHASER: City of Livonia, a Michigan municipal corporation
33001 Five Mile Road
Livonia, Michigan

PROPERTY: A portion of Taxation Parcel 10V2, said portion being more particularly described as:

That part of Section 10, T. 1 S., R. 9 E., City of Livonia, Wayne County, Michigan, described as the W. 82.50 feet of the S. 747.0 feet of the N. 1320.0 feet of the E. 16 acres of the W. 34 acres of the E. 60 acres of the N. W. 1/4 of Section 10. (1.41 acres)

City Park Site Designation "J-45"

SALES PRICE	$4,000.00	
proration of taxes as of April 28, 1969	83.03 +	
		$4,083.03
LESS		
Revenue stamps	4.40 -	
NET CASH DUE SELLERS		$4,078.63

NOTE: (City assumes title work).

ACCEPTED: SELLERS

James W. Smelser
Bealah Smelser

PURCHASER

CITY OF LIVONIA, a Michigan municipal corporation

BY Harry C. Tatigian
Harry C. Tatigian
City Attorney

Dated: 6-23-69

Pursuant to council resolution #556-69 adopted at the regular meeting of the Council held on May 21, 1969.

CUSTOMER NUMBER

COMMITMENT FOR TITLE INSURANCE 0/3/09 06

Lawyers Title Insurance Corporation

D-153246-F

HOME OFFICE - RICHMOND, VIRGINIA
MICHIGAN STATE OFFICE
735 GRISWOLD STREET - DETROIT, MICHIGAN 48226

APPLICANT'S ADDRESS

Lawyers Title Insurance Corporation, herein called the Company, hereby agrees to issue a policy of title insurance as hereinafter set forth upon satisfactory compliance with the requirements herein set forth.

The reverse side hereof is part of this commitment.

FORM OF POLICY TO BE ISSUED

A.L.T.A. OWNER'S POLICY	A.L.T.A. MORTGAGE POLICY WITHOUT EXCEPTIONS	MORTGAGE POLICY WITH EXCEPTIONS
$ 4,000.00	$	$

PARTY TO BE INSURED City of Livonia

Description Of Subject Land

Located In City of Livonia, Wayne County, Michigan

That part of Section 10, Town 1 South, Range 9 East, City of Livonia, Wayne County, Michigan, described as the West 82.50 feet of the South 747.0 feet of the North 1320.0 feet of the East 16 acres of the West 34 acres of the East 60 acres of the Northwest $\frac{1}{4}$ of Section 10.

Tax Item No. 10V2

OWNER, ENCUMBRANCES, EXCEPTIONS TO TITLE, UNPAID TAXES, ASSESSMENTS AND REQUIREMENTS FOR ISSUANCE OF POLICY.

1. OWNER: James W. Smelser and Beulah S. Smelser, his wife.

REQUIREMENT: RECORD DEED FROM ABOVE OWNERS TO CITY OF LIVONIA, A MICHIGAN CORPORATION.

2. Easement for water main purposes to Board of Wayne County Road Commissioners recorded in Liber 5240, Page 292, Register No. C-360762.

REQUIREMENT: NONE. WILL BE SHOWN IN FINAL POLICY.

3. Rights of the public in that portion of the captioned land being used as a public street or highway.

REQUIREMENT: NONE. ABOVE TO BE SHOWN ON FINAL POLICY.

4. County Tax: 1968 Paid
City Tax: 1968 Paid

FOR INFORMATION CALL R. S. Olivier EXAMINER, PHONE 963-5810

This commitment is preliminary to the issuance of a policy of title insurance and shall not be binding until it shall have been countersigned by an Agent or Authorized Officer of the Company.

This commitment is valid and binding for a period of 90 days only from the effective date hereof. In witness whereof, the Company has caused this commitment to be executed pursuant to its by-laws at Detroit **Michigan effective as of** May 28,1969 at 8:00 A. M.

Lawyers Title Insurance Corporation

Frederick A. Thomson
SENIOR VICE PRESIDENT

COUNTERSIGNED BY

Herbert C. Schneider
AGENT OR AUTHORIZED OFFICER

AUDIT NUMBER C 441146

OVER

F368476

1091

73

WARRANTY DEED

STATUTORY FORM

L16952 PA388

KNOW ALL MEN BY THESE PRESENTS: That GEORGE H. SHANKLIN, a single man, 32295 W. Seven Mile Road, Livonia, Michigan

whose address is*

Convey S and Warrant S to CITY OF LIVONIA, a Michigan Municipal Corporation

whose street number and postoffice address is 33001 Five Mile Road, Livonia, Michigan 48154

the following described premises situated in the City of Livonia County of Wayne and State of Michigan, to-wit: That part of Section 10, T. 1 S., R. 9 E., City of Livonia, Wayne County, Michigan, described as the E. 171.2 feet of the W. 243.9 feet of the N. 1771 feet of the N.E. 1/4 of Section 10, except the N. 530.73 feet thereof.

APPROVED AS TO FORM

BY

DATE 2-5-69

LEGAL DESCRIPTION APPROVED

F368476

MAKE YOUR REAL ESTATE TRANSFERS SAFE BY USING BURTON TITLE INSURANCE

BURTON ABSTRACT AND TITLE COMPANY . . . OPERATED CONTINUOUSLY SINCE 1886

together with all and singular the tenements, hereditaments and appurtenances thereunto belonging or in anywise appertaining, for the sum of Thirteen Thousand and no/100 Dollars ($13,000.00)

subject to

RECORDED MAR 10 1969 AT 10 39 O'CLOCK AM
BERNARD J. YOUNGBLOOD, Register of Deeds
WAYNE COUNTY, MICHIGAN 48226

Dated this 31st day of January 1969

Signed in the presence of:

George A. Weible

Gerald R. Marshall

Signed by:

George H. Shanklin

STATE OF REAL ESTATE

STATE OF MICHIGAN
COUNTY OF Wayne } ss.

On this 31st day of January 1969 before me personally appeared George H. Shanklin

to me known to be the person described in and who executed the foregoing instrument and acknowledged that he executed the same as his free act and deed.

Gerald R. Marshall, Notary Public, Wayne County, Michigan

My Commission expires January 10th 1970

County Treasurer's Certificate	City Treasurer's Certificate
1968 NOT EXAMINED MAR 10 1969	

When recorded return to:
Livonia City Clerk
33001 Five Mile Road
Livonia, Michigan 48154

Recording Fee 2063 32
Rev. Stamps 14.85

*See note re P.A. 1963, No.150, on reverse side.

Drafted by:* George A. Weible, Asst. City Atty.
Business address: 33001 Five Mile Rd.
Livonia, Michigan 48154

Lawyers Title Insurance Corporation

A Stock Company

Home Office ~ Richmond, Virginia

OWNER'S TITLE INSURANCE POLICY

SCHEDULE A

CASE NO. D-147360

AMOUNT

$ 13,000.00

EFFECTIVE DATE

March 18, 1969

at 8:00 A.M.

NAME OF INSURED

CITY OF LIVONIA, a Michigan Municipal Corporation

1. The estate or interest in the land described or referred to in this Schedule covered by this Policy is:

Fee Simple.

2. Title to the estate or interest covered by this Policy at the date hereof is vested in the Insured.

3. The land referred to in this Policy is described as follows:

Land in the City of Livonia, County of Wayne, State of Michigan, described as:

That part of Section 10, Town 1 South, Range 9 East, City of Livonia, Wayne County, Michigan, described as the East 171.2 feet of the West 243.9 feet of the North 1771 feet of the Northeast 1/4 of Section 10, except the North 530.73 feet thereof.

Countersigned:

DETROIT BRANCH OFFICE

Authorized Officer or Agent

Issued at: DETROIT, MICHIGAN

ORIGINAL Page 1—Sched. A—Policy No. T. 237934

Lawyers Title Insurance Corporation

Home Office ~ Richmond, Virginia

Case No. D-147360

OWNER'S TITLE INSURANCE POLICY

SCHEDULE B

This Policy does not insure against loss or damage by reason of the following:

1. Rights or claims of parties in possession not shown of record.
2. Unrecorded water, mineral and oil rights, unrecorded easements and claims of easement, boundary line disputes not disclosed of record and any matters which would be disclosed by an accurate survey and inspection of the premises.
3. Mechanics' liens not of record.
4. The dower or homestead rights, if any, of the wife of any individual insured or of any individual shown herein to be a party in interest.
5. 1968 County tax - due as to State's portion
   1968 City tax - due as to State's portion

cr

Policy 72–Mich. Rev. 10-66–Litho in U.S.A.

ORIGINAL American Land Title Association Owner's Policy–Standard Form B–1962

OFFICE OF THE CITY ATTORNEY

CITY ATTORNEY - Harry C. Tatigian
~~STEVE POLGAR~~
~~CHIEF ASSISTANT CITY ATTORNEY~~
~~HARRY C. TATIGIAN~~
ASSISTANT CITY ATTORNEYS
~~DAVID A. PERRY~~
~~GEORGE A. WEIBLE~~
ALBERT W. EASTON

HARVEY W. MOELKE
MAYOR

To Lawyers Title
3/6/69

33001 FIVE MILE ROAD
LIVONIA, MICHIGAN 48154
GARFIELD 1-2000

February 3, 1969

TO: ADDISON W. BACON, City Clerk

FROM: DEPARTMENT OF LAW

SUBJECT: Park Site Property in Section 10
(Shanklin - Park Site Designation J-40)

Dear Sir:

The Council by resolution #39-69 authorized the Department of Law to purchase the East 171.2 feet of the West 243.9 feet of the North 1771 feet of the N.E. 1/4 of Section 10, except the North 530.73 feet thereof, as park site property. Pursuant to the aforesaid authorization, we commenced negotiations with the owner, George H. Shanklin, and finalized the purchase of such property on January 31, 1969. In this connection, we are forwarding to you the following documents:

1. Closing statement;
2. Commitment for title insurance issued by Lawyers Title Insurance Corporation - Case No. D-147360-F;
3. Order to issue owner's title policy; and
4. Statement in the amount of $95.00 from Lawyers Title for the policy.

We would appreciate your paying the statement in the amount of $95.00, which sum was authorized by Council Resolution #39-69, and ordering the title policy. We are transmitting the deed, conveying the aforesaid property to the City, to the Council for acceptance.

Very truly yours,

Harry C. Tatigian, City Attorney

HCT:gh
Encls.

CLOSING STATEMENT

SELLER: GEORGE H. SHANKLIN
32295 W. Seven Mile Road
Livonia, Michigan 48150

PURCHASER: CITY OF LIVONIA, a Michigan Municipal Corporation
33001 Five Mile Road
Livonia, Michigan 48154

PROPERTY: BUREAU OF TAXATION PARCEL 10Q1
(Park Parcel Designation "J-40")

SALES PRICE		$13,000.00	
Assessment	$8,200.00		
Building	$3,830.00		
	$12,030.00		

Taking is 4.87/6.96 of land

$\frac{4.87}{6.96} \times \frac{8200}{12,030} = .48$ of taxes as City responsibility

1968 taxes $397.17 x .48 = $190.64
342 days @ .553 — 181.26 — $13,181.26

Less revenue stamps — 14.85 — 14.85
~~1968 taxes~~ paid 1/29/69 Jwd — ~~[illegible]~~ — ~~[illegible]~~

NET CASH DUE SELLER — ~~$13,[illegible]~~ 13,166.41

ACCEPTED:

SELLER:
George H. Shanklin
by Gerald D. Marshall atty
George H. Shanklin

PURCHASER:

CITY OF LIVONIA,
a Michigan Municipal Corporation

by: George A. Weible
George A. Weible
Assistant City Attorney

Dated: January 31, 1969

CUSTOMER NUMBER

D-147360-F

Lawyers Title Insurance Corporation

HOME OFFICE · RICHMOND, VIRGINIA
MICHIGAN STATE OFFICE
735 GRISWOLD STREET · DETROIT, MICHIGAN 48226

APPLICANT AND ADDRESS

Lawyers Title Insurance Corporation, herein called the Company, hereby agrees to issue a policy of title insurance as hereinafter set forth upon satisfactory compliance with the requirements herein set forth.

The reverse side hereof is part of this commitment.

FORM OF POLICY TO BE ISSUED

A.L.T.A. OWNER'S POLICY	A.L.T.A. MORTGAGE POLICY WITHOUT EXCEPTIONS	MORTGAGE POLICY WITH EXCEPTIONS
$ 13,000.00	$	$

PARTY TO BE INSURED City of Livonia,

Located In City of Livonia, Description Of Subject Land Wayne County, Michigan

That part of Section 10, Town 1 South, Range 9 East, City of Livonia, Wayne County, Michigan, described as the East 171.2 feet of the West 243.9 feet of the North 1771 feet of the Northeast 1/4 of Section 10, except the North 530.73 feet thereof.

Tax Item No.10Q1

OWNER, ENCUMBRANCES, EXCEPTIONS TO TITLE, UNPAID TAXES, ASSESSMENTS AND REQUIREMENTS FOR ISSUANCE OF POLICY.

1. OWNER: George H. Shanklin.

REQUIREMENT: RECORD DEED FROM ABOVE OWNER, AND WIFE IF MARRIED, TO CITY OF LIVONIA, A MICHIGAN MUNICIPAL CORPORATION.

2. County Tax: 1968 Unpaid as to Owners portion ($397.17)
Unpaid as to States portion ($142.06)

City Tax: 1968 Unpaid

REQUIREMENT: PAYMENT OF ABOVE TAXES AND/OR ASSESSMENTS, OR SAME TO BE SHOWN ON FINAL POLICY.

FOR INFORMATION CALL Paul Bachmann **EXAMINER, PHONE** 963-5810

This commitment is preliminary to the issuance of a policy of title insurance and shall not be binding until it shall have been countersigned by an Agent or Authorized Officer of the Company.

This commitment is valid and binding for a period of 90 days only from the effective date hereof.
In witness whereof, the Company has caused this commitment to be executed pursuant to its by-laws
at Detroit, **Michigan effective as of** Jan.17,1969 at 8:00 A.M.

Lawyers Title Insurance Corporation

Frederick A. Thomas
SENIOR VICE PRESIDENT

COUNTERSIGNED BY

Gerald A. Meredith
AGENT OR AUTHORIZED OFFICER

AUDIT NUMBER C 419679

OVER

CUSTOMER NUMBER

COMMITMENT FOR TITLE INSURANCE

Lawyers Title Insurance Corporation

D-147360-F

HOME OFFICE · RICHMOND, VIRGINIA
MICHIGAN STATE OFFICE
735 GRISWOLD STREET · DETROIT, MICHIGAN 48226

APPLICANT ADDRESS

Lawyers Title Insurance Corporation, herein called the Company, hereby agrees to issue a policy of title insurance as hereinafter set forth upon satisfactory compliance with the requirements herein set forth.

The reverse side hereof is part of this commitment.

FORM OF POLICY TO BE ISSUED

A.L.T.A. OWNER'S POLICY	A.L.T.A. MORTGAGE POLICY WITHOUT EXCEPTIONS	MORTGAGE POLICY WITH EXCEPTIONS
$ 13,000.00	$	$

PARTY TO BE INSURED City of Livonia,

Located in City of Livonia, Description Of Subject Land Wayne County, Michigan

That part of Section 10, Town 1 South, Range 9 East, City of Livonia, Wayne County, Michigan, described as the East 171.2 feet of the West 243.9 feet of the North 1771 feet of the Northeast 1/4 of Section 10, except the North 530.73 feet thereof.

Tax Item No.10Q1

OWNER, ENCUMBRANCES, EXCEPTIONS TO TITLE, UNPAID TAXES, ASSESSMENTS AND REQUIREMENTS FOR ISSUANCE OF POLICY.

1. OWNER: George H. Shanklin.

REQUIREMENT: RECORD DEED FROM ABOVE OWNER, AND WIFE IF MARRIED, TO CITY OF LIVONIA, A MICHIGAN MUNICIPAL CORPORATION.

2. County Tax: 1968 Unpaid as to Owners portion ($397.17)
Unpaid as to States portion ($142.06)

City Tax: 1968 Unpaid

REQUIREMENT: PAYMENT OF ABOVE TAXES AND/OR ASSESSMENTS, OR SAME TO BE SHOWN ON FINAL POLICY.

FOR INFORMATION CALL Paul Bachmann EXAMINER, PHONE 963-5810

This commitment is preliminary to the issuance of a policy of title insurance and shall not be binding until it shall have been countersigned by an Agent or Authorized Officer of the Company.

This commitment is valid and binding for a period of 90 days only from the effective date hereof. In witness whereof, the Company has caused this commitment to be executed pursuant to its by-laws at Detroit, Michigan effective as of Jan. 17, 1969 at 8:00 A.M.

Lawyers Title Insurance Corporation

Frederick A. Thomas
SENIOR VICE PRESIDENT

COUNTERSIGNED BY

Gerald C. Meredian
AGENT OR AUTHORIZED OFFICER

AUDIT NUMBER C 419679

OVER

extra (5)

January 31, 1969

TO: HARRY C. TATIGIAN, Chief Assistant City Attorney

FROM: GEORGE A. WEIBLE, Assistant City Attorney

SUBJECT: Land Acquired as of January 31, 1969.

*(1)	19.81 acres in Section 21, Aubert/Smaniotto Property	5-31-66 1-13-67	$ 26,000.00 36,000.00
(2)	19.36 acres in Section 21, adjacent to YMCA	4-10-67	116,160.00
(3)	37.77 acres in Section 9, Sheridan/Ferry Property	9-14-67	128,418.00
(4)	8.81 acres in Section 2, Senior Citizens Housing Site	10-31-67	113,500.00
(5)	Land Contracts -		
	Castle Gardens, Section 19	5-31-67	
	Elm Park, Section 25	3-30-67	
	Schanhite Marquette, Section 25	4- 5 -67	30,232.50
*(6)	Golf Course, Section 5	8-20-64	439,152.00
*(7)	9.01 acres in Section 17, Fairway Farms Swim Club	7-25-68	54,714.73
*(8)	4 acres in Section 8, Zayti	10-16-68	16,000.00
*(9)	4.14 acres in Section 10, Mr. and Mrs. Lake	10- 3-68	14,500.00
*(10)	4.87 acres in Section 10, George Shanklin	1-31-69	13,000.00

*(11)	.57 acres in Section 36, Frank Iglikowski	1-13-69	$ 2,400.00
*(12)	.89 acres in Section 36, Delmar Henneman	10-30-68	3,750.00
*(13)	.52 acres in Section 11, Dave Pink	9-17-68	4,290.00
*(14)	.62 acres in Section 11, Victor Kind	1-28-69	4,300.00
(15)	3.54 acres which exists as Park Site T has been acquired by dedication as part of Tiffany Park #4 and #5.		w/o cost

In Process:

P	9.5 acres in Section 17 from K-M Land Co. for $38,000.00 (in Council)
Y	4.13 acres in Section 22 from Asa Wilson for $17,800.00 (in Council)
CC-143	.43 acres in Section 36 from Bennie Schibior for $1800.00 (in Council)

Very truly yours,

By:_____
George A. Weible, Assistant City Atty.

GAW:dl

*federal acceptance

1012

LI 16869 PA 423

WARRANTY DEED—Statutory Form
Act 187 P.A. 1881 - M.S.A. 26.571

F344432

F-561 10-60

Abstract and Title Guaranty Division
of Lawyers Title Insurance Corporation
Wayne Oakland Macomb Midland Washtenaw

KNOW ALL MEN BY THESE PRESENTS: That ANTHONY T. LAKE and ISABEL LAKE, his wife, 32510 Curtis Avenue, Livonia, Michigan

Convey and Warrant to the CITY OF LIVONIA, a Michigan Municipal Corporation

LEGAL DESCRIPTION APPROVED 10/7/68

whose Street Number and Post Office address is 33001 Five Mile Road, Livonia, Michigan

the following described premises situated in the City of Livonia County of Wayne and State of Michigan, to-wit: The North 683.70 feet of the following described parcel of land: Land in the Township of Livonia, Wayne County, Michigan, described as: South 983.7 feet of East 16 acres of West 34 acres of East 60 acres of northwest quarter of Section 10, town 1 south, range 9 east, Livonia Township, Wayne County, Michigan, which parcel of land is more particularly described as: Beginning at a point in the east and west quarter line of Section 10, Livonia Township, Wayne County, Michigan, which point is distant west 434.5 feet from center of said section; thence north parallel to the north and south quarter line of said section 983.7 feet to an iron stake; thence west parallel to the east and west quarter line of said section 264.50 feet to an iron stake; thence south parallel to the north and south quarter line of said section 983.7 feet to a point in the east and west quarter line of said section; thence east along said east and west quarter line 264.50 feet to point of beginning excepting any part of the above described land taken, used or deeded for street, road or highway purposes.

together with all the singular the tenements, hereditaments and appurtenances thereunto belonging or in anywise appertaining

for the sum of Fourteen Thousand Five Hundred Dollars ($14,500.00) ---- ~~ONE DOLLAR~~

and other valuable considerations;

subject to easements and restrictions of record.

APPROVED AS TO FORM
DEPARTMENT OF LAW
BY George Weible
DATE October 7, 1968

F344432

TITLE INSURANCE--ABSTRACTS--ESCROWS

Dated this 3rd day of October A. D. 19 68

Signed, Sealed and Delivered in Presence of:

Gladys M. Hoener
Gladys M. Hoener

George Weible
George Weible

RECORDED DEC 10 1968 AT 11:50 O'CLOCK A M
BERNARD J. YOUNGBLOOD, Register of Deeds
WAYNE COUNTY, MICHIGAN 48226

Signed and Sealed:

Anthony T. Lake (L. S.)
Anthony T. Lake

Isabel Lake (L. S.)
Isabel Lake

SEAL ISSUE (L. S.)

(L. S.)

TEXATION

In the STATE OF MICHIGAN, COUNTY OF Wayne ss.
On this 3rd day of October A. D. 1968 before me personally appeared ANTHONY T. LAKE and ISABEL LAKE, his wife,
to me known to be the person S described in and who executed the foregoing instrument and acknowledged that they executed the same as their free act and deed.

My commission expires January 4 A. D. 1972

Gladys M. Hoener
Gladys M. Hoener
Notary Public Wayne County, Michigan

PURSUANT TO RESOLUTION #
Approved by City Council on 9-23-68

County Treasurer's Certificate: I hereby certify that there are no liens or titles on this property and that taxes are paid for FIVE YEARS previous to date of this instrument EXCEPT
No. 2561
DEC 10 1968 Louis M. Frank WAYNE COUNTY TREASURER

City Treasurer's Certificate

Recording Fee
U. S. Revenue Stamps $15.95

When recorded return to Office of the City Clerk
33001 Five Mile Road, Livonia, Michigan 48154

Instrument drafted by: George A. Weible, Dept. of Law
33001 Five Mile Rd., Livonia, Mich.

699104

APPENDIX B: PROJECT DESCRIPTIONS

City of Livonia

Wayne County Parks Grant Application (District 9)

2025 Livonia Parks Improvement

Detailed description of the project:

The City of Livonia requests funding to add a senior playground at Rotary Park.

These improvements would include the following:
Addition of senior playground on site.

Estimate of total cost:

The total cost is estimated to be $150,000.00

Detail the County resources requested:

The City of Livonia is requesting the County reimburse for the project cost not exceeding $106,401.00.

The project must be included in the requestor's capital improvement plan:

The proposed project is incorporated in the capital improvement plan.

Evidence that the requestor's portion of the financing is secured and available:

Upfront funding for the entire project will be provided by the City of Livonia from the Community Recreation Fund as approved by the Council.

Describe the impact the project will have on the Wayne County Parks System:

The City of Livonia proposes a Rotary Park project for District 9. The City of Livonia wants to add an outdoor senior playground the site. The site boasts over several thousand visits annually and hosts summer camps and special events. The proposed addition will add another well-used and requested amenity to the overall site.

Analysis of the benefits to Wayne County residents:

Wayne County residents will have access to another safe, accessible environment to promote their health and wellness and gather with family and friends.

Describe the community that the project will impact:

Livonia may be characterized as a carefully and successfully planned community of residential, industrial, commercial, and civic development. The City has never had a central business district because of its former status as a township. However, despite unprecedented urban growth, we have successfully maintained its friendly hometown atmosphere.

Livonia Township was organized in 1835 with the same boundaries as today. Livonia was incorporated as a City on May 23, 1950.

The City, part of the Detroit urbanized area, forms a perfect 36 square mile area in the northwestern portion of Wayne County. Its boundaries are Inkster Road on the east, Eight Mile Road on the north, Eckles Road and Haggerty Road on the west, and Joy Road on the south.

Livonia enjoys unmatched accessibility. The City's strategic location offers easy east-west access via the Jeffries Expressway (I-96) and north-south transportation on the I-275 expressway. Major highways and interstates fan out in every direction, providing convenient drive times.

Concerning recreation planning, the City has long been recognized as progressive in its approach to acquiring, preserving, and promoting recreational areas and programs for both its existing and future residents. Over 1,389 acres of recreational open space exist within the City – well over the 10 acres per 1000 residents as recommended by parks and recreation experts.

Recreational opportunities in Livonia include one archery range; the Community Recreation Center; three 18-hole public golf courses; seven in-line skating courses; 10 sand volleyball courts; 28 tennis courts; 12 pickleball courts; six walking paths; two ice arenas with three sheets of ice (leased to a private operator); three outdoor swimming pools; 43 baseball diamonds; and 25 soccer fields. The parks also offer 17 picnic pavilions, play structures at 23 neighborhood parks for all ages, three fitness clusters, six miles of nature trails, and 11 designated nature preserve areas.

Legal Descriptions: See attached title search

City of Livonia

Wayne County Parks Grant Application (District 9)

2025 Livonia Parks Improvement

Detailed description of the project:

The City of Livonia requests funding to add a senior playground at Rotary Park.

These improvements would include the following:
Addition of senior playground on site.

Estimate of total cost:

The total cost is estimated to be $150,000.00

Detail the County resources requested:

The City of Livonia is requesting the County reimburse for the project cost not exceeding $106,401.00.

The project must be included in the requestor's capital improvement plan:

The proposed project is incorporated in the capital improvement plan.

Evidence that the requestor's portion of the financing is secured and available:

Upfront funding for the entire project will be provided by the City of Livonia from the Community Recreation Fund as approved by the Council.

Describe the impact the project will have on the Wayne County Parks System:

The City of Livonia proposes a Rotary Park project for District 9. The City of Livonia wants to add an outdoor senior playground the site. The site boasts over several thousand visits annually and hosts summer camps and special events. The proposed addition will add another well-used and requested amenity to the overall site.

Analysis of the benefits to Wayne County residents:

Wayne County residents will have access to another safe, accessible environment to promote their health and wellness and gather with family and friends.

Describe the community that the project will impact:

Livonia may be characterized as a carefully and successfully planned community of residential, industrial, commercial, and civic development. The City has never had a central business district because of its former status as a township. However, despite unprecedented urban growth, we have successfully maintained its friendly hometown atmosphere.

Livonia Township was organized in 1835 with the same boundaries as today. Livonia was incorporated as a City on May 23, 1950.

The City, part of the Detroit urbanized area, forms a perfect 36 square mile area in the northwestern portion of Wayne County. Its boundaries are Inkster Road on the east, Eight Mile Road on the north, Eckles Road and Haggerty Road on the west, and Joy Road on the south.

Livonia enjoys unmatched accessibility. The City's strategic location offers easy east-west access via the Jeffries Expressway (I-96) and north-south transportation on the I-275 expressway. Major highways and interstates fan out in every direction, providing convenient drive times.

Concerning recreation planning, the City has long been recognized as progressive in its approach to acquiring, preserving, and promoting recreational areas and programs for both its existing and future residents. Over 1,389 acres of recreational open space exist within the City – well over the 10 acres per 1000 residents as recommended by parks and recreation experts.

Recreational opportunities in Livonia include one archery range; the Community Recreation Center; three 18-hole public golf courses; seven in-line skating courses; 10 sand volleyball courts; 28 tennis courts; 12 pickleball courts; six walking paths; two ice arenas with three sheets of ice (leased to a private operator); three outdoor swimming pools; 43 baseball diamonds; and 25 soccer fields. The parks also offer 17 picnic pavilions, play structures at 23 neighborhood parks for all ages, three fitness clusters, six miles of nature trails, and 11 designated nature preserve areas.

Legal Descriptions: See attached title search

EXHIBIT C: SIGNAGE SPECIFICATIONS

Attached, please find the sketch and samples of the sign layout that we are suggesting for all IGA Grant projects. The specifications are as follows:

All parks millage signs must include language that states, **made possible through the Wayne County Parks millage in cooperation with (*place your municipality name here)***

- Sign size 48’ x 30’ ¾’ marine grade plywood
- Sign is to be one sided, two sides is optional
- To be cut with” carriage “style top i.e. arched (optional)
- Color options are determined by the municipality
- Font should be traditional styles in Helveticas, Arial, Times New Roman
- Include County Logo, County Executive and County Commissioners names.
- We suggest using 3M Reflective Adhesive waterproof vinyl. Painting is optional
- Vertical post shall be 4’x 6’ weather proof timbers routed on 4’ side to accommodate the sign, staining of posts optional
- Bury post a minimum of 42’ into ground and backfill with dirt and compost, concrete footing is optional
- Bottom of sign shall be 2ft. minimum above grade
- Sign will be secured to post with flat head Galvanized wood screws (approx. #10) 2 per post (min.)
- Proof to be provided of final design prior to fabrication and installation

We are flexible on fabrication and colors as long as it resembles the example attached.
Any request to deviate from the signage should be directed to the Parks Director.

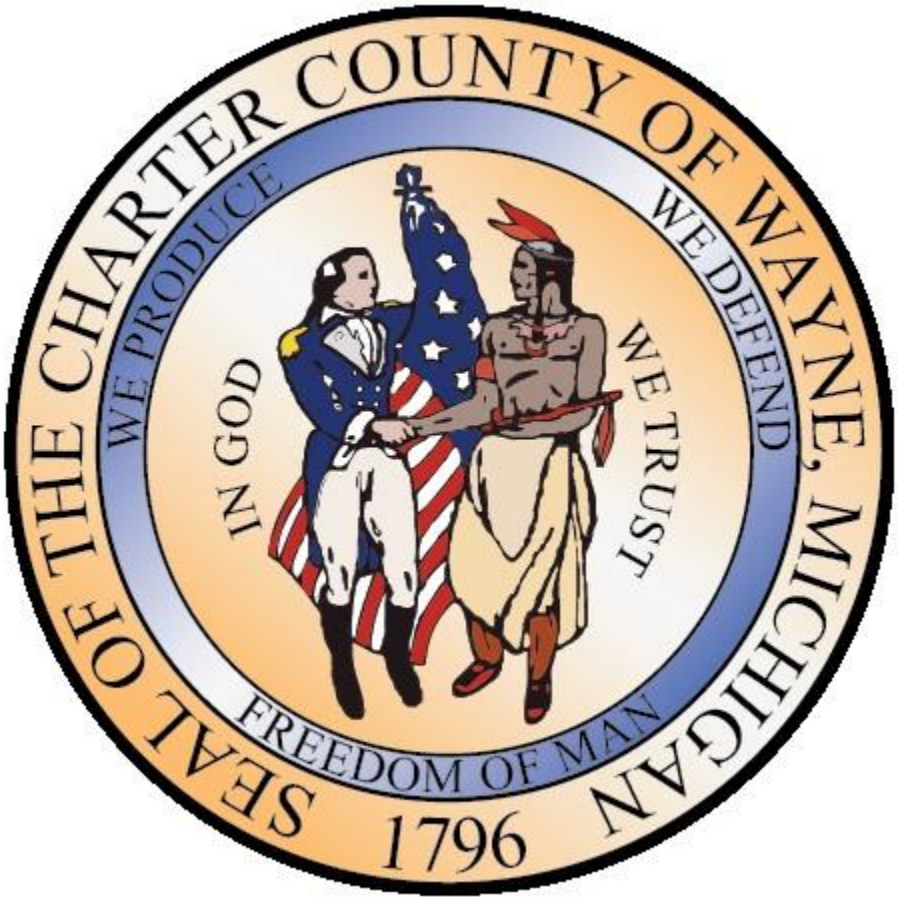
SEAL OF THE CHARTER COUNTY OF WAYNE, MICHIGAN
WE PRODUCE
WE DEFEND
IN GOD
WE TRUST
FREEDOM OF MAN
1796

Exhibit D: INSURANCE COVERAGES

City, at its expense, or any contractors, subcontractors, consultants or agents retained by City (each a "Contractor"), at their own expense, shall procure and maintain for the duration of this Agreement, insurance against claims for injuries to persons or damages to property which may arise from or in connection with the performance of the services by the Contractor, its agents, representatives or employees. Contractor shall maintain at least the following minimum coverage:

Commercial General Liability (CGL)

Insurance Services Office Form CG 00 01 covering CGL on an "occurrence" basis, including products and completed operations, property damage, bodily injury and personal and advertising injury with limits no less than $1,000,000 per occurrence. If a general aggregate limit applies, either the general aggregate limit shall apply separately to this Contract or the general aggregate limit shall be twice the required occurrence limit.

Umbrella or Excess Liability

Policy in an amount not less than $1,000,000. Umbrella or excess policy wording shall be at least as broad as the primary or underlying policy(ies) and shall apply both to the Contractor's general liability and to its automobile liability insurance and shall be written on an occurrence basis. The County, officials, employees and others as may be specified in any "Special Conditions" shall be named as an additional insured under this policy.

Automobile Liability

Insurance Services Office Form Number CA 0001 covering, Code 1 (any auto), or if Contractor has no owned autos, Code 8 (hired) and 9 (non-owned), with limits no less than $1,000,000 per accident for bodily injury and property damage.

Workers' Compensation

Insurance as required by the State of Michigan, with Statutory limits, and employer's liability insurance with limits of no less than $1,000,000 per accident for bodily injury or disease.

Professional Liability (if Design/Build)

Insurance appropriate to the Contractor's profession, with limits no less than $3,000,000 per occurrence or claim, $3,000,000 aggregate.

Builder's Risk (Course of Construction)

Insurance utilizing "All Risk" (Special Perils) coverage form, with limits equal to the completed value of the project and no coinsurance penalty provisions.

Contractors' Pollution Legal Liability and/or Asbestos Legal Liability and/or Errors and Omissions (if project involves environmental hazards)

Insurance with limits no less than $1,000,000 per occurrence or claim, and $2,000,000 policy aggregate.

If the Contractor maintains higher limits than the minimum insurance coverage required as stated above in this Exhibit, the Contractor shall maintain the coverage for the higher insurance

limits for the duration of this Agreement.

Additional Insured Status

The County, its officers, officials, employees, volunteers, and others as may be specified in any "Special Conditions" shall be additional insureds on the CGL policy with respect to liability arising out of work or operations performed by or on behalf of the Contractor including materials, parts, or equipment furnished in connection with such work or operations. General liability coverage can be provided in the form of an endorsement to the Contractor's insurance (at least as broad as ISO Form CG 20 10 11 85 or both CG 20 10 and CG 20 37 forms if later revisions used).

Primary Coverage

For any claims related to this Agreement, the Contractor's insurance coverage shall be primary insurance as respects the County, its officers, officials, employees, and volunteers. Any insurance or self-insurance maintained by the County, its officers, officials, employees, or volunteers shall be excess of the Contractor's insurance and shall not contribute with it.

Notice of Cancellation

Each insurance policy shall state that **c**overage shall not be canceled, except with notice to the County.

Waiver of Subrogation

Contractor grants to the County a waiver of any right to subrogation which any insurer of the Contractor may acquire against the County by virtue of the payment of any loss under such insurance. Contractor agrees to obtain any endorsement that may be necessary to affect this waiver of subrogation, but this provision applies regardless of whether or not the County has received a waiver of subrogation endorsement from the insurer.

Deductibles and Self-Insured Retentions

Any deductibles or self-insured retentions must be declared to and approved by the County. The County may require the Contractor to provide proof of ability to pay losses and related investigations, claim administration, and defense expenses within the retention.

All insurance must be effected under valid and enforceable policies, issued by recognized, responsible insurers qualified to conduct business in Michigan which are well-rated by national rating organizations. All companies providing the coverage required shall be licensed or approved by the Insurance Bureau of the State of Michigan and shall have a policyholder's service rating no lower than A:VII as listed in A.M. Best's Key Rating guide, current edition or interim report.

Claims-made Policies

If any of the required policies provide coverage on a claims-made basis:

1. The retroactive date must be shown and must be before the date of this Agreement or the date the Contractor starts to perform the services.
2. Insurance must be maintained and evidence of insurance must be provided for at least five (5) years after completion of this Agreement.
3. If coverage is canceled or non-renewed, and not replaced with another claims-made policy form with a retroactive date prior to this Agreement's effective date, the

Contractor must purchase "extended reporting" coverage for a minimum of five (5) years after completion of Agreement work.

Verification of Coverage

Contractor shall furnish the County with original certificates and amendatory endorsements or copies of the applicable policy language effecting coverage required by this Exhibit. The County shall receive and approve all certificates and endorsements before the Contractor begins providing services. Failure to obtain the required documents prior to commencement of services shall not waive the Contractor's obligation to provide them. The County reserves the right to require complete, certified copies of all required insurance policies, including endorsements required by this Exhibit, at any time.

Subcontractors

Contractor shall require and verify that all subcontractors maintain insurance satisfying all the stated requirements, and Contractor shall ensure that the County is an additional insured on insurance required from subcontractors.

Special Risks or Circumstances

The County reserves the right to modify these requirements, including limits, based on the nature of the risk, prior experience, insurer, coverage, or other special circumstances.

➢ The Contractor must submit certificates evidencing the insurance to the County Risk Management Division at the time the Contractor executes an agreement with the City, and at least fifteen (15) days prior to the expiration dates of expiring policies.

Surety Bonds

The Contractor shall provide the following surety bonds: 1) bid bond; 2) performance bond; 3) payment bond; 4) maintenance bond. The payment bond and the performance bond shall be in a sum equal to the contract price. If the performance bond provides for a one year warranty a separate maintenance bond is not necessary. If the warranty period specified in the contract is for longer than one year a maintenance bond equal to 10% of the contract price is required. Bonds shall be duly executed by a responsible corporate surety, authorized to issue such bonds in the State of Michigan and secured through an authorized agent with an office in Michigan.

LETTER TO THE LIVONIA CITY COUNCIL

15.

Parks and Recreation
April 29, 2025

MEETING DATE	PRESENTED BY
May 19, 2025 Study	Ted Davis, CPRP, Superintendent of Parks and Recreation

AGENDA ITEM

REQUEST TO APPROVE A SUBLEASE AGREEMENT BETWEEN CITY OF LIVONIA AND MI WORK MATTERS, OPERATORS OF ANASTASIA AND KATIE'S COFFEE SHOP AND CAFE IN LIVONIA: Department of Parks and Recreation, re: for a five year agreement with an option for an additional five years for designated cafe space in the new Senior Wellness Center.

BACKGROUND DETAILS

The Department of Parks and Recreation respectfully requests your concurrence in the proposed Sublease Agreement with MI Work Matters, operators of Anastasia and Katie's Coffee Shop and Café in Livonia.

Under this five-year agreement with an option for an additional five years, MI Work Matters will operate the designated Café space in the new Senior Wellness Center with additional space in the pantry kitchen of the Kirksey Recreation Center. This will allow MI Work Matters to expand its job training program for adults with intellectual and developmental disabilities and provide patrons of both facilities the option to purchase items similar to those in their operation at Anastasia and Katie's.

The Department of Parks & Recreation recognizes the work that Mi Work Matters performs in the community and is excited for the partnership in our new Senior Wellness Center.

PREFERRED COUNCIL RECOMMENDATION/RESOLUTION (Please complete this field. Attachments are not to be used in lieu of the recommendation)

Recommend the Council to authorize the Mayor and City Clerk to execute the attached contract, which has been approved as to form by the City Attorney, on behalf of the City of Livonia.

SPECIFIC NAME OF PRODUCT AND NUMBER TO BE PURCHASED (if more than one)

N/A

CONTRACT: Amount and/or purchase price and length of contract (with dates if applicable)

$200 a month to offset the cost of utilities and $1.00 annually for a term of 5 years beginning September 1, 2025 until August 31, 2030 with one option for an additional period of five years.

DETAILED WORK BEING PERFORMED

N/A

FISCAL CONSIDERATIONS (Amount requested and Account(s) used. If applicable, Grant Funding information)

N/A

ACCEPTANCE OF BID (Please detail the following: Why accepted, why not lowest bidder, company name, contact person, full address)

N/A

REASON TO WAIVE BID PROCESS (Emergency, Professional services, No advantage to City and why, Consortium package, etc): N/A

ATTACHMENTS

1. 2025 MI Work Senior Center Cafe lease agreement

APPROVED BY

Date: April 29, 2025

Ted Davis, CPRP, Superintendent of Parks and Recreation

Date: May 05, 2025

Debra Peck Lichtenberg, CPA, Finance Director

Date: May 09, 2025

Carter Fisher, City Attorney

Date: May 09, 2025

Maureen Miller Brosnan, Mayor

Exhibit A

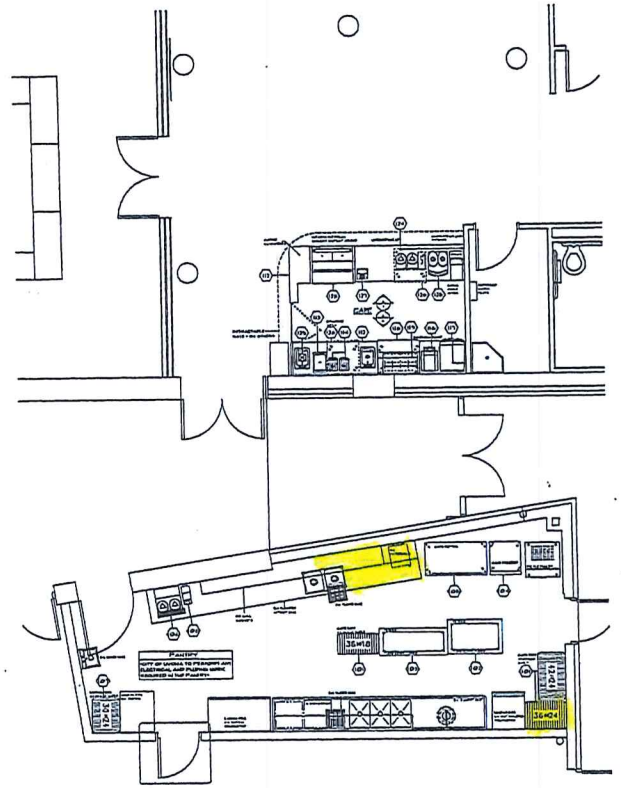

CAFE EQUIPMENT SCHEDULE

ITEM #	QTY	UNITS	CATEGORY	MFR	MODEL	EQUIPMENT REMARKS	SUPPLIED BY
101	1	LOT	DRY STORAGE SHELVING-CAFE	METRO	SUPER ERECTA BRITE		BY CAFE VENDOR
102	1		WORK TABLE	ADVANCE TABCO	SS-304	MOBILE	BY CAFE VENDOR
103	1		WORK TABLE	ADVANCE TABCO	SS-245	MOBILE	BY CAFE VENDOR
104	1		REACH-IN FREEZER	TRUE MFG. - GENERAL FOODSERVICE	T-23F-HC		BY CAFE VENDOR
105	1	LOT	REACH-IN REFRIGERATOR	TRUE MFG. - GENERAL FOODSERVICE	T-49-HC		BY CAFE VENDOR
106	1		COFFEE BREWER	FETCO	CBS-2253-NG (E2253US-UB250-PA110)	W/AIRPOTS	BY CAFE VENDOR
107	1	LOT	DRY STORAGE SHELVING-REC CENTER	METRO	SUPER ERECTA BRITE		
108	1		COFFEE GRINDER	BUNN	22100.0001		BY CAFE VENDOR
109-111			SPARE NUMBER				
112	1		FRONT AND BACK COUNTERS	CUSTOM	CUSTOM MILLWORK	W/ (2) DROP-IN SINKS	BY MILLWORK CONT'R
113	1		DROP-IN ICE BIN	ADVANCE TABCO	D-12-IBL		BY CAFE VENDOR
114	2		BLENDER	VITAMIX	036015-ABAB		BY CAFE VENDOR
115			SPARE NUMBER				
116	1		CONVEYOR TOASTER	HATCO	TC-10		BY CAFE VENDOR
117	1		RAPID COOK OVEN	TURBOCHEF (MIDDLEBY)	BULLET		BY CAFE VENDOR
118	1		SANDWICH / SALAD PREP. REFRIG.	TRUE MFG. - GENERAL FOODSERVICE	TSSU-36-08-HC		BY CAFE VENDOR
119	1		WALL SHELF	CUSTOM			BY CAFE VENDOR
120-123			SPARE NUMBER				
124	1		SNEEZE GUARD	CUSTOM			
125	1		ESPRESSO CAPPUCCINO MACHINE	SCHAERER	COFFEE ART PLUS | TOUCH SCREEN		BY CAFE VENDOR
126	2		UNDERCOUNTER REFRIGERATOR	TRUE MFG. - GENERAL FOODSERVICE	TUC-27-HC		BY CAFE VENDOR
127	1	LOT	CASH REGISTER, POS & PRINTERS	CUSTOM			BY CAFE VENDOR
128	1		OPEN DISPLAY MERCHANDISER	TURBO AIR	TCM-W-40SB-N		BY CAFE VENDOR
129	1		BLENDER CONTAINER RINSER	BLENDTEC	JRE-610		BY CAFE VENDOR

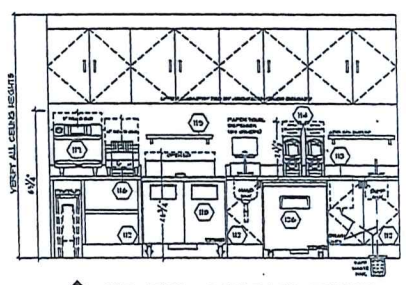

ELEVATION - CAFE BACK COUNTER
SCALE: 1/2"=1'-0"

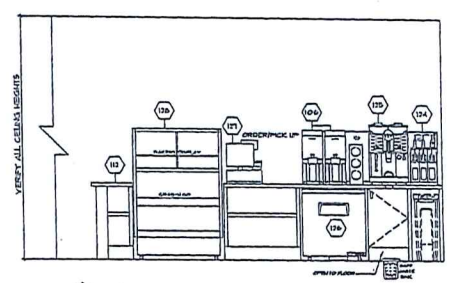

ELEVATION - CAFE FRONT COUNTER
SCALE: 1/2"=1'-0"

REVISED:
11.15.24
11.25.24 MEP'S
12.20.24 JMK
01.23.25 JMK

FOODSERVICE EQUIPMENT
FLOOR PLAN & ELEVATIONS
CAFE

LIVONIA REC
SENIOR CENTER
LIVONIA, MI

DRAWN BY: JMK/PLL
DATE: 10.22.24
CHECKED BY: DGM
SCALE: 1/4" = 1'-0"

MILLIS & ASSOCIATES
Architectural Consultants
15515 Farmington Rd.
Livonia, Michigan 48154
p: 734.513.0313 f: 734.513.0314
www.millisandassociates.com

JOB NO#
2879
SHEET
FSE-8
OF 9

Exhibit B

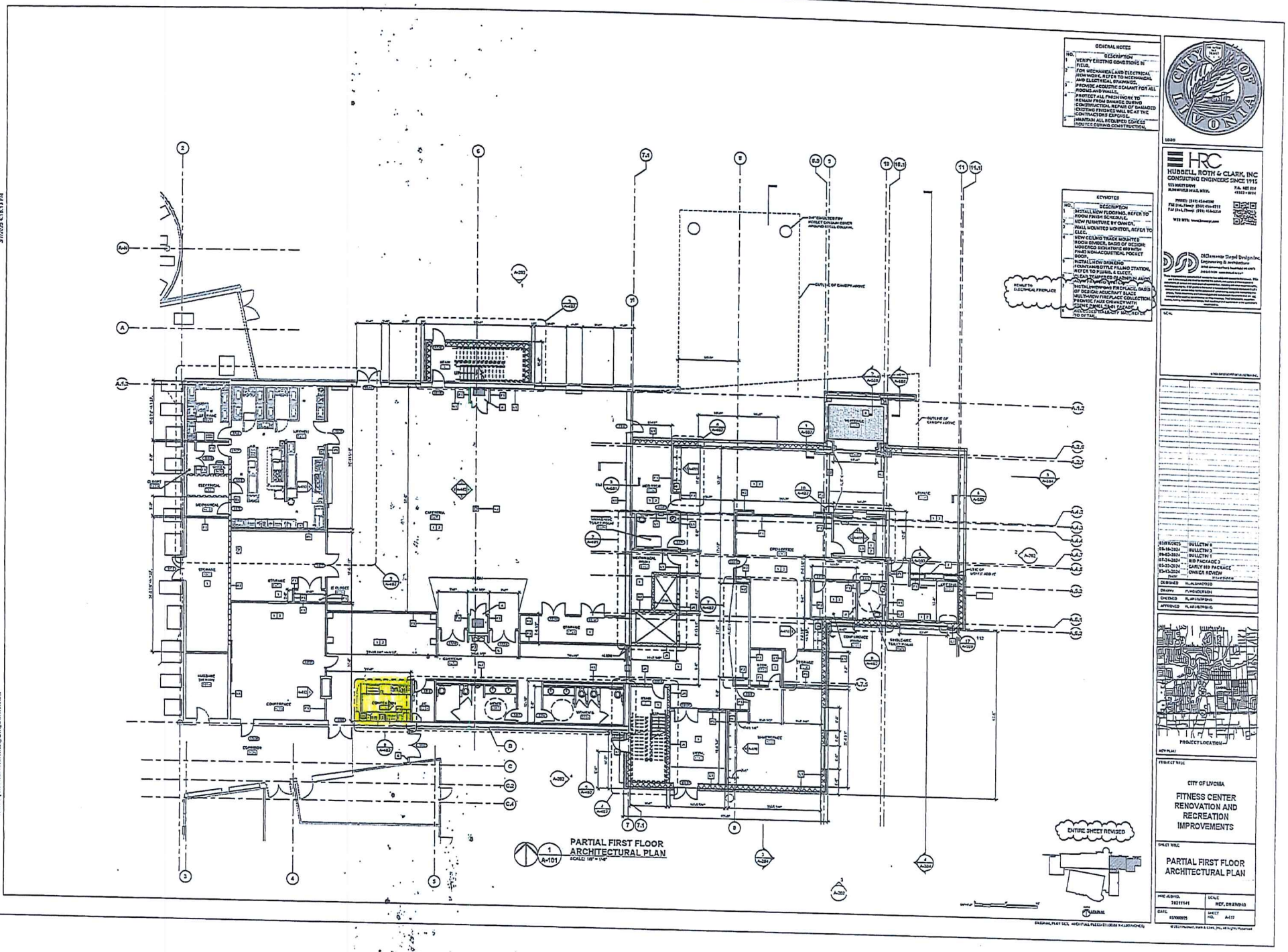
GENERAL NOTES
NO. DESCRIPTION
1 VERIFY EXISTING CONDITIONS IN FIELD.
2 FOR MECHANICAL AND ELECTRICAL NEW WORK, REFER TO MECHANICAL AND ELECTRICAL DRAWINGS.
3 PROVIDE ACOUSTIC SEALANT FOR ALL ROOMS AND WALLS.
4 PROTECT ALL FINISH WORK TO REMAIN FROM DAMAGE DURING CONSTRUCTION. REPAIR OF DAMAGED EXISTING FINISHES WILL BE AT THE CONTRACTOR'S EXPENSE.
5 MAINTAIN ALL REQUIRED EGRESS ROUTES DURING CONSTRUCTION.
KEYNOTES
NO. DESCRIPTION
1 INSTALL NEW FLOORING. REFER TO ROOM FINISH SCHEDULE.
2 NEW FURNITURE BY OWNER.
3 WALL MOUNTED MONITOR. REFER TO ELEC.
4 NEW CEILING TRACK MOUNTED ROOM DIVIDER. BASIS OF DESIGN: MOVECO SONATWIRE 880 WITH FI-NS NON-ACOUSTICAL POCKET DOOR.
5 INSTALL NEW DRINKING FOUNTAIN/BOTTLE FILLING STATION. REFER TO PLUMB. & ELECT.
6 FIELD SCRAPED PLASTER IN AREA SHOWN TO REMAIN.
7 INSTALL NEW WOOD FIREPLACE. BASIS OF DESIGN: ADJUSTCRAFT BLACK MULTI-VIEW FIREPLACE COLLECTION. PROVIDE FAUX CHIMNEY WITH STONE ENCL. SEE FACADE ADJACENT WALL OF WHITE BRICK TO DETAIL.
8 REVISE TO ELECTRICAL FIREPLACE
9 OUTLINE OF CANOPY ABOVE
10 OUTLINE OF WHITE BRICK
11 ENTIRE SHEET REVISED
PARTIAL FIRST FLOOR ARCHITECTURAL PLAN
1 A-101
SCALE: 1/8" = 1'-0"
HRC
HUBBELL, ROTH & CLARK, INC
CONSULTING ENGINEERS SINCE 1915
DiSimone Steel Design Inc.
Engineering & Architecture
BULLETIN 6
BULLETIN 3
BULLETIN 1
BID PACKAGE 3
EARLY BID PACKAGE
OWNER REVIEW
DESIGNED
DRAWN
CHECKED
APPROVED
KEY PLAN
PROJECT LOCATION
PROJECT TITLE
CITY OF LIVONIA
FITNESS CENTER RENOVATION AND RECREATION IMPROVEMENTS
SHEET TITLE
PARTIAL FIRST FLOOR ARCHITECTURAL PLAN
SCALE
REF. DRAWING
DATE
SHEET NO.
A-117

Exhibit C

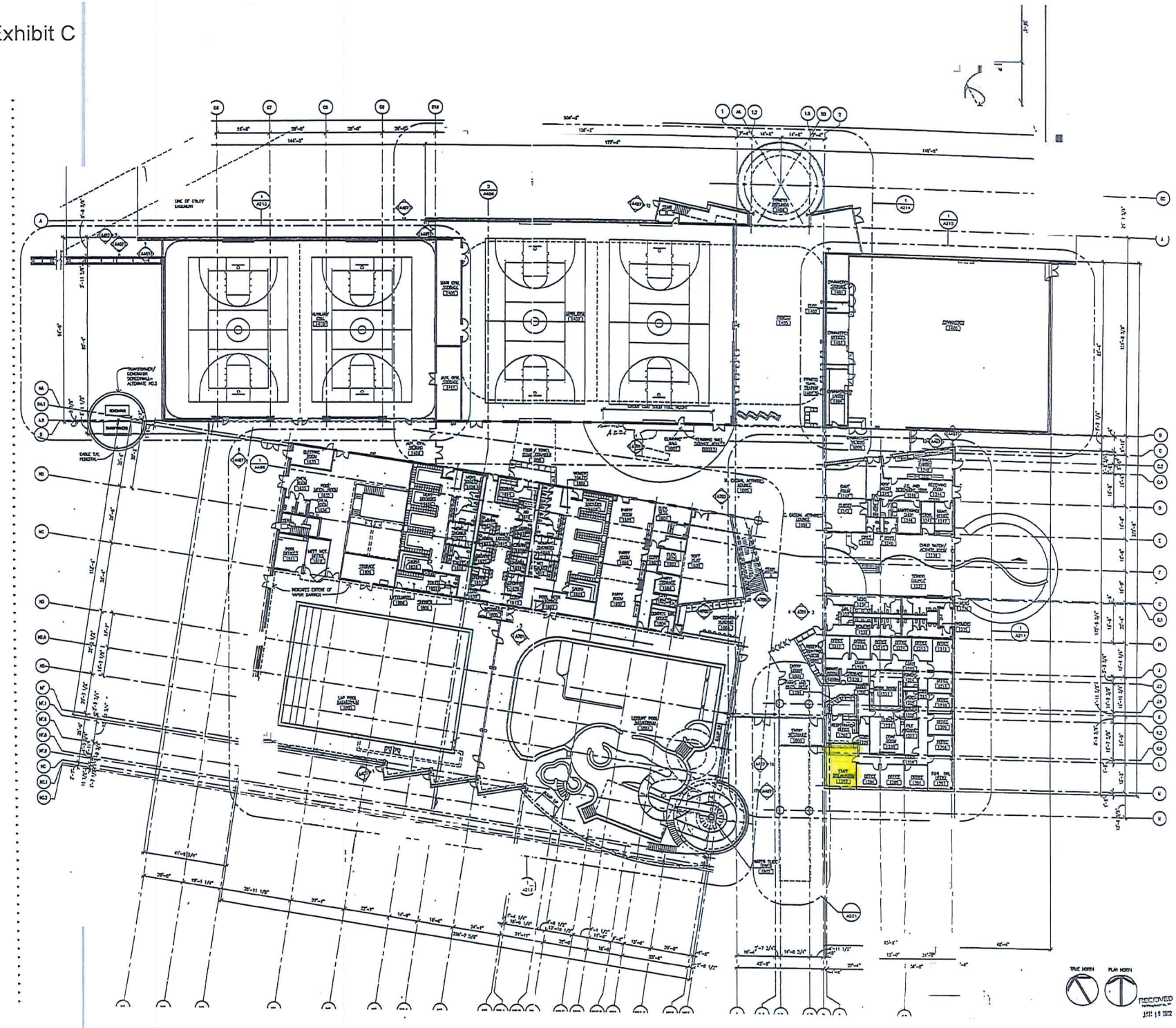

NEUMANN SMITH & ASSOCIATES

Planning
Interior Design

400 Galleria Officentre
Suite 555
Southfield, Michigan 48034

248-352-8310
FAX 248-352-1821
NS@neumannsmith.com

Barker Rinker Seacat ARCHITECTURE

Livonia Community Recreation Center

Livonia, Michigan

As-Built

1-4-2002 - Construction Set
11-19-2001 - Bid Package #6
9-10-2001 - Bulletin #4
8-16-2001 - Bid Package #5
7-19-2001 - Bid Package #4
7-9-2001 - Addendum 3.1 (For Reference)
6-13-2001 - Bidpackage #3 (For Reference)
5-31-2001 - Design Development
3-29-2001 - Bid Packages#2 - Civil (For Reference)

Date 3-29-2001
☐ Preliminary
☐ Construction
☐ Record

Drawn JMS/MJD

Checked JMS

Approved SJG

Do not scale
Use figured dimensions only
Copyright © 2001

Job Number 20095

Title First Floor Plan

Scale: 1/16" = 1'-0"

Sheet A201

TRUE NORTH

PLAN NORTH

RECEIVED JAN 18 2002

LEASE AGREEMENT
SENIOR CENTER CAFE
BETWEEN THE CITY OF LIVONIA

AND

MI WORK MATTERS A NON-PROFIT 501C3

LEASE AGREEMENT
SENIOR WELLNESS CENTER CAFE

TABLE OF CONTENTS

Page

I. NATURE AND OPERATION OF THE SUBLEASE. 6

1.1 General Description of the Lease. 6

1.2 Area of Lease. 6

1.3 Term. 7

1.4 Renewal of Term. 7

II. OBLIGATIONS OF TENANT. 7

2.1 Quality. 7

2.2 Prices. 8

2.3 Service and Hours of Operation. 9

2.4 Supervisor. 9

2.5 Employees of Tenant. 10

2.6 Inspection. 10

2.7 Access to Premises. 11

2.8 Nondiscrimination. 11

2.9 Taxes. 12

III. DUTIES AND RESPONSIBILITIES OF THE PARTIES. 12

3.1 Operational Name. 12

3.2 Present Condition of Premises. 12

3.3 Interior Decoration. 13

3.4 Tenant's Repairs and Maintenance. 13

3.6 Signs, Advertising, and Mechanical Devices. 14
3.7 Maintenance of Equipment. 14
3.8 Major Improvements. 15
3.9 Trash and Garbage. 15
3.11 Insurance Coverage. 16
3.12 Insurance Coverage by Landlord. 17
3.13 [Reserved]. 18
3.14 Redelivery. 18
3.15 Additional Equipment and Furnishing. 18
IV. PAYMENT TERMS. 19
4.1 Costs Borne by Tenant. 19
4.2 Cost of Utilities. 20
4.3 Rental Payments by Tenant. 20
4.4 Security Deposit. 21
4.5 Records Available. 22
4.6 Right of Review. 22
4.7 Penalty. 22
V. ADDITIONAL TERMS OF AGREEMENT. 23
5.1 Section Headings. 23
5.2 Invalid Provisions. 23
5.3 Assignment and Subletting. 23
5.4 Default. 24
5.5 Non-waiver. 24
5.6 Notices. 24
5.7 Termination by Landlord. 25

5.8 Termination by Tenant. 25

5.9 Compliance with Laws. 26

5.10 Underwriter Requirements. 26

5.11 Hold Over Tenancy. 26

5.12 Reentry Expenses. 27

5.13 Continuing Liability. 27

5.14 Unrestricted Use Upon Termination. 27

5.15 Cumulative Remedies. 27

5.16 Non-partnership. 28

5.17 Succession. 28

5.18 Peaceful Enjoyment. 28

LEASE AGREEMENT
SENIOR WELLNESS CENTER CAFE

THIS LEASE AGREEMENT made and entered into this 1st day of September 2025, by and between the CITY OF LIVONIA, a Michigan municipal corporation, whose address is 33000 Civic Center Drive, Livonia, MI 48154, the Lessor, hereinafter designated as the "LANDLORD," and MI Work Matters, a not for profit charity whose mission is to improve job skills and to increase employment opportunities for adults with Intellectual and Developmental Disabilities "I/DD" hereinafter designated as the "TENANT."

WITNESSETH:

WHEREAS, the City of Livonia is the owner of the Café at the Livonia Senior Wellness Center, whose address is 15100 Hubbard, Livonia, Michigan 48154, hereinafter referred to as the "CAFE," and is vested with authority to lease or contract for the use of said Cafe with persons, companies or corporations; and

WHEREAS, the Cafe shall contain facilities designed for and capable of providing food and beverage services for the general public and patrons of the Senior Wellness Center and Jack E. Kirksey Recreation Center; and

WHEREAS, the Tenant represents itself to be capable of serving food and beverages of high quality and desires to obtain exclusive rights to furnish food and beverage service at the Cafe; and

WHEREAS, the Landlord is agreeable to granting the Tenant exclusive rights to engage in food and beverage operations as part of Tenant's public charitable purposes at the Cafe; and

WHEREAS, it appears that it would be mutually beneficial and advantageous for the parties to enter into a lease agreement encompassing the maintenance and operation of the Cafe.

NOW, THEREFORE, in consideration of the covenants hereinafter set forth, the respective parties do hereby enter into a Lease Agreement upon the following terms and conditions, to wit:

I. NATURE AND OPERATION OF THE SUBLEASE.

1.1 General Description of the Lease.

Tenant shall have the exclusive right and privilege of serving food and beverages, as well as engaging in Cafe operations in the Senior Wellness Center and the Jack E. Kirksey Recreation Center. Tenant shall use and occupy the leased premises only for the purpose for which they are let to it.

1.2 Area of Lease.

Tenant agrees that the area of its operation hereunder shall be confined to the Café area of the facility and shared use of the adjacent prep kitchen to include use of the 3 compartment sink, ice machine, designated storage, and pantry kitchen within the Jack E. Kirksey Recreation Center, as well as such areas of the Landlord-controlled premises as reasonably needed to access the Leased Area and to operate the Cafe area (collectively, all such space is the "Leased Area"). The Leased Area is further described in the attached Exhibits A and B.

It is hereby expressly understood and agreed by the parties hereto that the Cafe is surrounded by the Livonia Senior Wellness Center and Jack E. Kirksey Recreation Center which is operated by and under the jurisdiction of the Landlord.

The parties hereto expressly understand and agree that this Lease does not include the Senior Wellness Center Kitchen or any other areas of the facility not expressly mentioned in this agreement.

1.3 Term.

The initial term hereof shall commence on September 1, 2025 and end on August 31, 2030.

1.4 Renewal of Term.

Landlord hereby gives and grants to Tenant, so long as Tenant is not in default hereunder, one (1) successive option to renew this Lease for an additional period of five (5) years each, upon the same terms, conditions and covenants as herein contained except as otherwise specified in this agreement and any amendment hereto.

Tenant must notify Landlord, in writing, of its intent to exercise the option(s) at least ninety (90) days prior to the expiration of each term of this Lease.

II. OBLIGATIONS OF TENANT.

2.1 Quality.

Tenant agrees that it is the intent of the parties hereto that the Café shall serve and dispense quality food service and beverages with adequate portions, and shall be of the kind usually expected of a high quality cafe and coffee establishment. Tenant agrees and covenants to perform its obligations under this Lease and any and all other activities and contracts made in connection therewith with all due regard to the aforesaid intent, and agrees to act in utmost good faith with the Landlord in the performance of all operational activities connected with the Cafe.

Tenant shall furnish good, prompt and efficient service adequate to meet the demands for its service at the facilities which are the subject of this Lease.

Tenant shall maintain upon the premises a substantial stock of food, beverages and equipment so as to provide the service usually expected of a high-quality cafe and coffee establishment.

The general selection of food and beverages offered for sale, and its quality and portions shall be subject to the reasonable approval of the Landlord prior to the beginning of operations, and at any time thereafter.

Tenant shall, at all times, comply with the Federal Pure Food and Drug Laws and other applicable laws and regulations of the United States, the State of Michigan, County of Wayne and the City of Livonia, and all applicable health rules and regulations.

Tenant recognizes that it is required to provide its services to patrons using the Senior Wellness Center, persons using the facilities of Jack E. Kirksey Recreation Center, as well as to other patrons and customers of the Cafe.

2.2 Prices.

Foods and beverages offered for sale by Tenant shall be sold at prices comparable to those maintained at other high-quality cafes and coffee shops in the metropolitan Detroit area.

Tenant shall charge fair, reasonable and nondiscriminatory prices for each unit of sale or service, provided that Tenant may be allowed to make reasonable and nondiscriminatory discounts, rebates, and other similar types of price reduction to customers or guests who purchase in volume which shall, in general, comply with

customary practice in the Cafe or coffee shop business, but taking into account differences related to Tenant's unique non-profit/public charitable operations.

2.3 Service and Hours of Operation.

Tenant's service shall be prompt, clean, courteous and efficient and at all times provide personnel sufficient to operate the facilities on a standard equal to that maintained by comparable cafes and coffee shop operations.

Tenant shall keep the Cafe open and available for Café activity during all reasonable days and hours for such operations except when prevented from doing so by strikes, fire, casualty, or other cause beyond the Tenant's reasonable control and except during reasonable periods of time necessary for repairing, cleaning and decorating the premises. Operations shall coordinate with the operations of the Senior Wellness Center schedule of Monday-Friday 8:30 a.m. – 5:00 p.m..

Tenant shall be responsible for all deliveries for the operation. Deliveries can be received in the Landlord's Receiving Area adjacent to the shared Pantry.

Notwithstanding the general provisions with regard to hours of operation contained in the foregoing paragraph, Tenant shall keep the Cafe open for food and beverage service throughout the year on a mutually agreed upon schedule by the parties.

2.4 Supervisor.

Tenant shall at all times provide an active, qualified and competent supervisor who shall be authorized to represent and act for Tenant in matters pertaining to the day-to-day operation of the Cafe.

2.5 Employees of Tenant.

All employees of Tenant shall be clean, courteous, efficient and neat in appearance. Tenant shall not employ any person or persons in or about the Cafe who shall use improper language or act in a loud or boisterous or otherwise improper manner. Tenant's employees will enter/exit the facility through the Senior Wellness Center entrance. Employee breaks will be taken in the Staff lounge, located in the Jack E. Kirksey Recreation Center (Exhibit C).

Upon written notification by the Landlord to Tenant that a person employed by Tenant is, in the Landlord's opinion, disorderly, unsanitary, or otherwise unsatisfactory, Tenant shall immediately remedy the situation to the Landlord's reasonable satisfaction, and failing that, the employee shall be removed from service at the Cafe and shall not again be trained or employed by Tenant without consent of the Landlord, except when this would not be under Tenant's control by reason of Union agreement or law.

2.6 Inspection.

Tenant shall allow the Landlord's authorized representatives, as designated in writing, access to the premises to be occupied by Tenant under the terms of this Lease at all reasonable hours for the purpose of examining and inspecting said premises for purposes necessary, incidental to or connected with the performance of Tenant's obligations hereunder, or in the exercise of Landlord's governmental functions.

Tenant agrees that the Landlord's Superintendent of Parks and Recreation, or his/her authorized agent, as designated in writing, is authorized, at any time, to inspect Tenant's operation for cleanliness, condition of equipment, quantity and quality of food, prices, service and hours of operation. If any of the foregoing are deemed unsatisfactory,

the Superintendent of Parks and Recreation shall notify Tenant, in writing, to correct any unsatisfactory conditions. Such written notice shall contain specific particulars so as to adequately advise Tenant of the conditions deemed unsatisfactory and the reasons and grounds for such conclusion. Tenant shall take immediate steps to correct any such unsatisfactory condition.

Continued violation of the provisions of this clause by Tenant shall constitute sufficient grounds for the termination of this Lease Agreement.

2.7 Access to Premises.

It is understood that generally Tenant will occupy the Cafe as hereinbefore designated. Tenant and its employees and representatives shall also have access to the Leased Area as defined above. Landlord shall provide locked storage cabinets in the pantry area accessible only by Tenant and its designees, except that Landlord may designate a keyholder with access in case of or emergency or other unusual circumstances. Tenant, its employees and customers shall be entitled with others to the use of the adjoining parking lots. Should a question or dispute arise concerning the use of these parking lots, the parties shall utilize their best efforts to resolve such dispute in a manner appropriate to implementing the intent and purpose of this Lease Agreement while minimizing the inconvenience to others entitled to use of such parking lots. Landlord shall be responsible to provide a means by which Tenant can securely lock and limit access to the Café area during non-operational hours.

2.8 Nondiscrimination.

Tenant shall provide its services on a fair, equal and nondiscriminatory basis to all patrons thereof. Tenant shall not discriminate or permit discrimination on the basis of

race, sex, religion, national origin or disability whether they be customers, employees, suppliers, vendors or contractors of Tenant.

2.9 Taxes.

Subject to section 4.1 and any rights of exemption and appeal provided by federal, state, or local law, Tenant hereby agrees to pay all taxes and assessments that may be levied against the Cafe, including, but not limited to, all real property, equipment and property owned by the Landlord, except that Tenant will not be responsible for any new tax resulting from sale of the Cafe by Landlord.

III. DUTIES AND RESPONSIBILITIES OF THE PARTIES.

3.1 Operational Name.

Tenant shall not be restricted to the use of the name "Senior Wellness Center"; a part of the name of the Cafe at the Tenant's option.

3.2 Present Condition of Premises.

Tenant agrees that it has examined the designs premises prior to its execution of this Lease, is familiar that the café portion is new construction and the prep kitchen is existing and examined and is taking possession "as is." Tenant agrees that its taking of possession shall constitute conclusive evidence that the premises were in satisfactory condition at the time Tenant took possession hereunder. Tenant agrees that no promise to alter, remodel, improve, repair, decorate, or clean the premises or any part thereof, and no representation respecting the condition of the premises or the Cafe has been made by Landlord.

3.3 Interior Decoration.

Tenant agrees that it will adopt and use decorating schemes and motifs in harmony with the design and architectural treatment of the Cafe and will submit any proposed decoration plans to the Superintendent of Parks and Recreation for written approval before installation or decoration, which approval shall not be unreasonably withheld. Any and all interior decorating of those portions of the premises described as being under the exclusive custody and control of Tenant shall be undertaken and accomplished at Tenant's sole cost and expense.

3.4 Tenant's Repairs and Maintenance.

Subject to the provisions of this Lease, Tenant shall, during the term, at Tenant's own expense, maintain the interior of the premises in good order, condition and repair, limited to the point of connection with the Building Systems (as defined below). Tenant shall leave the Café area at close of operations for the day in broom clean condition and shall operate the Café area free from hazards during operational hours. Tenant is responsible for statutory inspection, testing and repairs related to use or occupancy. Documentation must be provided to the City on an annual basis. All work contracted by Tenant must be performed by a qualified licensed contractor, registered to perform that work within the City. Tenant shall not be responsible for repair and maintenance, except as specified and shall not be responsible to the extent of Landlord's responsibility below.

3.5 Landlord's Repairs and Maintenance.

The Landlord shall be responsible for outside repairs and maintenance, including the foundation, exterior walls, roof, landscaping and parking lot. Landlord shall also be responsible for construction, repair, alteration, and maintenance in good working order of

all of the following: electrical, mechanical, plumbing, heating, ventilating, air conditioning, exhaust fan, sprinkler, life safety or security systems serving the building, including any required routine maintenance or testing associated therewith, interior walls, flooring, and structural supports (collectively referred to herein as the "Building Systems").

3.6 Signs, Advertising, and Mechanical Devices.

No signs, posters, advertising devices, amusement devices, or mechanical devices may be erected or installed by the Tenant without the prior written approval of the Landlord, and the Landlord reserves the right to make final determination as to the propriety of any requested sign, poster, advertising or amusement device, including vending machines.

3.7 Maintenance of Equipment.

Tenant agrees, at all times, to maintain and keep in good operating condition, at Tenant's sole expense, the equipment furnished by the Landlord and used by the Tenant in its Cafe operations, a list and description of such equipment being attached hereto as Exhibit A. To the extent the Landlord furnishes equipment exceeding a fair market value of $2,500.00, Landlord and Tenant shall meet and confer concerning responsibility for replacement or for repairs exceeding 50% of the fair market value.

The Landlord represents that all equipment furnished by Landlord is in good operating order as of the date hereof. Any other equipment installed by Tenant shall be made at Tenant's sole cost and expense and shall be installed in compliance with all applicable building codes and health rules and regulations. All such other equipment installed by Tenant shall be of high quality, safe, and modern in design and shall harmonize with the equipment furnished by the Landlord to the extent possible. Tenant

shall supply the Superintendent of Parks and Recreation with a list of all equipment installed by it in theCafe, which list shall describe such equipment with particularity. Tenant is responsible to ensure that any equipment installed, changed or added is compatible with the existing Building Systems.

All equipment of any kind whatsoever which may be installed by the Tenant as a replacement for equipment initially furnished by the Landlord shall, after its installation, be and remain the property of the Landlord. The foregoing shall not be interpreted as requiring capital investment by the Tenant. All other property and trade fixtures shall be and remain the property of the Tenant except those trade fixtures installed in the premises in a manner that makes them not removable without substantially damaging the premises.

3.8 Major Improvements.

Significant improvements of a permanent nature shall be made only after the Tenant submits detailed plans and specifications to the Landlord, who shall have the right to approve or disapprove them, in whole or in part. All such improvements, upon being made, shall become the property of the Landlord.

3.9 Trash and Garbage.

At its sole cost and expense, the landlord shall provide a suitable method for adequate sanitary handling and disposal of all trash, garbage, and other refuse generated due to the Tenant's operations. The Tenant will be responsible for removing trash generated from the Café operation to an interior trash receptacle or an exterior dumpster as agreed to by the parties.

3.10 Damages to Premises.

Tenant shall be responsible for damage to the premises, including the glass breakage, caused by the negligent acts of its agents, employees, patrons, or other persons under its direction and control.

Suppose the premises occupied by Tenant are partially damaged by fire, explosion, the elements, the public enemy, or other casualty not caused by negligent acts of Tenant or its agents, employees, patrons, or other persons under its direction and control but are not rendered untenantable. In that case, the Landlord shall repair the same using insurance proceeds or such other funds as may be available.

Suppose the damage shall be so extensive as to render such premises wholly untenantable. In that case, the Lease shall be deemed terminated by operation of law, and the Landlord shall be under no obligation to repair and reconstruct the premises.

The Landlord and the Tenant mutually agree that each shall forfeit any right of action that either may later acquire against the other for loss or damage to the property of the other or to property in which either party may have an interest, where Tenant's insurance covers such loss.

3.11 Insurance Coverage.

The Tenant, at its sole cost and expense, shall provide insurance as follows:

a) General Liability. The Tenant shall provide adequate insurance during the term of this Agreement, which meets with the approval of the Landlord, covering liability to the public for loss resulting from injury to persons or damage to property arising out of or caused by its operations, acts or omissions, or those of its agents or employees. Such insurance coverage shall be in such amounts as shall be adequate to protect the public, the

Tenant, the Landlord and its officers, agents and employees, and all parties in interest, and shall be not less than One Million Dollars ($1,000,000) in respect to death or injury to any one person, and One Million Dollars ($1,000,000) about any one occurrence in the case of public liability, and shall not be less than One Million Dollars ($1,000,000) in respect to any one occurrence of property damage.

b) [Reserved].

c) Contractual Insurance. As part of the insurance coverage to be provided by the Tenant, the contractual exclusion shall be removed by endorsement, or in the alternative, contractual insurance shall be afforded. If the former, such endorsement shall contain specific language as follows:

> It is hereby agreed that the contractual exclusion does not apply to the contract entered into between the insured and the City of Livonia.

d) Worker's Compensation Coverage Insurance.

The Tenant shall carry Worker's Compensation Coverage as required by the laws of the State of Michigan.

e) Certified Copies. The Tenant shall file a certified copy of the required insurance policies with adequate endorsements with the Landlord when this Agreement is returned for execution. A guarantee of at least twenty (20) days' notice to the Landlord before the cancellation of and/or change in any insurance policy shall be endorsed and noted on each such policy.

3.12 Insurance Coverage by Landlord.

The Landlord shall provide insurance as follows:

a) The landlord shall provide insurance against fire and other losses to the building and its contents.

b) Landlord shall provide its own public liability and property damage insurance covering liability to Tenant and third persons for acts of the Landlord.

3.13 [Reserved].

3.14 Redelivery.

Tenant will make no unlawful or offensive use of said premises and will, at the expiration of the term hereof or upon any earlier termination thereof, as hereinafter provided, quit and deliver said premises to the Landlord. Those having their estate in the premises, peaceably, quietly, and in as good order and condition as the same now are or may hereafter be placed by the Tenant or the Landlord.

3.15 Additional Equipment and Furnishing.

The Landlord or its authorized representative must first approve equipment and furnishings installed by the Tenant in the Cafe. Equipment and furnishings that have already been approved are included on Exhibit A._The Exhibit may be amended occasionally by a duly authorized Tenant Representative and the Superintendent of Parks and Recreation or his/her designee. The tenant may repair and replace such equipment and fixtures without advance approval or notice so long as the type of equipment and fixtures are substantially similar and the repair/replacement will not unreasonably disrupt the Landlord's business.

Tenant covenants and agrees that it will not sell, convey, mortgage, pledge, or otherwise dispose of any of the equipment or furnishings installed on the Cafe premises,

which are the property of the Landlord, without the consent, in writing, of the Landlord, which approval shall not be unreasonably withheld.

Upon termination of this Agreement, whether by expiration, mutual agreement, or by default of one of the parties, the additional equipment installed and owned by the Tenant shall be disposed of as follows:

a) The Landlord may require the Tenant to remove such equipment and furnishings from the building or

b) The Landlord and the Tenant may establish a value by mutual agreement, and the Landlord may purchase any or all of such equipment at the price mutually agreed upon or

c) If no agreement can be reached, and the Landlord still desires to retain the equipment, then the parties shall establish a value by appointing three qualified appraisers. One such appraiser shall be appointed by the Landlord, one by the Tenant, and the third by the two so appointed. The value so determined by appraisal shall be binding upon the parties. The appraisal cost shall be borne equally by the Landlord and the Tenant.

IV. PAYMENT TERMS.

4.1 Costs Borne by Tenant.

Tenant shall bear, at its own expense, all costs of its operations, including all taxes and assessments that may be levied against the leased premises, including, but not limited to, equipment and personal property owned by the Landlord; provided, however, that Tenant shall be entitled to avail itself of any applicable exemptions from property taxes for which Tenant qualifies, including but not limited to exemptions for public

charities, exemptions for small operations, or other exemptions provided for under Michigan law.

Tenant shall pay for and obtain all permits and licenses required by authority of law in connection with its operations .

4.2 Cost of Utilities.

Tenant shall pay a monthly stipend to offset the cost of utilities incurred at the Livonia Senior Wellness Center. This amount shall be $200/month, payable before the first day of each month if the parties agree that separate utility metering should be installed to replace the present metering system. The Tenant shall bear the full cost of installing the separate utility metering. Thereafter, the Tenant shall pay for all heat, gas, water, and electricity used in that portion of the Senior Wellness Center occupied by the Tenant.

4.3 Rental Payments by Tenant.

Tenant, in consideration of this Agreement, hereby covenants and agrees to pay to the Landlord the following sums, to wit:

a) The initial yearly rental shall cover September 1, 2025, through August 31, 2026, and for each subsequent year, beginning September 1 and ending August 31 (the fiscal year). The initial lease term shall end on August 31, 2030. The rent shall be payable before the first day of each year of the term for $1 annually.

b) In no event shall the rental provided initially to be paid under this Lease be reduced without the approval of the Mayor and City Council.

c) All rental payments or other sums to be made to the Landlord shall be made at such place as the Landlord shall designate in writing from time to time. The Tenant hereby hires the premises for the said term as specified herein and covenants well and indeed to pay or cause to be paid unto the Landlord at the abovementioned dates and times, the payments above reserved.

4.4 Security Deposit.

The Landlord herewith acknowledges receipt of One Thousand Dollars ($1,000.00), which it is to retain as security for the faithful performance of all of the covenants, conditions, and agreements of this Lease, but in no event shall the Landlord be obliged to apply the same upon the rents or other charges in arrears or upon damages for the Tenant's failure to perform the said covenants, conditions, and agreements; the Landlord may so apply the security at its option; and the Landlord's right to possession of the premises for nonpayment of rent or any other reason shall not, in any event, be affected because the Landlord holds this security. The said sum, if not applied toward the payment of rent in arrears or toward the payment of damages suffered by the Landlord because the Tenant breached the covenants, conditions, and agreements of this Lease, is to be returned to the Tenant when this Lease is terminated, according to these terms, and in no event is the said security to be returned until the Tenant has vacated the premises and delivered possession to the Landlord.

During a calendar year, should any of the security deposit be used by the Landlord in the manner above specified, then and in that event, the Tenant agrees to make such annual payments to the Landlord as may be necessary to maintain the security deposit for One Thousand Dollars ($1,000.00).

Suppose the Landlord repossesses itself of the said premises because of the Tenant's default or because the Tenant fails to carry out the covenants, conditions, and agreements of this Lease. In that case, the Landlord may apply the said security upon all damages suffered to the date of said repossession and may retain the security to use upon such damages as may be suffered or shall accrue thereafter because of the Tenant's default or breach. The Landlord shall not be obliged to keep the security as a separate fund but may mix it with its own funds.

4.5 Records Available.

Tenant hereby agrees that the Landlord shall have all financial information, including financial statements for Tenant's activities at the Cafe, the Annual Sales Tax Return submitted by the Tenant to the State of Michigan, the Annual Employment Tax Returns submitted by the Tenant to the Internal Revenue Service, and supporting documents such as canceled checks to establish proof of payment for all Federal and State tax liabilities, which would be necessary or proper in an audit of Tenant's operations at the Cafe to prevent tax liens from attaching to any portion of the Premises. Such documentation shall be made available for review by the Landlord within ninety (90) days from December 31st of each year.

4.6 Right of Review.

The landlord shall have the right to review Tenant advertising, hours of operation, menus, and prices.

4.7 Penalty.

Any installments of rent accruing hereunder and any other sum payable hereunder by Tenant to the Landlord not paid within ten (10) days after the same shall be due shall

bear interest at the rate of one percent (1%) per month from said tenth (10th) day until the same is paid in full.

V. ADDITIONAL TERMS OF AGREEMENT.

5.1 Section Headings.

The section headings contained herein are for convenience in reference and are not intended to define or limit the scope of any provision of this Agreement.

5.2 Invalid Provisions.

If any provision herein contained is held invalid by any court of competent jurisdiction, the invalidity of such provision shall not affect the remainder of this Agreement.

5.3 Assignment and Subletting.

Tenant shall not assign, transfer, sublease, pledge, hypothecate, surrender, or otherwise encumber or dispose of any interest arising under this Agreement or any estate created by this Agreement, or any interest in any portion of the same, including transfer or sale of more than 49% of any ownership interest by the original members of tenant, or permit any other person or persons, company or corporation to occupy these premises, without the prior written consent of the Landlord, which consent shall not be unreasonably withheld.

All the covenants, stipulations, and agreements in this Agreement shall extend to and bind the legal representatives, successors, and assigns of the respective parties hereto.

5.4 Default.

It is mutually agreed that if Tenant shall neglect or fail to pay any amounts due promptly and owing as specified in this Agreement, and if such failure continues for a period over thirty (30) days from the due date, then this Agreement shall at the option of the Landlord, be subject to cancellation and become void and of no further force or effect and the rights of Tenant shall forthwith be terminated hereunder.

It is further agreed that should Tenant be adjudicated bankrupt, according to law, or become insolvent, this Agreement shall become void and of no further force or effect, and the rights of Tenant shall forthwith be terminated hereunder.

5.5 Non-waiver.

Any waiver of any breach of covenant contained to be kept and performed by Tenant shall not be deemed or considered a continuing waiver and shall not operate to bar or prevent the Landlord from declaring a forfeiture for any succeeding breach of any condition or covenant.

5.6 Notices.

Whenever under this Lease provision is made for notice of any kind, it shall be deemed sufficient notice and service thereof if such notice to the Tenant is in writing addressed to the Tenant at its last known post office address or at the Leased premises and deposited in the mail with postage prepaid, and if such notice to the Landlord is in writing addressed to the last known post office address of the Landlord and deposited in the mail with postage prepaid. Notice needs to be sent to only one Tenant or Landlord where the Tenant or Landlord is more than one person.

5.7 Termination by Landlord.

The Landlord shall have the right, upon thirty (30) days, written notice to the Tenant, except under subsections a), b), c), and d) hereof, in which cases such notice shall be seven (7) days, to terminate this Agreement at any time after the occurrence of any one or more of the following events:

a) Nonpayment of any fees required hereunder.

b) Institution of voluntary or involuntary bankruptcy by or against the Tenant.

c) Assignment by Tenant for the benefit of creditors.

d) The abandonment by the tenant and discontinuance of operations are hereunder.

e) Failure to pay Federal, State, and local taxes as they become due.

f) Nonperformance of any covenant of this Agreement, excluding subsections a), b), c), d), and e) above, and failure of the Tenant to remedy such breach for sixty (60) days after the receipt of written notice from the Landlord of the existence of such breach.

g) If the Tenant becomes permanently deprived of the rights, powers, and privileges necessary to the proper conduct and operation of the facilities specified in this Agreement, or in the event the Tenant is convicted of a felony.

5.8 Termination by Tenant.

The Tenant shall advise the Landlord of any breach of the terms, covenants, or conditions of this Agreement, and the Landlord shall remedy the alleged breach of contract within sixty (60) days after receipt of written notice from the Tenant. In the event

the Landlord fails to remedy such breach within such period, the Tenant shall have the right, upon thirty (30) days notice to the Landlord, to terminate this Agreement in the event the Landlord breaches any of the terms, covenants, or conditions herein contained.

5.9 Compliance with Laws.

The tenant hereby agrees to maintain the premises according to all police, sanitary, and other regulations imposed by any governmental authority.

5.10 Underwriter Requirements.

Tenant hereby agrees to observe all reasonable regulations and requirements of underwriters concerning the use and condition of the leased premises tending to reduce fire hazards and insurance rates and further agrees not to permit nor allow any rubbish, waste material, or products to accumulate on the leased premises.

5.11 Hold Over Tenancy.

Tenant hereby agrees that in the event it shall hold over after the expiration of the term demised for a sufficient period to create a renewal of this Lease by operation of law, any renewal or future right of possession not evidenced by an instrument in writing, executed and delivered by the Landlord, shall be a tenancy from calendar month to calendar month and for no longer term, subject to monthly rent increases.

If this Lease is renewed by holding over, the landlord must give one month's notice to recover possession or the Tenant if he desires to surrender; otherwise, the Tenant shall be liable for a month's rent after vacating or pro rata if the premises are re-rented before the expiration of the month in which the tenant vacates the premises.

5.12 Reentry Expenses.

If the Landlord shall, during the period covered by this Lease, obtain possession of the leased premises by reentry, summary proceedings, or otherwise, the Tenant hereby agrees to pay the Landlord the expense incurred in obtaining possession of the leased premises and also all costs and commissions which may be paid in and about the letting of the same, and all other damages including attorney fees and court costs.

5.13 Continuing Liability.

It is mutually understood and agreed that in the event this Lease is terminated or the Landlord repossesses itself of the premises because of the default of the Tenant, the Tenant shall not be released from liability under this Lease by reason thereof. Tenant shall pay to the Landlord all damages sustained by reason of the default of the Tenant in failing to carry out the terms of this Lease. All obligations of the Tenant not performed by the Tenant shall bear interest at the rate of one percent (1%) per month from the date of such termination or repossession until the same is paid in full.

5.14 Unrestricted Use Upon Termination.

Tenant hereby agrees that upon termination of this Lease at any time or for any cause, the Landlord shall have the unrestricted use of the subject property for any purpose and without any limitation whatsoever.

5.15 Cumulative Remedies.

It is agreed that every one of the rights, remedies, and benefits provided by this Lease shall be cumulative and shall not be exclusive of any other of said rights, remedies, and benefits or of any other rights, remedies, and benefits allowed by law.

5.16 Non-partnership.

Nothing herein contained shall create or be construed as creating a co-partnership between the Landlord and the Tenant or to constitute the Tenant as an agent of the Landlord.

5.17 Succession.

The covenants and conditions herein contained shall bind the heirs, representatives and assigns of the Landlord and the Tenant and if more than one join in the execution hereof as Landlord or Tenant, the liability will be joint and several, or if they or either of them be of feminine sex, or a corporation, such words and the pronouns and other relative words shall be read as if written in the plural, feminine and neuter, respectively.

5.18 Peaceful Enjoyment.

The Landlord covenants that the said Tenant, on payment of all of the aforesaid installments and performance of all the covenants aforesaid, shall and may peacefully and quietly have, hold, and enjoy the said demised premises for the term aforesaid.

IN WITNESS WHEREOF, the parties hereto have hereunto set their hands and seals the day and year first above written.

In the Presence of:

_____

_____

LANDLORD: CITY OF LIVONIA, a Michigan Municipal Corporation

By: _____

Maureen Miller Brosnan, Mayor

and _____

Lori Miller, City Clerk

STATE OF MICHIGAN)
) ss.
COUNTY OF WAYNE)

On this _____ day of _____, 2025, before me, a Notary Public in and for said County, personally appeared **Maureen Miller Brosnan** and Lori Miller, to me personally known, who being by me duly sworn did say that they are the Mayor and the City Clerk, respectively, of the City of Livonia, and that the seal affixed to said instrument is the corporate seal of said municipal corporation, and that said instrument was signed and sealed in behalf of said municipal corporation by authority of a resolution of its City Council, and said officers acknowledged said instrument to be the free act and deed of said municipal corporation.

_____

Notary Public, Wayne County, Michigan
My commission expires:
Acting in Wayne County

TENANT: MI WORK MATTERS

_____ By: _____

_____

STATE OF MICHIGAN)
) ss.
COUNTY OF WAYNE)

The foregoing instrument was acknowledged before me this _____ day of _____, 20___, by _____, _____, and _____ of _____, on behalf of said corporation.

_____

Notary Public, Wayne County, Michigan
My commission expires:
Acting in Wayne County

Pursuant to Council Resolution _____
adopted by the Livonia City Council on
_____.

APPROVED AS TO FORM:

_____
Carter Fisher, City Attorney
Dated: _____

Instrument drafted by:
Michael E. Fisher, Chief Assistant City Attorney
City of Livonia
33000 Civic Center Drive
Livonia, MI 48154

P:\Agreements\rec center\Senior Center Cafe.docx

LETTER TO THE LIVONIA CITY COUNCIL

9.

Parks and Recreation
March 19, 2025

MEETING DATE	PRESENTED BY
S041425/R042825	Ted Davis, CPRP, Superintendent of Parks and Recreation

AGENDA ITEM

REQUEST TO APPROVE THE HOLIDAY PARADE AND TREE LIGHTING ON SUNDAY, DECEMBER 7, 2025; REQUEST TO APPROVE PARADE ROUTE AND THE CLOSING OF CERTAIN CITY STREETS; TO REQUEST PERMISSION FROM WAYNE COUNTY TO CLOSE FARMINGTON ROAD FROM LYNDON TO FIVE MILE, BETWEEN THE HOURS OF 4:00 P.M. AND 5:00 P.M., OR UNTIL THE ROAD IS RETURNED TO NORMAL TRAFFIC OPERATION; TO AUTHORIZE SENIOR POLICE OFFICER MICHAEL ARAKELIAN TO SIGN THE ROAD CLOSURE PERMIT ON BEHALFOF THE CITY, AND THAT THE CITY OF LIVONIA WILL ASSUME LIABILITY FOR ANY DAMAGE CLAIMS RESULTING FROM THE ROAD CLOSURE: Department of Parks and Recreation, re: same.

BACKGROUND DETAILS

Merry & Bright: Livonia's Holiday Parade & Tree Lighting is scheduled for Sunday, December 7, 2025, and will require closing several roads. We are seeking the Council's approval of a request to Wayne County to permit temporary closure of roadways for this event. The route will require closing Stark from Schoolcraft to Lyndon, Lyndon from Stark to Farmington, and Farmington from Lyndon to Five Mile. Police personnel will provide traffic control.

The one-mile parade will begin at 4 p.m. and last about an hour. It will start at Frost Middle School and end at City Hall, where Santa and Mrs. Claus light up the beautiful Civic Center holiday display.

PREFERRED COUNCIL RECOMMENDATION/RESOLUTION (Please complete this field. Attachments are not to be used in lieu of the recommendation)

Approve the Holiday Parade and Tree Lighting to be held on Sunday, December 7, 2025, between the hours of 4:00 p.m. and 5:00 p.m.; and FURTHER, the Council does hereby approve the parade route as follows:
Stark from Schoolcraft to Lyndon, Lyndon from Stark to Farmington, and Farmington from Lyndon to Five Mile Road
FURTHER, the Council does hereby request that the Wayne County Department of Public Services allow the City of Livonia to close Farmington Road between the hours of 4:00 p.m. and 5:00 p.m. or until the road is returned to normal traffic operation; that the City of Livonia will assume liability for any damage claims which may arise as a result of the road closure, as to Wayne County only; and that Senior Police Officer Michael Arakelian is hereby designated and authorized to sign the road closure permit on behalf of the City of Livonia.

ATTACHMENTS

None

APPROVED BY

Date: March 19, 2025

Ted Davis, CPRP, Superintendent of Parks and Recreation

Date: March 28, 2025

Maureen Miller Brosnan, Mayor

LETTER TO THE LIVONIA CITY COUNCIL

17.

Parks and Recreation
April 29, 2025

MEETING DATE	PRESENTED BY
S051925/R060225	Ted Davis, CPRP, Superintendent of Parks and Recreation

AGENDA ITEM

REQUEST TO APPROVE PURCHASE AND INSTALLATION OF OUTDOOR IN-LINE RINK SURFACE THROUGH THE SOURCEWELL PURCHASING PROGRAM: Department of Parks and Recreation, re: to replace the existing surface of the outdoor in-line rink at the Jack E. Kirksey Recreation Center, from budgeted funds.

BACKGROUND DETAILS

The Department of Parks and Recreation is undertaking a project to renovate the outdoor in-line rink at the Jack E. Kirksey Recreation Center. Sport Court has been identified as users' preferred playing surface. The project will eliminate imperfections in the asphalt surface and allow for a quicker turnaround than a complete resurfacing of the existing rink.

We recommend purchasing Sport Court through the Sourcewell contract. Sourcewell is a nationwide purchasing cooperative that offers publicly awarded agreements to public entities. This program meets our Finance ordinance requiring competitive bidding. The quotation from the local representative for Sport Court is attached for your review.

We request that the City Council waive the formal bidding process in accordance with the provisions set forth in Section 3.04.140.D.4 of the Livonia Code of Ordinances, as amended, in so far as it is based upon Sourcewell pricing and no advantage to the City would result from competitive bidding.

PREFERRED COUNCIL RECOMMENDATION/RESOLUTION (Please complete this field. Attachments are not to be used in lieu of the recommendation)

We request that the City Council authorize the Mayor and City Clerk to execute a contract for $77,221.25 with Superior Sports Unlimited, LLC, 4300 Giddings Rd., Auburn Hills, MI 48326. The quote and Sport Court information are attached.

SPECIFIC NAME OF PRODUCT AND NUMBER TO BE PURCHASED (if more than one)

Sport Court "Powergame Plus" sports flooring

CONTRACT: Amount and/or purchase price and length of contract (with dates if applicable)

$77,221.25

DETAILED WORK BEING PERFORMED

Purchase and installation of Sport Court flooring.

FISCAL CONSIDERATIONS (Amount requested and Account(s) used. If applicable, Grant Funding information)

$77,221.25 from 208-755-974-000

ACCEPTANCE OF BID (Please detail the following: Why accepted, why not lowest bidder, company name, contact person, full address)

N/A

REASON TO WAIVE BID PROCESS (Emergency, Professional services, No advantage to City and why, Consortium package, etc): Purchasing through Sourcewell purchasing cooperative

ATTACHMENTS

1. 2025 In-line rink

APPROVED BY

Ted Davis, CPRP, Superintendent of Parks and Recreation — Date: April 29, 2025

Debra Peck Lichtenberg, CPA, Finance Director — Date: May 05, 2025

Carter Fisher, City Attorney — Date: May 09, 2025

Maureen Miller Brosnan, Mayor — Date: May 09, 2025

QUOTE

SUPERIOR SPORTS UNLIMITED INC
"YOUR MICHIGAN SPORTS CONNECTION"

4300 Giddings Rd.
Auburn Hills, MI 48326
Phone 248-342-3826 Fax 248-499-6141
tim@sportcourtmi.com

QUOTE # 116
DATE: APRIL 28, 2025

TO Livonia Parks and Rec

SALESPERSON	JOB	PAYMENT TERMS	DUE DATE
TIM BARNES 248-342-3826	ROLLER RINK		

QTY	DESCRIPTION	UNIT PRICE	LINE TOTAL
15,725 sq ft	SPORT COURT "POWERGAME PLUS" SPORTS FLOORING STRIPING OF GAME LINES SOURCEWELL CONTRACT# 031022-GER		73,121.25 INCLUDED
		SUBTOTAL	73,121.25
		TAX	?
		INSTALLATION	1,600.00
		FREIGHT	2,500.00
		TOTAL COST	**$77,221.25**

THANK YOU FOR YOUR BUSINESS!

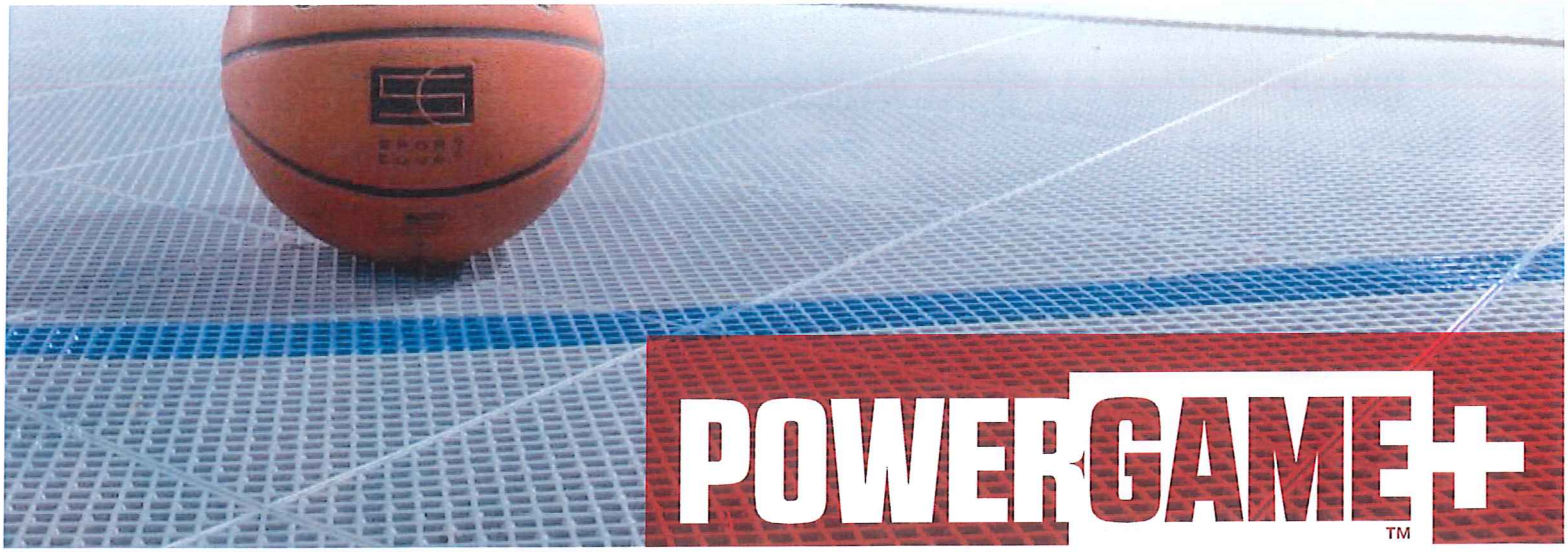

POWERGAME+™

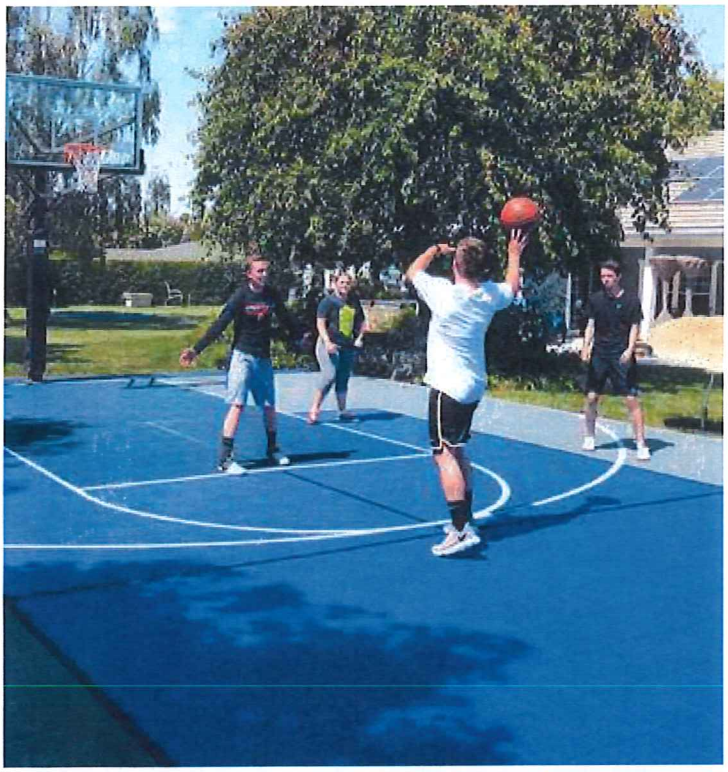

THE SAFEST OUTDOOR COURT

Proven
Custom engineered design that outplays any modular surface in the game—from a company with over 45 years of experience building game courts.

Weather Resistant
Specialty grid design reducing water retention on top of the surface and superior UV resistant formula.

Performance
A lightly textured surface providing the best balance between dry traction and low skin abrasion. Plus, the reliable triple-action locking system keeps the surface secure during assertive play.

Ball Response
PowerGame+™ delivers the same dribbling response as a hardwood floor unmatched by the industry.

Safest
Superior, double-length shock absorption understructure, Lateral Forgiveness™ technology that lessens impact and risk of injuries compared to any other traditional outdoor surface.

Sport Court® is proud to be the official court of the most demanding athletes in the world.

**NCAA is a registered trademark of the National Collegiate Athletic Association.*

SPORT COURT

World's Largest Courtbuilder™

Rely on the World's Largest & Most Experienced Courtbuilder™ Network

- Sports surfaces are not typical everyday purchases, so trusting your Courtbuilder™ is important
- Rely on over 45 years of experience in construction, service and maintenance of sports surfaces
- Ongoing service and support is provided by local Courtbuilders who live and work in your community

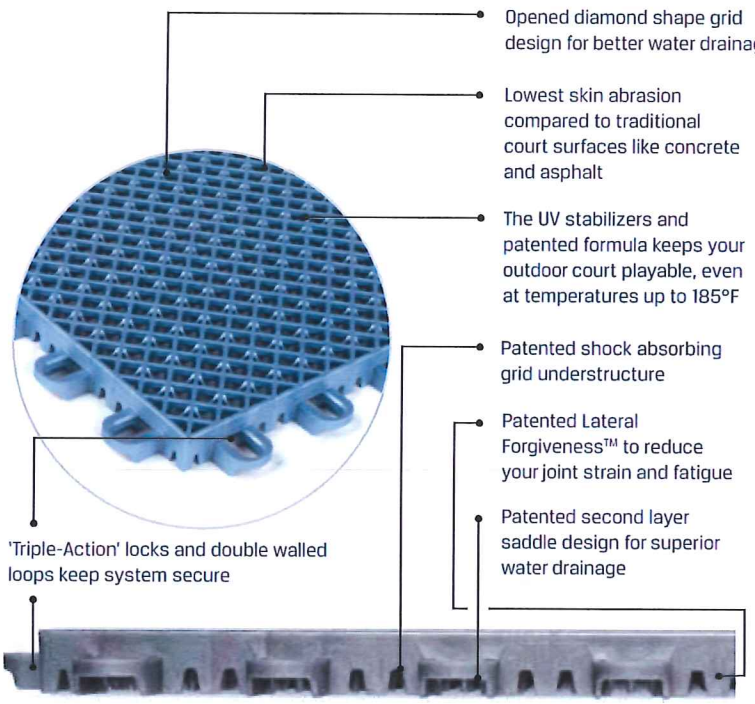

Size	12.04" x 12.04" x 3/4"	☑
Weight	.73 lbs.	☑
Head Impact ASTM 1292	37" impact protection height	☑
Traction ASTM E303	.65 coefficient of friction	☑
Ball Rebound DIN 18032	100% ball bounce	☑
Material	High Impact Polypropylene Copolymer	☑
Quality	ISO 9001 / ISO 14001	☑
Recycling	100% recyclable	☑
Country	USA made	☑
Warranty	15-year limited	☑

Available Colors

BRIGHT BLUE	BURGUNDY	DARK BLUE	GREEN	BRIGHT RED	SAND	STEEL BLUE
TERRACOTTA	KIWI	PURPLE	MUSTARD	TITANIUM	PEARL ORANGE	GRANITE
GRAY	EVERGREEN	TENNIS BLUE	BEIGE	BLACK		

SPORT COURT

SPORTCOURT.COM

Item #SFLYRPGP April 2019

A company of Gerflor theflooringgroup

LETTER TO THE LIVONIA CITY COUNCIL

18.

DPW
April 24, 2025

MEETING DATE	PRESENTED BY
May 7, 2025	Ryan Ferrell, Assistant Director of Public Works

AGENDA ITEM

AWARD OF BID: Department of Public Works, re: for two (2) Wachs Valve Maintenance trailers, from budgeted funds.

BACKGROUND DETAILS

The City of Livonia has roughly 4,752 water valves within our water main system that require regular maintenance to insure they're working properly. These valves allow water to be turned off for regular line maintenance and emergencies such as water main breaks. Currently, these valves are exercised "manually" using a long, handled pole called a "gate key". This can become a cumbersome task, especially if the valves are corroded and "stuck". After much consideration and product review, the Department of Public Works requested bids for two Utility Compact LX Valve Maintenance Trailers through BidNet on April 2, 2025. One bid was submitted.

PREFERRED COUNCIL RECOMMENDATION/RESOLUTION (Please complete this field. Attachments are not to be used in lieu of the recommendation)

Approve the purchase of two (2) Wachs Utility Compact LX Valve Maintenance Trailers from E.H. Wachs, 600 Knightsbridge Pkwy, Lincolnshire, IL 60069 for a total of $94,700.00 from funds budgeted in GL #592-140-000.

SPECIFIC NAME OF PRODUCT AND NUMBER TO BE PURCHASED (if more than one)

Two (2) Wachs Utility Compact LX Valve Maintenance Trailers

CONTRACT: Amount and/or purchase price and length of contract (with dates if applicable)

$94,700.00

DETAILED WORK BEING PERFORMED

n/a

FISCAL CONSIDERATIONS (Amount requested and Account(s) used. If applicable, Grant Funding information)

$94,700 GL #592-140-000

ACCEPTANCE OF BID (Please detail the following: Why accepted, why not lowest bidder, company name, contact person, full address)

Sole bidder

REASON TO WAIVE BID PROCESS (Emergency, Professional services, No advantage to City and why, Consortium package, etc): n/a

ATTACHMENTS

1. WACHS COMPACT LX VALVE MAINT TRAILER
2. Wachs Valve Turner Spec Pg 12

APPROVED BY

Ryan Ferrell

Date: May 07, 2025

Ryan Ferrell, Assistant Director of Public Works

Date: May 09, 2025

Don Rohraff, Director of Public Works

Connie Kumpula

Date: May 09, 2025

Connie Kumpula, Chief Accountant

Debra A. Lichtenberg

Date: May 09, 2025

Debra Peck Lichtenberg, CPA, Finance Director

Maureen Miller Brosnan

Date: May 09, 2025

Maureen Miller Brosnan, Mayor

WACHS UTITLITY COMPACT LX VALVE MAINTENANCE TRAILER VMT, GAS

ITEM #	MODEL NUMBER	DESCRIPTION	QTY	UNIT PRICE	TOTAL
1	79-000-25	Compact LX (Gas) – VMT (RH): Single turner valve maintenance trailer; includes Wachs 750 Ft/lb (1020 Nm) Extended Reach Valve operator for those preventive maintenance activities, telescoping valve key and Wachs ruggedized TC-100 with GPS controller/datalogger. A 16 H.P (12 kW) Briggs and Stratton V-Twin engine with hydraulic pump provides ample power for all contained functions, including an auxiliary HTMA Class II circuit; 10 gallon (38 L) reservoir, fan cooled heat exchanger, continuous duty rated for 8 GPM (30.3 LPM) @ 2,000 PSI (140 bar). The LX package bundles the light bar with arrow board, 45' (14 M) auxiliary hydraulic hose reel for operation of hydraulic power tools, Bluetooth tethering module (installed in ERV-750) for wireless communication between the exerciser and Controller/Data Logger and steel storage bin.	2	$42,545.00	$85,090.00
2	08-000-03	WDP3500 Dewatering Pump is light weight, compact unit capable of discharging water quickly and quietly. Centrifugal-type pump features a direct drive hydraulic motor for continuous use. The contaminant-tolerant gear motor is designed for continuous high-speed operation. Direct drive impeller with no spindle bearings that require periodic lubrication or replacement. Cast stainless steel, semi-closed impeller resists corrosion and sealed drive shaft. Includes operation manual.	2	$3,745.00	$7,490.00
3	08-400-03	Hose, Discharge 3" for WDP3500 25'x 3" Diameter Vinyl Coated Discharge Hose with Aluminum Female Camlock Coupler	2	$220.00	$440.00
4	11-408-00	Telescopic Valve Key - 2" AWWA (Colder Climate). Manufactured from high-strength steel, adjustable from 4ft (1.22 M) to 9ft (2.74 M) with spring loaded pin to eliminate loss. Rated to 800 lb-ft (1,085 Nm) of torque for use with the Wachs P/2 and RS/2 valve operators and ERV 750. Weighs only 24 lbs (10.9 kg). Add the Tee Handle adapter (11-408-10) for manual functionality when machine is not in use.	2	$595.00	$1,190.00
5	11-242-03	Key Extension add on - 36" Extends the telescoping key to reach all valves.	2	$245.00	$490.00
				GRAND TOTAL	$94,700.00

Lead Time 4-6 Weeks

Warranty 1 Year

NAME E.H. Wachs - A Division of ITW

ADDRESS 600 Knightsbridge Parkway, Lincolnshire, IL. 60069

CONTACT Ken Redding

PHONE 847-484-2773

Utility Products

WACHS Utility Products
The Valve Maintenance Experts™

VALVE MAINTENANCE SYSTEMS

HANDHELDS, TRAILERS, SKIDS
PIPE CUTTERS & ACCESSORIES

turnvalves.com

VALVE MAINTENANCE EXPERTS

WACHS UTILITY PRODUCTS

Wachs Headquarters 1932

1970s Mounted Valve Exerciser

About Wachs Utility Products

Wachs Utility Products is a unit of E.H. Wachs, one of the oldest and largest machine tool makers, founded by Edward H. Wachs in Chicago back in 1883. Today, Wachs is a Division of ITW, an industrial manufacturer with operations in 58 countries and 45,000 employees worldwide. Wachs Utility Products benefits from their strong leadership, financial strength and global engineering, sales and product resources.

Municipalities and the water organizations we serve benefit as well, knowing that the investments in valve maintenance equipment made today will be supported and enhanced in the years to come. Wachs has a culture of continual product improvements; upgrades to our VITALS® software for example allow greater compatibility or functionality from our equipment.

Hardware and Software

When water managers look to partner with a manufacturer for recommended or mandatory valve maintenance activities, they must consider not only the quality of the equipment but the quality of the software that interfaces with it. Most software companies do not offer equipment, and most equipment companies offer little or rudimentary software solutions. Wachs Utility Products is the industry leader in valve maintenance hardware and software.

Wachs equipment is individually hand assembled and tested at our headquarters outside Chicago, allowing us to offer a wide range of options to fit your exact requirements. Our dedicated sales staff, partnering with established dealers in select locales, are available to support our equipment from specification, in-servicing and training, to maintenance, spares and upgrades.

Utility Products | 600 Knightsbridge Parkway | Lincolnshire, IL 60069 | 847-537-8800 | sales@turnvalves.com | **turnvalves.com**

VALVE MAINTENANCE PRODUCTS

EXERCISERS & SAWS

MAINTAINING WATER ASSETS

> "As the TA of a large Public Water Works, I spec'd out Wachs equipment to vacuum out valve boxes and exercise stiff or stuck valves. These are high quality products, built for a heavy work environment... we've had good training, and very few problems with minimal down time. You get what you pay for with Wachs, highly recommended."
>
> Boyd B., Technical Analyst
> Regional Public Works

Tools for Professionals

Wachs Utility Products are designed to maintain your valuable water system assets. In this catalog we present the Wachs tools preferred by municipal and water authority professionals to locate, access, operate and record system assets.

A vital task in maintaining water infrastructure is turning, operating or exercising valves – different ways of describing the process of cycling a valve to prevent sticking or freezing caused by debris or tuberculation. Wachs valve exercisers and maintenance systems are offered in a wide range of products including handheld, trailer, skid, and truck mounted, as well as our pipe cutting machines and valve accessories.

Product Index

Here are our major product groups, and the pages in the catalog where they can be found:

Wachs Automation and VITALS® Software 4

Handheld Valve Exercisers 6

Truck Mounted Valve Exercisers 8

Valve Maintenance Trailers 11

Valve Maintenance Skid Systems 16

Valve Maintenance Truck 18

Pipe Saws and Cutters, Diamond Wire Saws 22

Valve Maintenance Accessories 26

VALVE MAINTENANCE SYSTEMS

ROOM TO GROW

EQUIPMENT FOR EVERY BUDGET

> “We’ve been using Wachs valve maintenance equipment for over 20 years now. We started with a handheld, then added truck mounted exercisers, then added their trailers. As our system has grown from a few thousand valves to over 15,000, the Wachs equipment has grown with us.”
>
> Steve K., Superintendent
> County Utilities Water Distribution

Start Small

In these challenging economic times we realize there may be concerns about acquiring equipment, with some organizations reluctant to allocate funds for maintenance. But keep in mind even the smallest towns, cities or water authorities can start small, and grow their valve maintenance programs over time. What’s important is to start.

Choose to start small, knowing that every piece of Wachs equipment purchased, from a handheld exerciser all the way up to our largest trailer, skid or truck, becomes a building block to an effective valve maintenance program.

Saves Money

With a Wachs valve maintenance system and two operators, even small to midsize organizations can implement suggested or mandated procedures for infrastructure maintenance, saving you expensive outsourcing while minimizing valve replacement and service outage related costs down the road.

Wachs offers a wide range of equipment to suit any municipal need and budget, from the simplest handheld valve exercisers up to a custom built valve maintenance truck upfitted by Knapheide complete with our VMS Valve Maintenance System. No matter how large or sophisticated your water operations get, Wachs Utility Products equipment is designed to grow with you. Let us help you get started, or help build on your existing program’s foundation.

LOCATE. ACCESS. OPERATE. RECORD.

VALVE MAINTENANCE PROCESS

MAINTENANCE PROGRAM BASICS

Wachs Utility Products builds a wide range of equipment related to water valve maintenance, and generally speaking our equipment is grouped by its form factor, such as a handheld exerciser, a VMT trailer, or a VMS skid platform. However, an equally important way to consider what Wachs equipment fits your needs is by ***function***. In the valve maintenance field it can be distilled down to these four functions:

Locate valves using GPS tracking of assets via our handheld controllers

Access valves by cleaning out their vault with power washout and vacuum components

Operate (or exercise) valves using our handheld, trailer or truck mounted exercisers

Record valve parameters via a handheld controller, for later transfer to your desktop system

In this catalog, the header graphic at the top of each product's page indicates which of these functions it provides. A check mark indicates standard, and a plus sign indicates optional.

Consider your needs; a handheld P-2 valve exerciser is an excellent starting point. Combining several tools gives a wider range of capability, – a Trav-L-Vac 300 and a P-2 handheld exerciser would cover access and operate. Or move up to our bestselling Standard LX trailer or skid system, which includes tools for all four functions, serving your department's needs well into the future.

> “Now serving as a Temporary Foreperson, I’ve had first hand experience operating our truck with Wachs equipment. Valves that were seized can be broken free and exercised, and its VITALS software nullifies the risks we had of breaking a valve by just cranking on it. You’re lucky if you’re the one who gets to run this truck, your shoulders and joints will thank you for it!”
>
> Michael G.,
> Peel Region Water Authority

WACHS AUTOMATION

VITALS® SOFTWARE

LOCATE
ACCESS
OPERATE
RECORD

VITALS Mobile Equipped

Communicates with
Exerciser & VITALS Desktop

Synchronizes with VITALS Desktop

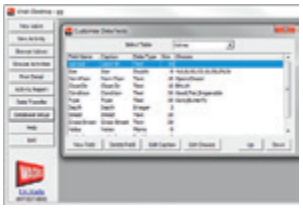

Custom Data Fields

Browse & Edit Values

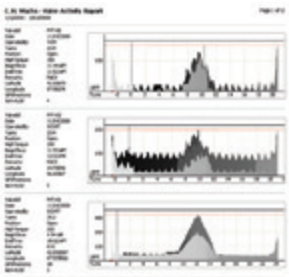

Activity Reporting

Complete Valve Maintenance Provider

Some water municipality suppliers do a good job with software. Some manufacturers do a good job with hardware and equipment. Wachs Utility Products does a great job with both, offering our VITALS® software on many of our systems. Our bestselling trailer, skid, and truck-mount valve maintenance systems use a powerful handheld controller equipped with our industry unique VITALS.

Wachs Utility Products has long been an innovator in the field of computerized data collection and recording, and with our newest VITALS software and handheld controllers we're taking that to the next level. Wachs ruggedized, Windows 10 based VITALS tablet brings the power of your desktop with you to the jobsite.

Locate and Record

VITALS is an acronym for Valve Information Tracking And Logging System. It allows the user to operate our equipment remotely, while giving you “vital” asset information in the palm of your hand. Valve location, type, size, number of turns, direction and more can be recorded in real time and transferred to your desktop. Monitor the valve exercising procedure in detail remotely from the safety and comfort of your truck, keeping your crew out of traffic and the elements where accidents can occur.

This information allows the operator to visualize exactly what’s happening at the valve. Adjustable torque control signals when preset limits are reached, and trigger auto reverse or auto shut down to prevent valve damage. When Wachs Automation and VITALS are combined, they become a powerful diagnostic and maintenance tool.

VITALS allows an operator to exercise a valve while recording critical valve information including precise GPS location of the valve's position, that can be synchronized between the handheld controller and your desktop. Custom valve ID information is recorded such as the number of turns, maximum torque and valve location.

TC-100 TABLET CONTROLLER

HANDHELD REMOTE CONTROL

LOCATE
ACCESS
OPERATE
RECORD

RUGGEDIZED TABLET CONTROLLER WITH VITALS SOFTWARE

Advanced Equipment Control

Wachs Utility Products TC-100 is a new way of controlling your valve maintenance systems, offering the same portability as our previous handheld but built on a new, more powerful architecture. Utilizing the latest version of VITALS® software, it offers enhanced compatibility with your desktop system. Meeting IP68 and MIL-STD-810G ratings, its rugged ergonomic design and long battery life means it's able to handle a long day on the job in the harshest environments.

Wachs TC-100 features built-in GPS, a quad-core processor for faster operation, and increased storage capacity for future upgradeability. Standard with 8GB RAM memory and 128GB flash storage, it offers additional removable storage via a Micro SDXC card slot. Wachs TC-100 utilizes Microsoft's Windows 10 Pro operating system, designed to handle larger files and detailed maps. Attach a monitor, keyboard and mouse to the optional office docking station and turn the TC-100 into an office PC capable of accessing your organization's resources like e-mail, network, apps, and services. Plus the docking station keeps the battery charged, ready when it's time to head out to the field.

Wachs TC-100 dust and water resistant ergonomic enclosure includes a sunlight-readable display, and a 43.2 Watt-hour battery will power you through the day. Should it run low, the included AC and vehicle chargers allow you to top off anywhere. Designed and assembled in the United States, the TC-100 offers superior build quality and secure data protection. The TC-100 includes a one-year warranty against manufacturer defects. An optional 3 year protection plan extends the warranty, adds normal wear and tear protection, and provides 50% discounts on repair parts, subject to coverage details.

POW-R-DRIVE 2

HANDHELD VALVE EXERCISER

Pow-R-Drive 2 Handheld Valve Exerciser shown with optional handwheel adapter

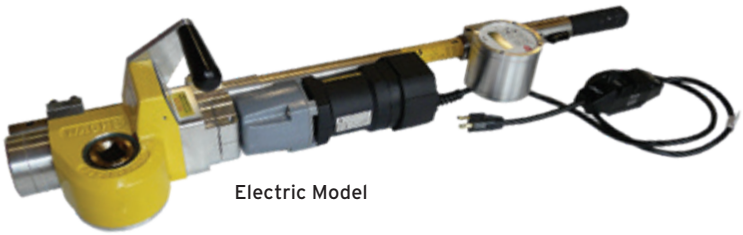

Electric Model

Hydraulic Model

Pow-R-Drive 2 is available in high speed or high torque models

Pneumatic Model

Pow-R-Drive 2 Electric is available with optional VITALS torque control

THE INDUSTRY STANDARD

Wachs Pow-R-Drive 2 (or P-2) is the industry standard in handheld valve exercisers. It's lighter, faster and more powerful than any other machine of its kind, bringing up to 800 ft-lb of torque to the task. The P-2's compact size and light weight facilitate the job of fast shut downs or turning large, stuck or hard-to-reach valves. It's the ideal tool for municipalities or organizations dealing with critical valves of any sort, including water material handling and fire prevention systems.

Most importantly, it helps eliminate the arm and back injuries associated with attempting to manually turn valves. The P-2 includes a 1 inch (25.4 mm) square drive adapter that interfaces with 1 inch square telescoping and non-telescoping valve keys that accommodate the standard 2 inch AWWA nut.

Wachs Pow-R-Drive 2 models are available in electric, hydraulic or pneumatic drive, delivering between 500 to 800 ft-lb of torque depending on drive type. The P-2 is offered in your choice of high torque (HT) or high speed (HS) models, with select electric drive models available with VITALS® torque control. An optional universal handwheel adapter allows it to operate non-rising stem handwheels.

RS-2

RISING STEM VALVE EXERCISER

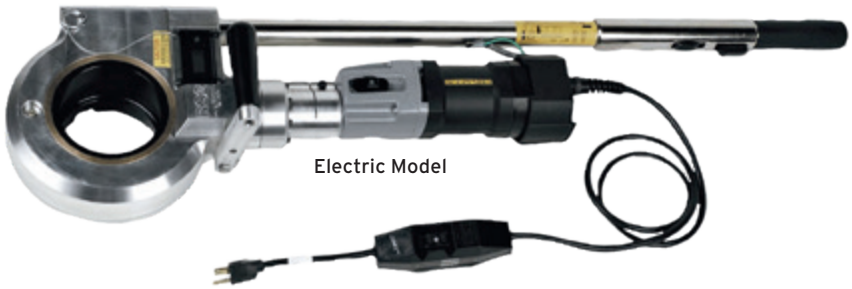

RS-2 is available in electric, pneumatic or hydraulic drive as shown here

RUGGED VERSATILITY

Wachs Utility Products RS-2 handheld valve exerciser is the perfect tool for operating or exercising handwheel and rising stem valves. Utilizing a large, open 4 inch (102mm) hub design, it's designed to accommodate most varieties of rising stems through the hub opening. The RS-2 offers up to 800 ft-lb of torque depending on drive type, with a maximum of 55 rpm for fast, reliable opening and closing of water, wastewater and natural gas valves in the field.

The RS-2 handheld valve exerciser, like our Pow-R-Drive 2 handheld, is designed with operator safety in mind, helping to prevent arm and back injuries associated with manually turning large, stubborn or frozen valves. Portable for everyday use, the RS-2 is available in your choice of electric, hydraulic or pneumatic drive. It's extremely solid build-quality means years of trouble free, reliable operation.

Wachs RS-2 offers a range of adapters and accessories to suit most applications, including PIV (Post Indicator Valves). There's a 1 inch (25.4 mm) square drive adapter and telescoping valve keys, which used in conjunction can replicate the function of the P-2. Dedicated handwheel adapters that remain on the handwheel are optional, as is a universal handwheel adapter to fit most common handwheel types. All Wachs handheld exercisers come complete with a sturdy, steel storage case with carry handles.

Dedicated and universal handwheel adapters are available optionally

Optional Telescoping Valve Key

Optional Handwheel Adapter
(Fits P-2 and RS-2 Exercisers)

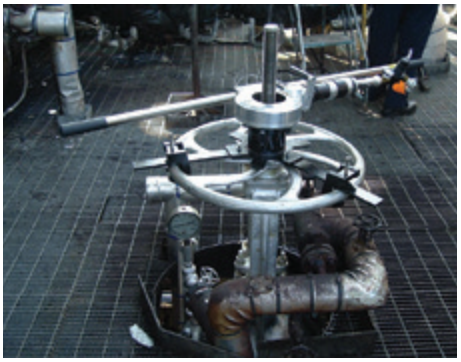

RS-2 shown with optional universal handwheel adapter on a rising stem valve

ERV-750

EXTENDED REACH VALVE EXERCISER

LOCATE
ACCESS
OPERATE
RECORD

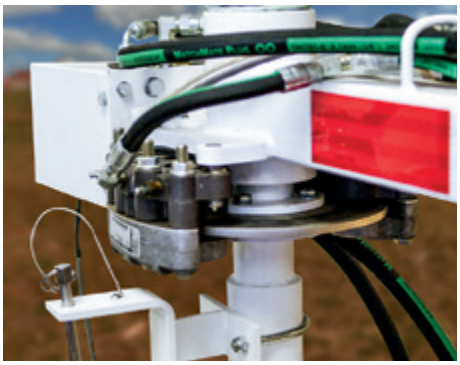

Heavy duty hydraulic braking system with push button release

High stack version of the ERV-750 is available for bumper mounting

ERV-750 easily reaches any curbside valve box or hydrant within 13 feet of the mount

POWER WHERE YOU NEED IT

Wachs ERV-750 Extended Reach Valve exerciser is where torque meets flexibility, and the first choice of water system operators everywhere. The ERV-750 is named for the 750 ft-lbs (1015 Nm) of torque it delivers, torque it can deliver even when fully extended. It gives the power you expect with the reach you need, with a rotating and extendable arm that reaches out to a full 13 feet (3.96m).

The ERV-750 pivots to reach to curbside valve boxes or hydrants. It uses a dual hydraulic disc brake system with push button release that's designed to hold the full torque force of the machine while operating. Built to last, the ERV-750 arm is constructed with a strong 3 inch square steel box section to resist twisting forces.

Available as a standalone option, it's the ideal valve exerciser for water organizations of all sizes. The ERV-750 is offered in Low Stack models for mounting to trailers, skids, and flatbed trucks, plus a High Stack version for vehicle bumper mounting. It includes a mechanical lock to secure the exerciser during travel. The ERV-750 is standard equipment on our Compact LX, Standard LX and Grand LX Trailers and Standard LX and Service Body Skid systems.

TM-7

TRUCK MOUNTED VALVE EXERCISER

LOCATE
ACCESS
OPERATE
RECORD

Easily installed in utility vehicles to access valves curb side

TORQUE TO GO

When you need the Mack Daddy of valve exercisers, step up to Wachs TM-7 Plus. The rigid frame and high torque capacity, coupled with Wachs Intelligent Automation, make this the perfect tool to free and exercise the larger or older valves often found in bigger or more established cities. Wachs TM-7 conforms to the AWWA Valve Exercising Standard, allowing a single operator to rehabilitate stubborn valves, even ones you may already have scheduled for replacement. If the valve isn't broken, the TM-7 will likely turn it without damaging it.

Newly standard on the TM-7 is the Plus model update, which adds manual control of the TM-7 at the flip of a switch. The Plus feature serves as a redundant control, allowing operators full access to onboard direction of rotation controls while monitoring the electronic revolution counter. Plus models also display manual torque control on the gauge when automated machine control is not available, so the tool is always functional and ready to go to work.

Available as a standalone option with truck and trailer mounting options, it's offered in two models: the TM-7 Standard Duty Plus that develops up to 1500 ft-lb (2034 Nm) of torque, and the TM-7 Heavy Duty Plus which develops 2500 ft-lb (3390 Nm) of torque. Plus models are fully compatible with optional VITALS® control and data logging of torque and direction of rotation. Wachs TM-7 SD Plus is standard equipment on the Grand LX trailer.

Custom mounting options available for utility service bodies

> "My favorite machine is Wachs TM-7. We have run into valves that have more than likely never been turned and were considered broken. We had a demo from another manufacturer, and had picked out a valve we knew would be extremely hard to operate. This manufacturer failed at operating the valve - the Wachs equipment had no problem operating it."
>
> Robby P., Superintendent
> Manatee County Water Distribution

*Data logger sold separately

SAFE MAINTENANCE

REMOTE CONTROL

KEEP YOUR HANDS OFF

The safest exerciser to operate is one you don't have to keep your hands on. While that's not possible with manual T-bars or handheld valve exercisers, it is possible with Wachs ERV-750 and TM-7 exercisers. Unlike competitive machines, it's not necessary to hold Wachs machines down on the valve to keep them from bucking. Our ERV-750 uses a system of robust, extendable arms with hydraulically operated disc brakes that keep the machine positioned firmly in place. Our TM-7 uses a rigid, lockable slide that's capable of handling its mighty torque output – hands free. They're not going anywhere until your valve procedure is complete.

With Vitals software and our handheld tablet with Bluetooth®, both exercisers offer true remote control capability, untethered by cables. That means your crew can run the valve exercising program from a distance, even inside the truck cab. While that may sound like a convenience on a rainy or snowy day, it also means your crew is out of traffic and out of harm's way. When the procedure is done, Vitals automatically handles data collection and reporting for uploading to your system. That's a pretty "vital" difference from our competitors.

> "Seeing is believing. Prior to Wachs, we struggled to operate valves, using 'manpower' on cheater bars, not knowing if they were regular or reverse turning. We increased safety tenfold with Wachs by taking our crews out of traffic, while removing any doubt about operating our valves. We're now providing preventative valve maintenance rather than just reactive measures."
>
> Larry U., Planner
> Public Works Commission

A Cut Above

Even our pipe cutting solutions are designed to be safer. Unlike handheld chain or cutting-wheel saws, Wachs Guillotine saws are designed to mount to the workpiece, to prevent life altering "kickback" injuries. Safety may cost a little bit more upfront, but our Diamond Wire saws, with their long lasting diamond infused wire, offers one of the lowest costs per cut in the industry. Safety and savings help make our equipment a cut above.

TRAV-L-VAC 300

VACUUM EXCAVATION TRAILER / SKID

Paired with a handheld valve exerciser, the Trav-L-Vac 300 is ideal for small municipalities

Trav-L-Vac 300 skid handles debris and liquids safely and quickly

Easily Transportable

Wachs Trav-L-Vac-300 is ideal for working with smaller vehicles, positioning in tight quarters, or for use in high traffic areas. The Trav-L- Vac 300 allows utility companies and public works departments to perform small to midsize vacuum tasks without the massive investment of a large highway vac truck.

The Trav-L-Vac 300 is a safe, non-destructive and cost-effective machine for precise utility excavation that requires less backfill and restoration. It helps prevent underground damage, while offering a more accurate way to excavate soil and locate underground utilities.

Choice of Trailer or Skid

Ideal for valve box cleaning and excavation, the Trav-L-Vac 300 handles solid and liquid debris safely and quickly. It is available as either a compact trailer for towing to job sites with your choice of ball coupler or Pintle hook, or as a skid mount model ready to bolt down for operation from small flatbed trucks. Lightweight, the trailer can be easily pulled by light duty pickup trucks.

Featuring a powerful 20 horsepower gasoline engine, it comes complete with a 90 gallon spoils tank with manual discharge, a heavy duty positive displacement blower that can generate 345 CFM at 14 inHg, and triple filtration. In short, it's all the vac unit you'll need for ordinary day-to-day tasks. Combined with a Wachs Pow-R-Drive 2 handheld exerciser, the Trav-L-Vac 300 is a good starting point for smaller organizations and municipalities looking to self-perform their valve maintenance activities.

Steel suction tube allows the operator to effortlessly remove debris

COMPACT LX
VALVE MAINTENANCE TRAILER

LOCATE
ACCESS
OPERATE
RECORD

Features an HTMA Class II circuit and 50ft hydraulic hose reel for accessories

Dedicated valve exerciser provides 750 ft-lb of torque and 13 foot of reach.

The rugged Compact LX Valve Maintenance Trailer is ready to go at a moment's notice.

Dedicated Exercising Trailer

A great starting point in an affordable valve maintenance program is Wachs Compact LX Trailer. This trailer includes the basic building block of a valve maintenance program, our class leading ERV-750 extended reach operator with a reach of 13 feet (3.96 meters) and a powerful 750 ft-lb. of torque.

Built to withstand the rigors of years of service, it is ideal for municipalities or contractors looking for an affordable, transportable and long-lasting valve exercising trailer. Designed to carry our powerful ERV-750 (Extended Reach Valve) exerciser and Class II Hydraulic Power Unit, Wachs Compact LX is built to perform valve exercising where there is no need for vacuum excavation or power washout. A 50 foot (15.2m) hydraulic hose reel from the HPU is included, to run your hydraulically powered tools, such as breaker bars.

The complete trailer weighs less than 1400 lbs (635 kg), is only 63 inch wide (1600mm) and 105 inch long (2670mm) and is easily pulled with light duty vehicles. With its small footprint the Compact LX is ideal for narrow city streets and tight alleys, for fragile or forested landscapes, or anywhere a large, heavy trailer or truck won't fit.

Wachs Compact LX includes a powerful handheld controller with our industry exclusive VITALS® software. This class leading software eliminates misdirection and over-torquing of valves during operation to prevent damaging or breaking them. Comprised of both mobile and desktop modules, VITALS allows you to set torque limits and record infrastructure details including location, valve-operating direction, and torque applied.

STANDARD LX

VALVE MAINTENANCE TRAILER

LOCATE
ACCESS
OPERATE
RECORD

Standard LX includes a powerful 500 CFM vacuum and 250 gallon spoils tank

Ready for Serious Valve Maintenance

A favorite in trailer mounted valve maintenance systems, Wachs Standard LX excels at all the functions typically associated with a municipality or water district self-performing a valve maintenance program. Utilizing Wachs exclusive VITALS® software to help track your valuable water infrastructure and keep it operating at peak efficiency, you'll discover the Standard LX is "vital" to your organization.

Wachs Standard LX trailer includes our class leading ERV-750 extended reach operator with a reach of 13 feet (3.96 meters) and offering a powerful 750 ft-lb. of torque. This is the industry standard for a completely upgradeable, versatile platform designed to transport all the valve maintenance and vacuum tools needed in the field. Built to withstand the rigors of years of service, it's the perfect solution for municipalities or contractors looking for a rugged, long lasting self-contained system.

The Standard LX powered by gas or diesel engine comes complete with a wireless handheld controller with datalogger, a powerful 500 CFM-11 inHg vacuum and a 250 gallon spoils tank utilizing Wachs exclusive hydraulic slide, tilt & rear discharge with a power latching rear door. Also included is a pressure washer system with 95 gallon water tank and an HPU with a HTMA Class II circuit. Loaded with storage and accessories, the Standard LX is a single valve turner trailer, ready for serious valve maintenance work.

Wachs Standard LX includes our industry exclusive VITALS software that eliminates misdirection and over-torquing of valves during operation to prevent damaging or breaking them. VITALS allows you to set torque limits and record infrastructure details including location, valve-operating direction, and torque applied.

Includes our class leading ERV-750 extended reach valve exerciser

The included pressure washer system is ideal for cleaning valve boxes and covers

GRAND LX

VALVE MAINTENANCE TRAILER

LOCATE
ACCESS
OPERATE
RECORD

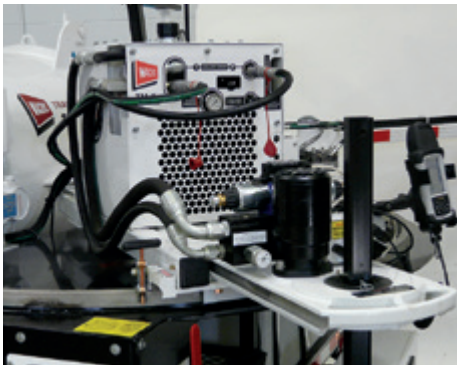

TM-7 SD Plus valve operator provides 1500 ft-lb of torque for rehabilitating larger valves

ERV-750 extended reach valve exerciser allows valve operation from the road

Ultimate Valve Maintenance Trailer

If you're looking for the ultimate valve maintenance trailer, look no further than Wachs Grand LX diesel or gasoline powered trailer. It has all the boxes checked, including power wash, powerful vacuum, large capacity power operated spoils tank, programmable work lights, HTMA Class II HPU with auxiliary hose reel, ERV-750 extended reach valve exerciser, and a powerful TM-7 exerciser for large or really tough valves. You name it, it's got it.

The Grand LX is a highly versatile platform, designed to transport all the valve maintenance and vacuum tools needed in the field, meaning no need to go back to the yard to get additional equipment. It's the perfect solution for municipalities or contractors looking for a rugged, long lasting self-contained system.

Unlike our other trailers, the Grand LX includes two valve turning machines: our class leading ERV-750 extended reach operator and the TM-7 Standard Duty Plus mounted on a swivel deck. As our top of the line trailer offering, it also comes complete with a wireless handheld controller with datalogger, a high pressure washer system with a 66 gallon water tank, a powerful 500 CFM-11 inHg vacuum, and a 250 gallon spoils tank utilizing Wachs exclusive hydraulic slide, tilt & discharge with a power latching door, here with a side discharge to make room for the TM-7 swivel deck at the rear.

Loaded with storage and accessories, this trailer is ready to tackle the biggest jobs and your toughest valves. For organizations looking for a single valve turner trailer that does not require the grunt of our TM-7 SD Plus, Wachs Standard LX is a great choice. But for those municipalities with the need, this machine is "Grand" in every sense of the word.

The heavy-duty spoils tank features power tilt and dump for easy emptying

STANDARD BUILDER TRAILER

CUSTOM CONFIGURED TRAILER

LOCATE
ACCESS
OPERATE
RECORD

Order your upgradeable trailer for current or future needs

Upgradeable Custom Trailer

Wachs Standard Builder Trailer can be configured just the way you want it, built exactly to fit your needs and budget. Its future upgrade path means you can order what you need today, knowing that you can upgrade the trailer tomorrow.

The Standard Builder allows for an ala carte selection of our standard valve maintenance modules to be installed onto our heavy duty trailer. The Builder platform's upgrade path offers maximum versatility – for example, configure a Hydro-Vac trailer with hydraulics today, add a ERV-750 Valve Exerciser later.

Power pack provides pressure washer system and 500CFM vacuum

Plan Ahead for Anticipated Needs

Below is a list of the modules available on your Standard Builder Trailer:

- ❑ Kubota Diesel Engine
- ❑ 27 HP Gas Engine
- ❑ Power Pack with Hydraulics (Required for ERV-750)
- ❑ Power Pack without Hydraulics
- ❑ 500 CFM 11 inHg Vacuum
- ❑ ERV-750 Extended Reach Valve Operator with Bluetooth*
- ❑ Handheld Controller/Datalogger
- ❑ 150 gallon Power Operated Spoils Tank
- ❑ 250 gallon Power Operated Spoils Tank (Best Value)
- ❑ 350 gallon Power Operated Spoils Tank
- ❑ 50 foot Hydraulic Hose Reel*
- ❑ Hydraulic Breaker*
- ❑ Service Light Package
- ❑ Lockable Job Box
- ❑ Hot Water System
- ❑ Spare Tire

*Requires Hydraulics

Order your choice of three capacities of power-operated spoils tanks

STANDARD LX SKID

VALVE MAINTENANCE SKID

LOCATE
ACCESS
OPERATE
RECORD

Skid system allows for simple mounting to a flatbed truck.

250 gallon spoils tank utilizing exclusive hydraulic slide, tilt & powered dump system

All the features of the Valve Maintenance Trailer in a skid configuration

Bestselling Skid System

Wachs Utility Products Standard LX Skid ranks among our bestselling products, excelling at all the functions typically associated with a municipality or water district's valve maintenance program.

Wachs Standard LX skid includes our class leading ERV-750 extended reach valve exerciser with a reach of 13 feet (3.96 meters) and offering a powerful 750 ft-lb. of torque. This is the industry “standard” designed to transport all the valve maintenance and vacuum tools needed in the field. Built to withstand the rigors of years of service, it’s the perfect solution for those looking for a rugged, long lasting self-contained system.

Wachs Standard LX skid includes our industry exclusive VITALS® software that uses “No Assumptions” logic in its programming. This specially designed software, developed over the last three decades, has one goal in mind – to eliminate misdirection and over-torquing of valves during operation to prevent damaging or breaking them. VITALS® allows you to set torque limits and record infrastructure details including location, valve-operating direction, and torque applied.

Wachs Standard LX Skid comes complete with a wireless handheld controller with datalogger. Standard equipment includes a powerful 500 CFM-11 inHg vacuum, a 250 gallon spoils tank utilizing Wachs exclusive hydraulic slide, tilt & rear discharge, with a power latching rear door. Also standard is a pressure washer system with an 80 gallon water tank, and a HPU (Hydraulic Power Unit) with a HTMA Class II circuit.

Standard LX Skid includes all the tools required for sophisticated valve maintenance programs. The TM-7 HD Plus exerciser for very large or hard-to-turn valves is optional.

STANDARD BUILDER SKID

CUSTOM CONFIGURED SKID

LOCATE
ACCESS
OPERATE
RECORD

Add hose reels, light packages, and spoils tank size of your choice.

Upgradeable Custom Skid

For those who prefer a skid mounted solution that bolts directly to a flatbed truck, Wachs Standard Builder Skid is a great way to configure a valve maintenance skid exactly the way you want it. Order what you need today, fitting your current requirements and budget, knowing that you can upgrade the skid tomorrow.

Our Standard Builder Skid is fully customizable. The Builder Skid offers an ala carte selection of Wachs valve maintenance modules installed onto our heavy duty, steel skid platform, ready to run. The Builder platform has a strong upgrade path; for example, configure it as a Hydro-Vac with Hydraulics today, then add an ERV-750 or TM-7 valve exerciser as your needs grow.

Designed for ease of use, the rear-mounted spoils tank gets the job done

Plan Ahead for Anticipated Needs

Below is a list of the Wachs modules you can add to your Standard Builder Skid:

- ❑ Kubota Diesel Engine
- ❑ 27 HP Gas Engine
- ❑ Power Pack with Hydraulics (Required for ERV-750/TM-7)
- ❑ Power Pack without Hydraulics
- ❑ 500 CFM 11 inHg Vacuum
- ❑ ERV-750 Extended Reach Valve Operator with Bluetooth*
- ❑ TM-7 HD Plus Valve Exerciser with Bluetooth*
- ❑ Handheld Controller/Datalogger
- ❑ 150 gallon Power Operated Spoils Tank
- ❑ 250 gallon Power Operated Spoils Tank (Best Value)
- ❑ 350 gallon Power Operated Spoils Tank
- ❑ Hydraulic Hose Reel*
- ❑ Service Light Package
- ❑ Lockable Job Box
- ❑ Hot Water System

*Requires Hydraulics

Standard Builder Skid is the perfect fit for any valve maintenance program

SERVICE BODY SKID

FOR VALVE MAINTENANCE TRUCK UPFITTING

LOCATE
ACCESS
OPERATE
RECORD

250 gallon spoils tank utilizing exclusive hydraulic slide, tilt & powered dump system

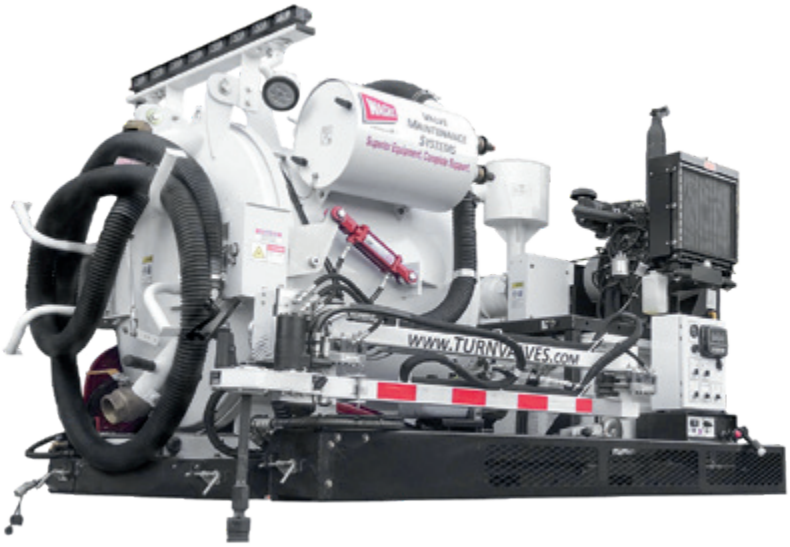

Features Wachs ERV-750 Extended Reach Valve Exerciser with 13 feet of reach

Optional TM-7 HD 2500 ft lb Mounted Valve Exerciser Available

Designed for the Valve Maintenance Truck

Wachs Service Body Valve Maintenance Skid is a comprehensive system used in conjunction with the custom Knapheide service body. Assembled by Wachs and shipped direct to Knapheide, it is upfitted following installation of the custom service body to your furnished chassis cab.

The Service Body Skid is available with diesel or gasoline power, usually tied to the choice of engine in the chassis cab. It draws its fuel supply from the truck, eliminating the need for separate fueling of the SB Skid's diesel or gasoline engine. Like our other skid platforms, all Wachs valve maintenance components such as the vac system, water supply, spoils tank and HPU come preinstalled and prewired to a steel skid, ready to bolt down to the custom service body, complete with all mechanical, fluid and electrical connections to the truck chassis cab.

The Service Body Skid includes an HPU (Hydraulic Power Unit) with a HTMA Class II circuit producing up to 8 gpm @ 2000 psi, a 10 gallon hydraulic reservoir, and a fan cooled heat exchanger to operate the ERV-750 and optional TM-7. A 50 foot (15.2m) hydraulic hose reel is also included to run accessory hand tools such as breakers, slurry pumps and saws.

Other equipment includes a powerful 500 CFM-11 inHg vacuum, a 250 gallon spoils tank utilizing Wachs exclusive hydraulic slide, tilt & rear discharge, with a power latching rear door, and a programmable arrow board and work lights. Also standard is a 2.5 GPM @ 3000 psi pressure washer system and 80 gallon water tank, with an optional hot water system for colder climes.

VALVE MAINTENANCE TRUCK

UTILITY TRUCK UPFITTING SERVICE

Knapheide / Wachs Valve Maintenance Truck Service Body
with Integrated Wachs Service Body Valve Maintenance Skid

Custom service body has ample
storage with LED Lighting

Multiple steel bins and storage
areas hold accessory tools

Valve maintenance truck includes a
powerful inverter and multiple batteries

Lockable cabinet can store a
DWG 208 pipe saw sold separately

Custom Service Body and Skid System

Wachs Utility Products has partnered with Knapheide to create the most efficient and complete valve maintenance truck, delivering unparalleled power and versatility and equipped with maximum storage for an efficient workflow. There are two main components, a Wachs custom designed service body built by Knapheide finished in Oxford White, and Wachs Service Body Valve Maintenance Skid, designed and built for this unique application.

To begin, order your cab chassis fleet vehicle with a minimum rating of 19,500 GVRW, a cab to axle length of 84 inches, plus rear camera and upfitting switches, drop shipped to Knapheide. When specifying your vehicle, a 220 amp alternator is the minimum for the custom service body's included power invertor; a high capacity or dual alternator arrangement is best.

Body to Truck Upfitting

Upon delivery of your vehicle, Knapheide will install our custom valve maintenance truck service body onto your cab and chassis, then install Wachs Service Body Skid to the service body, complete with all mechanical, fuel and electrical connections.

Wachs Service Body Skid, combined with our customized service body professionally upfitted by Knapheide, creates the industry's most advanced valve maintenance truck. Just specify and order your truck cab and chassis, have it delivered to Knapheide, and we do the rest. If you’re looking for the most powerful, best equipped, most versatile rolling valve maintenance truck on the planet, look no further.

CHOOSING YOUR PLATFORM

TRAILER OR SKID

TRAILERS. SKIDS. TRUCKS.

> "We feel Wachs is the only game in town that provides reliable service and can integrate with most asset management systems. We prefer trailer mounted equipment for better program management, so vehicle down times do not impact the availability of our valve maintenance equipment."
>
> Tony S., Utilities Field Supervisor
> Charlotte County Utilities

Moving Beyond Handhelds

When the decision is made to progress beyond a handheld or truck mounted exerciser to a full valve maintenance system, the next question becomes choosing between a self-contained trailer, a skid that bolts to your flatbed truck, or the no compromise choice, a custom built Knapheide truck. Whatever your requirements or budget, Wachs has the right tool for you. There is no wrong answer, simply spec the option that fits your needs and budget now, or plan for the long term.

Wachs VMT Valve Maintenance Trailers offer the advantage of any medium duty truck being able to tow it, so there's no need to have a dedicated vehicle exclusive to the task. This is often preferred by small to mid-size municipalities with limited fleet units.

Valve Maintenance Trucks

Wachs VMS Valve Maintenance Skid mounted systems are a popular option, often selected by larger cities with bigger fleets. Wachs skid systems pre-install and pre-wire all the components to a metal skid platform that is easily installed on any flatbed truck. It's a ready-to-run system that only requires mounting, eliminating excess labor expense.

For the ultimate truck mounted system, consider our Custom Valve Maintenance Truck and skid system pictured above. Starting with your furnished cab and chassis, Knapheide installs a Wachs custom service body, then installs the Wachs Service Body Valve Maintenance Skid complete with all mechanical, fluid and electrical connections. It's a powerful and practical valve maintenance truck that is the pinnacle of its type.

VALVE MAINTENANCE SYSTEMS

STANDARD & OPTIONAL EQUIPMENT

Utility Products
The Valve Maintenance Experts™

Contact your Wachs representative for additional details

TRAILER SYSTEMS					SKID SYSTEMS		
STANDARD BUILDER	GRAND LX	STANDARD LX	COMPACT LX		STANDARD LX	STANDARD BUILDER	SERVICE BODY
VALVE EXERCISERS							
●	●	●	○	ERV-750 extended reach, 750 ft-lb valve exerciser	●	○	●
/	/	●	/	TM-7 Plus 1500 ft-lb valve exerciser with Swivel Deck	/	/	/
/	/	/	/	TM-7 HD Plus 2500 ft-lb valve exerciser	○	○	○
●	●	●	○	Handheld Datalogger / Controller with VITALS & Bluetooth	●	○	●
VACUUM SYSTEM							
/	●	●	○	500 CFM-11 inHg positive displacement vacuum with discharge silencer	●	○	●
/	●	●	○	250 gallon spoils tank with hydraulic powered slide, tilt dump feature	●	○	●
/	○	○	○	150 gallon spoils tank with hydraulic powered slide, tilt dump feature	/	○	/
/	○	○	○	350 gallon spoils tank with hydraulic powered slide, tilt dump feature	/	○	/
/	●	●	○	2 1/2 inch, 1 1/4 inch and 7/8 inch suction wands	●	○	●
/	●	●	○	20 foot suction hose	●	○	●
WASHDOWN SYSTEM							
/	●	●	○	High pressure washer system	●	○	●
/	●	●	○	Fresh water tank	●	○	●
/	●	●	○	Long hydro excavation wand	●	○	●
/	●	●	○	Short wash down wand	●	○	●
/	●	●	○	50 foot retractable water hose reel	●	○	●
/	●	●	○	Primer antifreeze tank	●	○	●
/	/	/	○	Hot Water Heater	○	○	○
HYDRAULIC SYSTEM							
●	●	●	○	HTMA Class II circuit, fan cooled heat exchanger, 8gpm @ 2000psi	●	○	●
●	●	●	○	50 foot hydraulic hose reel	●	○	●
●	●	●	○	10 gallon hydraulic reservoir	●	○	●
LIGHT PACKAGE							
●	●	●	○	Spotlights	●	○	●
●	●	●	○	Arrow board	●	○	●
/	●	●	○	Job box	○	○	/
ENGINES							
/	○	○	○	26 HP Tier 4 compliant Kubota 1.1 L Diesel Engine, I-3 4-stroke, liquid cooled IDI	○	○	○
/	○	○	○	27 HP Kohler overhead cam, air cooled gasoline engine	○	○	○
●	/	/	/	16 HP Briggs and Stratton, air cooled gasoline engine	/	/	/
Other Options							
○	○	○	○	45 lb Hydraulic Breaker	○	○	○
○	○	○	○	Spare Tire	/	/	/

● Standard ○ Optional / Not Available

PIPE SAWS & CUTTERS

SAFER ALTERNATIVES

LOWEST COST PER CUT

Wachs Utility Products pipe saws and cutters are the safest and most dependable in the industry, designed to cold cut steel, ductile, cast iron and most common pipe materials. Products include our famous Trav-L-Cutter, which like all Wachs cutting solutions is mounted to the workpiece. Secured to the pipe by a special tensioning/drive chain, the Trav-L-Cutter drives itself around the pipe as it cuts, keeping the operator at a safe distance.

Another industry standard is Wachs Guillotine reciprocating saw, sometimes called simply the "Wachs Saw". Our family of portable Guillotine pipe saws include models designed to cut pipe ranging from 2 inch - 32 inch diameters, cutting through even the heaviest wall thicknesses or hardest material. In use virtually everywhere, they're strong yet lightweight, simple to mount, simple to operate and simply bulletproof.

Our newest innovation, the DWG (Diamond Wire Guillotine) saws, are available in two models, the DWG 208 and DWG 416. Designed to cut all types of pipe, including mixed media, Wachs DW Guillotines secure safely to the workpiece. Unlike traditional gas powered handheld chop and chain saws, they eliminate the very real danger of power saw "kickback" injuries, a huge safety benefit. Another benefit is the large number of cuts each cutting wire delivers, making for one of the lowest costs per cut in the industry. So don't choose between fast, cheap or safe for your next cutting machine – choose Wachs DW Guillotine and get all three.

> "When it comes to bigger pipe and the possibility of water releasing in the hole, it's easier and safer to use the Trav-L-Cutter, and at times the Guillotine saws. The cuts are more precise and more time efficient, and helps keep our employees out of harm's way."
>
> Paul W., Technical Specialist, Metro Nashville

The Trav-L-Cutter can cut vertically, horizontally or anything in between

TRAV-L-CUTTER SD

PIPE MILLING MACHINE

Newly Improved

Since its introduction in 1949, Wachs Trav-L-Cutter has been a tried and true machine tool used to cold cut pipe and vessels. Newly updated, the Trav-L-Cutter SD or Super Duty replaces the previous model, using beefier components and increased capacities to make the machine even more bullet proof. Identified by its bright red top covers, select Trav-L-Cutter models already in the field can be retrofitted up to SD specifications via an upgrade kit.

Used in every corner of the world, the Trav-L-Cutter utilizes a combination mounting/drive chain that allows the machine to fit on any diameter pipe by simply adding chain sections. It drives itself around the OD of the pipe on the mounting chain while simultaneously cutting. Offered as a Model E with pneumatic drive or a Model HE with sealed hydraulic drive, the Trav-L-Cutter SD is designed to operate horizontally, vertically or anything in between, even when fully submersed. Wachs Trav-L-Cutter SD will accommodate pipe sizes from 6 inch - 72 inch O.D. (DN150–1800) with the addition of additional chain sections.

Guillotine saws feature fast, easy operation and the ability to cut most materials

GUILLOTINE SAW

RECIPROCATING PIPE CUTTER

Highly Versatile

When saws are first mentioned, the saw mentioned first is Wachs Guillotine saw, known colloquially around the world as the “Wachs Saw”. In use virtually everywhere, they’re strong yet lightweight, simple to mount, simple to operate and simply indestructible. Their compact design requires minimal clearances, and features an orbital cutting motion that lifts the blade on the return stroke, dramatically extending blade life.

The Guillotine pipe saw series include models to cut pipe ranging from 2 inch - 32 inch O.D. (DN50-800). The four Guillotine models available, from smallest to largest, are the Super C, Model D, Super D and Goliath. All set up quickly with a positive chain mounting system and easy finger-tip feed control. Available in pneumatic and hydraulic drive options, they cut common pipe material in virtually any position, horizontal, vertical or anything in between.

DW GUILLOTINE 208

DIAMOND WIRE SAW

Convenient carrier for storage and enhanced portability

Arms collapse for use in space restrictive areas

Mounts directly to workpiece for easy single operator use

SAFE. FAST. COMPACT.

Wachs DWG 208 Diamond Wire pipe saw is a faster and safer method of cutting 2 inch - 8 inch (DN50-200) pipe including steel, ductile, cast iron, concrete (CA), poly, PVC and mixed media. Secured to the workpiece, the DWG 208 utilizes a fully enclosed, high speed diamond infused cutting wire that cuts quickly and precisely. Its compact design features stainless steel construction, with a collapsible, folding arm design that allows it to be easily stored and transported.

These saws do not bind like traditional saws, eliminating the “kickback” dangers associated with gasoline powered handheld chain saws or abrasive wheel devices that can occur from pipe compression or shifting. The DWG 208 is hydraulically powered, eliminating the danger of gas fumes collecting when working down in the ground.

Apart from the cutting area, the diamond wire is fully enclosed within the saw for safety. The diamond wire is designed to slightly rotate radially while cutting, allowing all the diamond elements to come into contact with the workpiece. Due to the longevity of the diamond cutting wire, Wachs DWG series saws feature one of the lowest costs per cut in the industry, and a much lower cost of consumables over the life of the machine than other cutting devices. Every DWG 208 saw comes complete with a custom carrier for protection, plus a carrier mounted water tank and spray lubricant.

DW GUILLOTINE 416

DIAMOND WIRE SAW

All controls are easily accessible from the top of the machine on a single side

ADVANCED PIPE CUTTING

The big brother to Wachs DWG 208 diamond wire saw, the DWG 416 is designed for cutting 4” to 16” (DN100-400) pipe including steel, ductile, cast iron, concrete (CA), poly, PVC and mixed media. The DWG 416 features exceptional build quality, with stainless steel and aluminum construction for corrosion resistance, and a collapsible, folding arm design that allows it to be easily transported and stored.

Like all Wachs cutting solutions, the DWG 416 is secured to the workpiece by a quick, secure chain mounting system, eliminating the danger of kickback accidents due to binding from workpiece shifts or compression cuts. Hydraulically powered using a sealed loop, the DWG 416 can operate under the most extreme conditions, including full water immersion, and is ideal for cutting in restrictive spaces.

The DWG series diamond wire is long lasting, giving the DWG 416 one of the lowest costs per cut in the industry. Like the smaller DWG 208, it utilizes a fully enclosed, high speed diamond infused cutting wire that rotates radially while cutting, allowing all the diamond elements to come into contact with the workpiece. Apart from the safety advantages, the lower cost of consumables over the life of the machine compared to handheld devices will offset its higher initial cost.

Top mounted controls for wire speed and feed allow the operator to select the optimum settings for a quick, clean cut. Wachs DWG 416 comes complete with a heavy duty carrier for ease of transport and to protect the saw in transit and storage.

DWG 416 is designed to collapse and fit inside of utility access holes

Sturdy steel carrier houses a portable water source, saw, and lubricant

BEYOND EXERCISERS & SAWS

> "We recently purchased the Valve Nut Rx to save time and money, and it's already paid for itself. It's proven to be a very quick and effective way to replace worn or missing AWWA nuts on water valves, saving the expense of digging them up for repair or replacement."
>
> Paul W., Technical Specialist, Metro Nashville

Single Source Supplier

Wachs offers a full range of accessories designed to enhance your teams productivity in the field, making us your single source for many of the tools needed to maintain your valuable water infrastructure.

Wachs unique Valve Nut Rx system is a prime example of a product often required by crews in the field. It's designed to save time and money by replacing rounded or missing operating valve nuts with new, long-lasting stainless steel replacement nuts, rather than replacing the valve itself. It includes an extractor tool arm to reach down inside the vault to remove the old operating nut, and an installation tool arm to install the new nut on the valve. Stainless steel replacement nuts are available singly or in kits once the initial supply is expended.

Other products include our Valve Box Buddy, an electromagnetic device for lifting steel and iron box covers while standing, designed to help prevent back injuries. Wachs offers two models of hydraulically powered submersible pumps, with the largest able to pump sludge and solids up to 3 inches. To power these and other hydraulic tools including our hydraulic breaker and replacement points, chisels and cutters, we offer two hydraulic power units.

Wachs telescoping and compact valve keys are available in various lengths and styles to reach down to valve operating nuts. Plus we stock a full range of OEM replacement parts and consumables when needed.

VALVE MAINTENANCE ACCESSORIES

VALVE BOX ACCESSORIES

VALVE NUT RX

In case of an emergency such as a main break, closing the valve is critical in reducing water loss and performing repairs urgently. Save time and money by replacing rounded or missing operating valve nuts with new long-lasting stainless steel replacement nuts. Avoid complete valve removal. The Valve Nut RX is your perfect solution to prevent tearing up your streets, customer service shut downs and having to dig up operable valves.

Wachs Valve Nut Rx kit provides everything needed for successful nut replacement.

Removing the worn nut is as easy as lowering the Nut Extractor; Set, Lock and Lift.

Kit Includes

- Extraction Set
- Emergency Nuts (#1-10)
- Hardware Tool Box
- Nut Sizing Template
- Drill Kit for Stem Tapping

Accessories

- Standard Nuts (#1-10)
- Extension Kit

Emergency Nuts (#1-10)

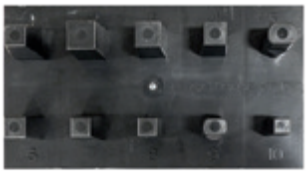

Nut Sizing Template

Hardware Tool Box

Drill Kit for Stem Tapping

Valve Box Buddy

Lifting and moving utility and valve box covers has never been easier. With the Wachs Valve Box Buddy, an operator can comfortably lift up to a 60 lb cover with little effort, thanks to the increased leverage produced by the lifting shaft. The ergonomic handle twists to allow engaging and disengaging of the lifting magnet when not in use.

Features

- Portable magnetic lifter for easy removal of cast iron utility & valve box covers
- Strong magnetic field penetrates textured surfaces
- Allows the operator to lift and move covers
- Easy to use on/off locking handle for safety
- Rated for small cast iron covers up to 60 lb
- Lightweight – under 11 pounds

VALVE MAINTENANCE ACCESSORIES

HYDRAULIC ACCESSORIES

WDP 3500 Pump

WTP 4800 Trash Pump

Wachs HPU-750

Wachs HPU 18

Wachs rugged hydraulically powered pumps feature heavy duty cast iron and stainless steel construction for durability. Able to fit into tight places, they are self priming for ease of use. They require a hydraulic power source (not included, sold separately) with a 7-12 GPM (26.5 - 45 LPM) output.

WDP 3500

The WDP 3500 pump is capable of discharging water and solids up to .375 inch (9.5mm) quickly and quietly. It features a direct drive hydraulic motor for continuous use. With no spindle bearings requiring periodic lubrication, it can safely be run dry without damage. Discharges 500 GPM (1890 LPM) of water at a 40 foot (12.2M) head. Draws water down to 3.5 inch (8.9cm)

WTP 4800

The WTP 4800 trash pump is capable of pumping water, slurries, gravel, sludge and solids up to 3 inch (7.6cm) diameter. It features a free flow impeller with a direct drive hydraulic motor for continuous use. Discharges 800 GPM (3028 LPM) at a 10 foot (2.5M) head.

HPU-750

Wachs HPU-750 hydraulic skid mounted unit is powered by a 16 HP V-Twin gas engine with electric start, and a heavy duty oil cooler and auxiliary circuit, rated for 8 GPM @ 1800 PSI (30 LPM @ 124 BAR).

HPU 18

The HPU 18 is a CE compliant hydraulic cart powered by an 18 HP (13.25kW) V-Twin gas engine with electric start. It will power both HTMA Class I & II tools. A selector valve on the control panel sets the pump to deliver either 8 GPM (30 LPM) @ 2,000 PSI (140 bar) or 5 GPM (20 LPM) @ 2,000 PSI (140bar).

Hydraulic Breaker ▸

45 pound Hydraulic Breaker with EX Ride and 1-1/8 inch hex bit capacity

- Operate from any HTMA Class II hydraulic circuit
- 1,800 blows per minute
- Perfect for cutting curbs, sidewalks and asphalt

Hydraulic Breaker

Long Chisel

Moil Point

Asphalt Cutter

VALVE MAINTENANCE EXPERTS

WE'RE HERE TO HELP

TAKE THE NEXT STEP

> "With Wachs equipment, our valves are easier to operate, we have less failure rate while exercising, and we can now identify broken valves in our system. This has saved us a lot of time and money not having to replace the valves, being able to work them and make them functional again. I've recommended Wachs equipment to four other municipalities...it's second to none."
>
> Robby P., Superintendent,
> Manatee County Water Distribution

When you're ready to take the next step, contact the Wachs representative nearest you. Our Sales, Authorized Dealer and Customer Service Teams are a great resource, combining decades of experience in valves and pipe dating back to the introduction of the ground-breaking Trav-L-Cutter back in 1949.

They're experts in assessing your needs, working within budgets, writing specifications, and working with your procurement and purchasing departments. They would welcome a call to discuss your plans, visit your organization, either in person or via our Wachs@Work fully interactive video conference, to demo the equipment you're interested in so you can see the quality for yourself.

Making Your Crew Valve Maintenance Experts

Access to the full range of Wachs Utility Products expertise doesn't end at the purchase. Our team takes pride in our strong equipment warranties, and will assist in training and putting your new equipment in service. We offer readily available spares and consumables. Continual product improvements in hardware and software ensure the equipment you buy today will remain fully functional for years.

It's not enough that the Wachs team are The Valve Maintenance Experts®. Using Wachs equipment, from the simplest handheld exerciser to the mighty Knapheide custom upfitted truck, will enable your crew to become valve experts too. Got a problem valve, give us a call. As we like to say, "If the valve's not broke, we can probably turn it." Take the next step and contact us - we're here to help.

Utility Products | 600 Knightsbridge Parkway | Lincolnshire, IL 60069 | 847-537-8800 | sales@turnvalves.com | turnvalves.com

Contact your local Wachs Utility Products representative for additional information or to request a product demonstration.

UNITED STATES

Wachs Utility Products
E.H. Wachs® Headquarters
600 Knightsbridge Parkway
Lincolnshire, IL 60069
T: +1.847.537.8800
F: +1.847.520.1147
Toll Free: 800.323.8185

Southeast
Sales, Service & Rental Center
171 Johns Road, Unit A
Greer, South Carolina 29650
T: +1.864.655.4771
F: +1.864.655.4772

Houston (Pasadena)
Sales, Service & Rental Center
3327 Daisy Street
Pasadena, Texas 77505
T: +1.713.983.0784
F: +1.713.983.0703

Northwest
Sales, Service & Rental Center
2056 NE Aloclek Dr, Suite 314
Hillsboro, Oregon 97124
T: +1.503.941.9270
F: +1.971.727.8936

Northeast
Sales, Service & Rental Center
1001 Lower Landing Rd, Suite 208
Blackwood, New Jersey 08012
T: +1.856.579.8747
F: +1.856.579.8748

Gulf Coast
Sales, Service & Rental Center
2220 South Philippe Avenue
Gonzales, LA 70737
T: +1.225.644.7780
F: +1.225.644.7785

West Coast
Sales, Service & Rental Center
4300-4308 Resnik Ct Suite 207
Bakersfield, California 93313
T: +1.760.330.3833

CANADA

Wachs Canada Ltd®
Eastern Canada Sales, Service & Rental Center
1250 Journey's End Circle, Unit 5
Newmarket, Ontario L3Y 0B9
Canada
T: +1.905.830.8888
F: +1.905.830.6050
Toll Free: 888.785.2000

Wachs Canada Ltd®
Western Canada Sales, Service & Rental Center
5411 82 Ave NW
Edmonton, Alberta T6B 2J6
Canada
T: +1.780.469.6402
F: +1.780.463.0654
Toll Free: 800.661.4235

GERMANY

ITW-OCW Europe Headquarters
Orbitalum Tools GmbH®
Josef-Schüttler-Straße 17
Singen D78224 Germany
T: +49 (0) 77 31 - 792 0
F: +49 (0) 77 31 - 792 500

UNITED KINGDOM

Wachs UK®
UK Sales, Service & Rental Centre
Units 4 & 5 Navigation Park
Road One, Winsford Industrial Estate
Winsford, Cheshire CW7 3RL
United Kingdom
T: +44 (0) 1606 861 423
F: +44 (0) 1606 556 364

UNITED ARAB EMIRATES

Wachs Middle East & Africa Operations®
PO Box 262543
Jebel Ali Free Zone South
Dubai FZS 5, AC06
United Arab Emirates
T: +971 4 88 65 211
F: +971 4 88 65 212

INDIA

ITW India Private Limited
Indialand Global Industrial Park
Sr. No.234/235/245, Plot 8, Gala No. 7
Hinjawadi-Phase-1
Tal-Mulshi, Pune 411057 India
T: +91 40 30261812
F: +91 40 30480815

CHINA

ITW Welding China
Wachs / Orbitalum Sales
New Caohejing International Business Centre
Room 2801-B, Building B
No 391 Gui Ping Road
Shanghai 200052, China
T: +86 (0) 21 52 30 37-51
F: +86 (0) 21 52 30 37-58

WACHS **Utility Products**
The Valve Maintenance Experts™

turnvalves.com

© 2021 UTY-001 0421

LETTER TO THE LIVONIA CITY COUNCIL

19.

DPW
April 29, 2025

MEETING DATE	PRESENTED BY
S051925/R060225	Douglas L. Moore, MSA, Assistant Director of Public Works

AGENDA ITEM

AWARD OF BID: Department of Public Works, re: for the purchase and installation of a replacement heat pump system at the 16th District Court, from budgeted funds.

BACKGROUND DETAILS

It has been determined that the HVAC unit at the 16th District Court has outlived its usefulness due to constant repairs and limited availability of parts due to its age. As such, the Department of Public Works went out to bid on replacing the current unit. The bid request was published on MITN August 14, 2024, with the submitted bids being opened on September 10, 2024. There were two bidders. The cost of the project was much higher than expected when the bids were received and funds had to be identified and transferred to the appropriate GL# in order to proceed with the project.

During this time, the pricing originally bid changed due to the cost of goods. The winning bidder increased the price of the project. However, their bid is still well below the second bidder's quote.

PREFERRED COUNCIL RECOMMENDATION/RESOLUTION (Please complete this field. Attachments are not to be used in lieu of the recommendation)

Approve the purchase and installation of a new Heat Pump System for the 16th District Court from De-Cal Service Group, 24659 Schoenherr Road, Warren, MI 48089 in the amount of $55,870.00 from funds budgeted in GL# 401-000-987-000.

SPECIFIC NAME OF PRODUCT AND NUMBER TO BE PURCHASED (if more than one)

Heat Pump System VRV, Emerion, 460V (RXYQ120AAYDA).

CONTRACT: Amount and/or purchase price and length of contract (with dates if applicable)

$55,870.00

DETAILED WORK BEING PERFORMED

Vendor to remove old heating/cooling system, and provide and install a new heat pump, VRV,

Emerion, 460V (RXYQ120AAYDA).

FISCAL CONSIDERATIONS (Amount requested and Account(s) used. If applicable, Grant Funding information)

401-000-987-000
$55,870.00

ACCEPTANCE OF BID (Please detail the following: Why accepted, why not lowest bidder, company name, contact person, full address)

Two bidders responded to the request for bid, awarded to lowest bidder:

De'Cal Service Group	$55,870.00
CSM Mechanical	$68,620.00

REASON TO WAIVE BID PROCESS (Emergency, Professional services, No advantage to City and why, Consortium package, etc): n/a

ATTACHMENTS

1. De_Cal_City of Livonia Final-FORM OF PROPOSAL_REVISED_AUGUST 29 2024 (2)
2. 16th District Court HVAC bid tab
3. De_Cal itemized bid
4. 16th District Court HVAC bid tab

APPROVED BY

Douglas L. Moore, MSA, Assistant Director of Public Works — Date: April 30, 2025

Don Rohraff, Director of Public Works — Date: May 07, 2025

Connie Kumpula, Chief Accountant — Date: May 09, 2025

Debra Peck Lichtenberg, CPA, Finance Director — Date: May 09, 2025

Date: May 09, 2025

Carter Fisher, City Attorney

Date: May 09, 2025

Maureen Miller Brosnan, Mayor

FORM OF PROPOSAL
For
16th District Court
REPLACEMENT OF THE HEAT PUMP SYSTEM

Bid of DE-CAL LLC hereinafter called Bidder, organized and existing under the laws of or a resident of the State of Michigan, doing business as "a corporation" *.

* Insert as applicable: “a corporation”, “a partnership” or “an individual”

TO THE CITY OF LIVONIA, MICHIGAN, hereinafter called OWNER:

The undersigned as Bidder hereby declares: that this Bid is made in good faith without fraud or collusion with any person or persons bidding on the same Contract; that the Bidder has read and examined the Notice to Bidders, Instructions to Bidders, Bid, General Conditions, Supplementary Conditions, Agreement, Forms of Proposal, Bond, and understands all of the same; that the Bidder or its representative has made personal investigation at the site and has become fully familiar with regard to the conditions to be met in the execution of this Contract, and the undersigned proposes to furnish all labor, materials, tools, power, transportation, and construction equipment necessary for the construction of the Project and performing related work in full accordance with the aforesaid Contract Documents, including any and all Addenda officially issued, their receipt of which is hereby acknowledged:

Addendum No.	Addendum Date
NONE	

The Contract will be awarded to the lowest responsive, responsible Bidder based on the unit prices for all Work specified.

The Bidder agrees to complete the Project for the following unit prices:

BID WITH EXISTING R-410A REFRIGERANT

Item No.	Item Description	Qty	Unit	Unit Price ($)	Total Price ($)
1	MATERIAL COST	1	ea.	$ 36,360.00	$ 36,360.00
2	LABOR COST	1	ea.	$ 14,340.00	$ 14,340.00
				TOTAL BID COST	$ 50,700.00

ALTERNATE BID – WITH NEW R-454B REFRIGERANT					
Item No.	**Item Description**	**QTY**	**Unit**	**Unit Price ($)**	**Total Price ($)**
1	MATERIAL COST	1	ea.	$	$ N/A
2	LABOR COST	1	ea.	$	$ N/A
				TOTAL BID COST	$ N/A

If the foregoing Bid shall be accepted by the OWNER, the undersigned agrees to enter into the attached form of Agreement within ten (10) days after receiving notice of such acceptance, will furnish the OWNER satisfactory bonds and certificates of insurance coverage, and will complete the Project, at the price and within the time stated in this Bid.

The undersigned further agrees that if the foregoing Bid shall be accepted, work will commence immediately after the Contract has been awarded, the Agreement executed, and a Notice to Proceed received. **The undersigned shall complete the Work to Substantial Completion within 30 days of notice to proceed, and to Final Completion within 45 days of notice to proceed.** Substantial completion shall be met when all the pathways are open for use by the public. Final completion shall be met when all restoration items and punch-list work items have been completed.

The undersigned attaches hereto its Bid security, as required by the Notice to Bidders and Instructions to Bidders. The undersigned agrees that in case it shall fail to fulfill its obligations under the foregoing Bid, and/or shall fail to furnish bonds, as specified, the OWNER may, at its option determine that the undersigned has abandoned its rights and interests in such Contract and that its Bid security accompanying its Bid; has been forfeited to the said OWNER, but otherwise the Bid security shall be returned to the undersigned upon the execution of the Contract and the acceptance of the bonds.

The undersigned also agrees that for each and every calendar day that he may be in default of Substantial Completion of the Work, within the time specified in this Bid, the OWNER will suffer a damage of **Two Hundred and Fifty dollars ($250.00)** per day and said OWNER shall be compensated therefore at the rate as liquidated damages in accordance with the Agreement.

In submitting this Bid, it is understood that the right is reserved by the OWNER to accept any bid, to reject any or all Bids, and to waive irregularities in bidding in the interest of the OWNER.

SUBMITTED on 9/9/2024 BY: DE-CAL LLC

Date* Name of Bidder*

24607 Schoenherr Rd
Street*

Mike Vigus
Signature

Warren, MI 48089
City, State, ZIP*

Mike Vigus/ Account Manager/Estimator
Name and Title of Signatory*

248-709-5147
Telephone Number*

NONE
Facsimile Number*

*Typed or printed in ink.

Form of Proposal and all other bid documents to be submitted electronically following the instructions provided in the "Notice to Bidders" and "Instruction to Bidders" sections.

BID OPENING

16th District Court Heat Pump Bid

BID DUE DATE 9/9/2024

VENDOR NAME	De-Cal Inc.	CSM Mechanical
CITY/STATE	24659 Schoenherr Rd., Warren, MI 48226	
TOTAL Bid with Existing R-410A Refrigerant	$50,700/ Updated quote, 4/15/25, **$55,870**	$68,620.00
TOTAL Alternative Bid with New R-454B Refrigerant	None	None

CITY REPRESENTATIVES: LESLIE ROTHROFF, OFFICE OF THE CITY CLERK

GUS KANDAH, PURCHASING MANAGER

24659 Schoenherr Rd.
Warren, MI 48089
586.619.0281
586.754.4371 fax

PROPOSAL

*Quote #**P324153*** **Date 9/9/2024**

City of Livonia-16th District Court

32765 Five Mile Rd
Livonia, MI 48154.

Project Name: 16th District Court Replacement of Heat Pump Systems

- Description of work -

- Provide all labor and material to
  - Lock out tagout the existing outdoor unit and indoor highwalls.
  - Pull the refrigerant and test the oil for acid.
  - Disconnect the piping and electrical from the outdoor unit.
  - Cleaning of the equipment on and off the roof.
  - Furnish and install One (1) new VRV, Emerion, 460V (RXYQ120AAYDA).
  - Furnish and install Five (5) new 2.0 – Ton high wall mount (FXAQ24PVJU).
  - Furnish and install Five (5) new condensate pumps.
  - Furnish and install Five (5) new navigation remote controllers, wired.
  - Replace the Four (4) branch line REFNET splitters and reinsulate.
  - Reconnect the piping and electrical.
  - Leak check the system with nitrogen, triple evacuation.
  - Charge with new R-410A refrigerant.
  - Start up and check operations.
  - Permit.

Equipment Lead Time: 2-6 Weeks
Payment Terms: Net 30 days
Quotation: Valid for 30 days

- Exclusions - Overtime, acid burnout flush kits and flush labor, additional parts other than listed above, site conditions that would cause delay to the above work & any other service work other than listed above.

The above work will be done in a safe and workmanlike manner for the sum of **$50,700.00**

Upon Approval, Please Sign and Return: Signature: _____

Date: _____

24659 Schoenherr Rd.
Warren, MI 48089
586.619.0281
586.754.4371 fax

PROPOSAL *Quote* ***#P324153*** ***Date 9/9/2024***

Respectfully submitted,

Mike Vigus

De-Cal, Inc.-Service Group
Mike Vigus-Account Manager/Estimator
(Office) 586-619-0281
(Cell) 248-709-5147
(E-Mail) mvigus@de-cal.com

Any alteration or deviation from the above specifications involving extra costs will be executed only upon written orders and will become an extra charge over and above the estimate. *This proposal does not constitute an agreement. De-Cal Service Group is a Division of De-Cal, Inc.

BID OPENING

16th District Court Heat Pump Bid

BID DUE DATE 9/9/2024

VENDOR NAME	De-Cal Inc.	CSM Mechanical
CITY/STATE	24659 Schoenherr Rd., Warren, MI 48226	
TOTAL Bid with Existing R-410A Refrigerant	$50,700/ Updated quote, 4/15/25, **$55,870**	$68,620.00
TOTAL Alternative Bid with New R-454B Refrigerant	None	None

CITY REPRESENTATIVES: LESLIE ROTHROFF, OFFICE OF THE CITY CLERK

GUS KANDAH, PURCHASING MANAGER

LETTER TO THE LIVONIA CITY COUNCIL

20.

DPW
April 28, 2025

MEETING DATE	PRESENTED BY
S051925/R060225	

AGENDA ITEM

REQUEST FOR AUTHORIZATION TO WAIVE THE SEALED BID PROCESS AND PURCHASE FROM SOLE SOURCE PROVIDER: Department of Public Works, re: for the purchase of stormwater, water main and sanitary manhole-related items in an amount not to exceed $150,000.00 annually, for the period of July 1, 2025, to June 30, 2026.

BACKGROUND DETAILS

For many years, the Department of Public Works has made purchases from the above-referenced vendor. EJ USA, Inc. manufacturers and supplies fire hydrants, water main valves, sanitary and storm structure frames and covers (the manhole covers are cast at the foundry with the City logo and name). These items are manufactured in the State of Michigan and supplied solely by EJ USA, Inc.

We have checked the unit prices charged for these items and found them to be comparable with those paid by other municipalities. This year's quote has a 0% increase from last year. This pricing is the same across the board for all communities using comparable products. We note that the City would experience large up-front charges to go to another foundry and set up the City's complete casting specifications. In addition, there would be a large increase in the freight charges the City would encounter going to a new manufacturer located outside the State of Michigan on every order placed. EJ USA, Inc. has a distribution center located in Oak Park and has been very responsive in the past, meeting the City's needs.

PREFERRED COUNCIL RECOMMENDATION/RESOLUTION (Please complete this field. Attachments are not to be used in lieu of the recommendation)

It is the request of the Department of Public Works that Council waive the formal bidding process in accordance with Section 3.04.140.E.3 of the Livonia Code of Ordinances, as amended, since no advantage to the City would result from competitive bidding in this situation. Further, authorize the Mayor and City Clerk to execute a one-year contract for and on behalf of the City of Livonia, with **EJ USA, Inc**., 13001 Northend Avenue, Oak Park, Michigan 48237, for the purchase of stormwater, water main and sanitary manhole related items, in an amount not to exceed $150,000.00 for the period of **July 1, 2025, through June 30, 2026**; FURTHER; the Council does hereby authorize an expenditure in an amount not to exceed $150,000.00 from funds already budgeted in Account Nos. 592-559-787-050 (Water Main Supply), 592-559-787-060 (Water Valves and Gate Wells), 592-559-787-070 (Hydrant Supply) and 592-559-796-000 (Sanitary Supply) for this purpose; FURTHER, the

Council does hereby authorize such action without competitive bidding for the reasons indicated in the aforesaid communication, and such action is taken in accordance with Section 3.04.140.E.3 of the Livonia Code of Ordinances, as amended.

SPECIFIC NAME OF PRODUCT AND NUMBER TO BE PURCHASED (if more than one)

Fire hydrants, water main valves, sanitary and storm structure frames and covers (the manhole covers are cast at the foundry with the City logo and name). Exact quantities vary from year-to-year, based on road projects, new subdivision builds, etc.

CONTRACT: Amount and/or purchase price and length of contract (with dates if applicable)

Contract pricing valid from July 1, 2025 to June 30, 2026

DETAILED WORK BEING PERFORMED

n/a

FISCAL CONSIDERATIONS (Amount requested and Account(s) used. If applicable, Grant Funding information)

$150,000.00 from funds already budgeted in Account Nos. 592-559-787-050 (Water Main Supply), 592-559-787-060 (Water Valves and Gate Wells), 592-559-787-070 (Hydrant Supply) and 592-559-796-000 (Sanitary Supply)

ACCEPTANCE OF BID (Please detail the following: Why accepted, why not lowest bidder, company name, contact person, full address)

n/a

REASON TO WAIVE BID PROCESS (Emergency, Professional services, No advantage to City and why, Consortium package, etc): Waive the formal bidding process in accordance with Section 3.04.140.E.3 of the Livonia Code of Ordinances, as amended since no advantage to the City would result from competitive bidding.

ATTACHMENTS

1. One Year Bid July 1 2025 - June 30 2026-Quote_2025-04-21 143221

APPROVED BY

Ryan Ferrell

Ryan Ferrell, Assistant Director of Public Works

Date: May 07, 2025

Don Rohraff, Director of Public Works

Date: May 07, 2025

Connie Kumpula

Date: May 09, 2025

Connie Kumpula, Chief Accountant

Debra A. Lichtenberg

Date: May 09, 2025

Debra Peck Lichtenberg, CPA, Finance Director

Maureen Miller Brosnan

Date: May 09, 2025

Maureen Miller Brosnan, Mayor

800 268 4653
ejco.com

Quotation
00768375

Account Name	City of Livonia DPW	**Quote Name**	One Year Bid July 1 2025 - June 30 2026-Quote
Ship to	WATER and SEWER FIELD OPERATION 12973 FARMINGTON ROAD, Livonia, 48150	**Created Date**	04/21/2025
		Expiration Date	05/21/2025
Requested By		**Prepared By**	Wesley Krum
Business Phone	734-466-2200	**Email**	wes.krum@ejco.com
Email		**Phone**	(248) 546 2004

Quantity	Product No.	Description	Notes	Line Charge	Sales Price (USD)	Total Price (USD)
1	INFO	-	Prices are good for One Year. July 1, 2025 - June 30, 2026		1.00	1.00
1	INFO	-	RW Valves Open Right		1.00	1.00
1	2200310	3" Resilient Wedge Gate Valve MJ 2" Operating Nut OR			589.51	589.51
1	2200410	4" Resilient Wedge Gate Valve MJ 2" Operating Nut OR			655.02	655.02
1	2200610	6" Resilient Wedge Gate Valve MJ 2" Operating Nut OR			824.70	824.70
1	2200810	8" Resilient Wedge Gate Valve MJ 2" Operating Nut OR			1,327.89	1,327.89
1	2201010	10" Resilient Wedge Gate Valve MJ 2" Operating Nut OR			2,070.83	2,070.83
1	2201610	16" Resilient Wedge Gate Valve MJ 2" Operating Nut OR			8,782.98	8,782.98
1	INFO	-	RW Tapping Valves Open Right		1.00	1.00
1	2500410	4" Resilient Wedge Gate Valve MJ x Tap 2" Operating Nut OR			824.72	824.72
1	2500610	6" Resilient Wedge Gate Valve MJ x Tap 2" Operating Nut OR			1,164.14	1,164.14
1	2500810	8" Resilient Wedge Gate Valve MJ x Tap 2" Operating Nut OR			1,728.34	1,728.34
1	2501010	10" Resilient Wedge Gate Valve MJ x Tap 2" Operating Nut OR			2,627.49	2,627.49
1	2501210	12" Resilient Wedge Gate Valve MJ x Tap 2" Operating Nut OR			3,930.08	3,930.08
1	2501610	16" Resilient Wedge Gate Valve MJ x Tap 2" Operating Nut OR			10,259.22	10,259.22
1	INFO	-	Hydrants		1.00	1.00
1	54033D	5BR250 Hydrant 5'6" MJ 1 1/8" Pent Carroll 2DTP D Dome 2-1 3 3/4" Pumpers OL Red	5BR250		3,153.07	3,153.07
1	83401D	5BR250 DFD Conversion Hydrant 5'6" 1 1/8" Pent Carroll D Dome 2-1 3 3/4" Pumpers OL Radiant Red	DFD Conversion Hydrant		3,761.03	3,761.03
1	INFO	-	Valves Box and Valve Box Parts		1.00	1.00

EJ USA, Inc. Terms and Conditions apply, which are located at https://ejco.com/ustc. Material takeoff quantities not guaranteed. Price subject to change.

Quantity	Product No.	Description	Notes	Line Charge	Sales Price (USD)	Total Price (USD)
1	85604566	8560 Screw Type 3 Piece Valve Box Set D Box: #4 Base, 30B Bottom, 26T Top, Water Cover, Black Asphaltic Coated			291.41	291.41
1	85508009	8550 Screw Type Valve Box Extension Riser #69, 16-1/2" Tall for 2-1/2"-9" Height Adjustment, Black Asphaltic Coated			77.34	77.34
1	85508018	8550 Screw Type Valve Box Extension Riser 18A, 22-1/2" Tall for 2-1/2" - 15" Height Adjustment, Black Asphaltic Coated			89.38	89.38
1	85508024	8550 Screw Type Valve Box Extension Riser, 28-1/2" Tall for 2-1/2" - 21" Height Adjustment, Black Asphaltic Coated			94.53	94.53
1	85008010	8500H Solid Round Gray Iron 1" Valve Box Adjustment Riser for 5-1/4 Valve Boxes			29.81	29.81
1	85008015	8500H Solid Round Gray Iron 1-1/2" Valve Box Adjustment Riser for 5-1/4" Valve Boxes, Cover 7-5/16" Dia x 2-1/16" Seat			36.10	36.10
1	85008020	8500H Solid Round Gray Iron 2" Valve Box Adjustment Riser for 5-1/4" Valve Boxes			40.80	40.80
1	85008030	8500H Solid Round Gray Iron 3" Valve Box Adjustment Riser for 5-1/4" Valve Boxes with Cover 7-5/16" Diameter x 2-1/16" Seat			51.78	51.78
1	85008040	8500H Solid Round Gray Iron 4" Valve Box Adjustment Riser for 5-1/4 Valve Boxes			62.77	62.77
1	85008060	8500H Solid Round Gray Iron 6" Valve Box Adjustment Riser for 5-1/4" Valve Boxes with Cover 7-5/16" Diameter x 2-1/16" Seat			83.17	83.17
1	INFO	-	DWS Seal Plates		1.00	1.00
1	INFO	-	4" Seal Plate		1.00	1.00
1	00942230	4D7SEAL PLT BSHG ASY			360.63	360.63
1	00942231	4D SEAL PLT GKT			12.85	12.85
1	00946565	O-RG I-218 UL 1/8 1-1/4			3.63	3.63
1	INFO	-	6" Seal Plate		1.00	1.00
1	00942330	6D7SEAL PLT BSHG ASY			216.49	216.49
1	00942331	6D SEAL PLT GKT			7.37	7.37
1	00944421	O-RG I-220 UL 1/8 1-3/8			4.09	4.09
1	INFO	-	8" Seal Plate		1.00	1.00
1	00942430	8D7SEAL PLT BSHG ASY			234.00	234.00
1	00942431	8D SEAL PLT GKT			11.04	11.04
1	00942538	O-RG I-222 UL 1/8,1-1/2			0.32	0.32
1	INFO	-	12" Seal Plate		1.00	1.00
1	00942630	12D7 SL PLT BSHG ASY			277.81	277.81
1	00942631	12D SEAL PLT GKT			4.25	4.25
1	00942639	O-RG I-225 1/8 1-7/8			2.55	2.55
1	INFO	-	16" Seal Plate		1.00	1.00
1	00942730	16D7 SL PLT BSHG ASY			412.13	412.13
1	00942731	16D SEAL PLT GKT			13.17	13.17
1	00942739	O-RG I-227 1/8 2-1/8			1.94	1.94

EJ USA, Inc. Terms and Conditions apply, which are located at https://ejco.com/ustc. Material takeoff quantities not guaranteed. Price subject to change.

Quantity	Product No.	Description	Notes	Line Charge	Sales Price (USD)	Total Price (USD)
1	INFO	-	Castings		1.00	1.00
1	INFO	-	Manhole Risers		1.00	1.00
1	00100292	1000H Solid Round Gray Iron 1-1/2" Adjustment Riser for Cover with 23" Diameter x 1-1/4" Seat Thickness, Black Asphaltic Coated			194.72	194.72
1	00100293	1000H Solid Round Gray Iron 2" Adjustment Riser for Cover with 23" Diameter x 1-1/4" Seat Thickness, Black Asphaltic Coated			223.44	223.44
1	00100295	1000H Solid Gray Iron 2-1/2" Adjustment Riser for Cover 23" Diameter x 1-1/4" Seat Thickness, Black Coated			237.79	237.79
1	00100296	1000H Solid Round Gray Iron 3" Adjustment Riser for Cover with 23" Diameter x 1-1/4" Seat Thickness, Black Asphaltic Coated			248.01	248.01
1	00100298	1000H Solid Round Gray Iron 4" Adjustment Riser for Cover with 23" Diameter x 1-1/4" Seat Thickness, Black Asphaltic Coated			364.88	364.88
1	00104298	1040H Solid Round Gray Iron 2" Adjustment Riser for Cover with 26" Diameter x 1-1/2" Seat Thickness, Black Asphaltic Coated			249.71	249.71
1	00103800	1040H Solid Round Gray Iron 3" Adjustment Riser for Cover with 26" Diameter x 1-1/2" Seat Thickness, Black Asphaltic Coated			262.73	262.73
1	INFO	-	Frames, Grates and Covers		1.00	1.00
1	00104010	1040Z 7" Tall Frame, Black Coated			328.88	328.88
1	00104258	1040C Vented 1 Hole Cover City of Livonia Logo Water, Black Coated			235.51	235.51
1	00104304	1040 7" Tall Bolted and Gasketed Watertight L1 Manhole Assembly City of Livonia Logo Sanitary, Black Coated			627.32	627.32
1	00104291	1040A Solid Cover City of Livonia Logo Sanitary, Black Coated			235.51	235.51
1	00101010	1010Z 7" Tall Frame, Black Asphaltic Coated			434.44	434.44
1	00100010	1000Z 7" Tall Frame, Black Coated			295.18	295.18
1	00100042	1000N Oval 2-5/8" Tall Beehive Style Grate, Dump no Waste! Drains to Waterways, Black Coated			209.03	209.03
1	00100022	1000B Vented 20 Hole Cover, Black Asphaltic Coated			221.71	221.71
1	00508010	5080Z 6-3/4" Tall Catch Basin Frame, Black Asphaltic Coated			327.25	327.25
1	00500050	5000M1 Grate Dump No Waste! Drains to Waterways, Black Asphaltic Coated			179.47	179.47
1	001040074L01	ERGO 24 7" Tall Cam Locking Hinged Manhole Assembly City of Livonia Logo Sanitary Sewer, Black Asphaltic Coated			759.14	759.14
1	00104510	1045Z 7" Tall Frame, Black Coated			286.26	286.26
1	00104610	1046Z 4" Tall Frame, Black Coated			286.26	286.26
1	00104022	1040B Vented 16 Hole Cover, Black Coated			235.51	235.51

EJ USA, Inc. Terms and Conditions apply, which are located at https://ejco.com/ustc. Material takeoff quantities not guaranteed. Price subject to change.

Quantity	Product No.	Description	Notes	Line Charge	Sales Price (USD)	Total Price (USD)
1	00104030	1040M1 Grate, Dump No Waste! Drains to Waterways, Black Coated			219.25	219.25
1	00104042	1040N 3-1/4" Tall Beehive Grate, Dump No Waste! Drains to Waterways, Black Coated			229.41	229.41
1	00104045	1040 O2 6" Tall Beehive Grate, Black Coated			229.41	229.41
1	00500061B01	5000M4 6-3/4" Tall Bolted and Hinged Catch Basin Assembly with Round Base Flange Dump No Waste! Drains to Waterways			561.47	561.47

Notes

Subtotal	51,814.67
Grand Total	51,814.67

EJ USA, Inc. Terms and Conditions apply, which are located at https://ejco.com/ustc. Material takeoff quantities not guaranteed. Price subject to change.

LETTER TO THE LIVONIA CITY COUNCIL

9.

Planning
May 5, 2025

MEETING DATE	PRESENTED BY
S051925/R060225	Mark Taormina, Planning and Economic Development Director

AGENDA ITEM

SITE PLAN PETITION: Planning Commission, re: Petition 2025-03-08-03 submitted by Jonathan Tiwaini of Johnny's Express Car Wash under Consent Judgment Case No. 2:22-cv-12734, requesting site plan approval to construct a car wash facility at 30207 Plymouth Road on the south side of Plymouth Road between Middlebelt Road and Milburn Avenue in the Northeast ¼ of Section 35.

BACKGROUND DETAILS

May 5, 2025

Honorable Members of the City Council
City of Livonia, Michigan

Re: Johnny's Express Car Wash - 30207 Plymouth Road

Dear Council Members:

The Livonia Planning Department has approved the revised plans for Johnny's Express Car Wash according to the Consent Judgment in District Court Case No. 2:22-cv-12734. Site plan approval is granted with the following stipulations:

PREFERRED COUNCIL RECOMMENDATION/RESOLUTION (Please complete this field. Attachments are not to be used in lieu of the recommendation)

1) Adherence to the submitted Site Plan (Sheet C-3 with a revision date of April 16, 2025), prepared by Stonefield Engineering and Design.

2) Adherence to the submitted Landscape Plans (Sheets C-8 and C-9 with a revision date of April 16, 2025), prepared by Stonefield Engineering and Design.

3) Adherence to the submitted Proposed Elevations (Sheet A200 with a revision date of April 17, 2025), prepared by SMA Architects, subject to further review of the building's LED tape lighting by the Planning and Inspection Departments.

4) The three walls of the trash dumpster area shall be constructed of complementary building

materials.

5) All new pole-mounted light fixtures shall not exceed twenty feet (20') in height and shall be directed and shielded to minimize stray light trespassing across property lines and glaring onto adjacent roadways. All exterior lights should be turned off or dimmed between 9:00 p.m. and 7:30 a.m.

6) This approval is only for conforming signage. The Zoning Board of Appeals must review any additional signage.

7) Unless approved by the Inspection Department, any type of exterior advertising, such as promotional flags, streamers, or sponsor vehicles designed to attract the attention of passing motorists, shall be prohibited.

8) The plans referenced in this approving resolution shall be submitted to the Inspection Department with the building permit application(s).

ATTACHMENTS

1. S051925 LTC 2025-03-08-03 (Johnny's Express)
2. 2025-03-08-03_Johnny's Express_Approval

APPROVED BY

Date: May 05, 2025

Mark Taormina, Planning and Economic Development Director

Date: May 07, 2025

Maureen Miller Brosnan, Mayor

PLANNING COMMISSION

IAN WILSHAW, Chairman
GLEN W. LONG, JR., Vice Chairman
SAM CARAMAGNO, Secretary
DAVID BONGERO
PETER H. VENTURA
WAFA DINARO
PATRICK DROZE

MAUREEN MILLER BROSNAN
MAYOR

MARK TAORMINA
PLANNING & ECONOMIC
DEVELOPMENT DIRECTOR

JACOB UHAZIE
ASSISTANT PLANNING DIRECTOR

KRISTOFFER CANTY
PLANNER IV

33000 CIVIC CENTER DRIVE
LIVONIA, MICHIGAN 48154-3097
(734) 466-2290 Fax (734) 466-2108

April 29, 2025

Mr. Joe Delmotte
Stonefield Engineering & Design
555 S. Old Woodward Avenue, Suite 12L
Birmingham, MI 48009

RE: SITE PLAN APPROVAL – PETITION 2025-03-08-03
JOHNNY'S EXPRESS CAR WASH
30207 Plymouth Road, Livonia, MI 48150
District Court Case No. 2:22-cv-12734

Dear Mr. Delmotte,

The Livonia Planning Department has approved the revised plans for Johnny's Express Car Wash according to the Consent Judgment in District Court Case No. 2:22-cv-12734. Site plan approval is granted with the following stipulations:

1) Adherence to the submitted **Site Plan** (Sheet C-3 with a revision date of April 16, 2025), prepared by Stonefield Engineering and Design.

2) Adherence to the submitted **Landscape Plans** (Sheets C-8 and C-9 with a revision date of April 16, 2025), prepared by Stonefield Engineering and Design.

3) Adherence to the submitted **Proposed Elevations** (Sheet A200 with a revision date of April 17, 2025), prepared by SMA Architects, subject to further review of the building's LED tape lighting by the Planning and Inspection Departments.

4) The three walls of the trash dumpster area shall be constructed of complementary building materials.

5) All new pole-mounted light fixtures shall not exceed twenty feet (20') in height and shall be directed and shielded to minimize stray light trespassing across property lines and glaring onto adjacent roadways. All exterior lights should be turned off or dimmed between 9:00 p.m. and 7:30 a.m.

6) This approval is only for conforming signage. The Zoning Board of Appeals must review any additional signage.

7) Unless approved by the Inspection Department, any type of exterior advertising, such as promotional flags, streamers, or sponsor vehicles designed to attract the attention of passing motorists, shall be prohibited.

8) The plans referenced in this approving resolution shall be submitted to the Inspection Department with the building permit application(s).

Sincerely,

Mark S. Taormina, AICP/PCP
Planning & Economic Development Director

cc: Mayor
City Council
Planning Commission
Law
Inspection
Engineering
Jonathan Tiwaini
David Johns

CITY OF LIVONIA, MICHIGAN
APPLICATION FOR SITE PLAN REVIEW & APPROVAL

All petitions for Site Plan Approval shall be filed with the City Planning Commission, 33000 Civic Center Drive, Livonia, MI 48154-3097.

For filing fee see computation below

Date Filed: 3/24/25 Petition 2025-03-08-03

Site Address: 30207 Plymouth Road Sidwell 137-99-004-001

Requesting Approval to Redevelop existing site to provide auto wash and accessory vacuum spaces

Applicant: Jonathan Tiwaini Business/Company: _____

Applicant's Address: _____ City: _____ State: _____ Zip Code: _____

Applicant's Phone # (248) 910-1850 Applicant's Email jt@johnnys-express.com

Contact Person: Joe Delmotte Business/Company: Stonefield Engineering & Design

Contact's Address: 555 S. Old Woodward Ave, Suite 12L City: Birmingham State: MI Zip Code: 48009

Contact's Phone # (248) 247-1115 Contact's Email jdelmotte@stonefieldeng.com

Please provide the following information:

1) **Site Plan** showing:
   - property dimensions, including road right-of-way & building setback lines
   - foot print of building(s), including dimensions & square footage
   - all easements, protective walls, sidewalks & existing trees
   - any significant topographic features (existing or proposed)
   - parking layout, including type of surface material, sizes of spaces & aisles
   - method used in calculating parking requirement
   - location of light standards servicing parking lot & cutout showing type & height
   - location of trash receptacle, including description of screening
   - location of signs (if proposed must submit separate sign application)
2) **Detailed Landscape Plan** including:
   - listing or labeling of all planted materials as to type and size
   - areas to be fully irrigated
   - percentage of landscaping provided (15% of total site required)
3) **Building Elevation Plan** depicting:
   - architectural quality
   - wall section & detail plan - exterior building materials must be labeled (i.e. brick, thin brick, E.F.I.S.)
   - all visible rooftop mechanical equipment and how they will be screened
4) **General Floor Plan** showing:
   - floor layout
   - entrances & exits
   - restaurants are required to illustrate seating arrangement & capacity
5) **One (1) set of reduced plans** (i.e. site, landscape, elevation, floor), **a maximum 11" x 17" in size, or digital file in a .pdf format either on CD or emailed to:** planning@livonia.gov
6) **Legal Description** of the property to be considered (Clearly Printed)
7) One (1) completed application form & **three (3)** sets of full-size drawings

RECEIVED
MAR 21 2025
CITY OF LIVONIA
PLANNING COMMISSION

You are invited and encouraged to review your proposal with the Planning Department staff. Only one set of preliminary drawings will be necessary for this analysis.

FEE COMPUTATION		
5,734	sq. ft. of new construction x $20.00 per 1,000 sq. ft.	$600.00
	(**NOTE**: Round off to nearest 1,000) +	$120.00
	Total Amount Due $	$720.00

Owner of Property: Middlebelt Plymouth Venture LLC

Owner's Address: 17800 Laurel Park Drive North, Suite 200C City: Livonia State: MI Zip Code: 48152

Owner's Phone # (248) 262-1000 Owner's Email johns@schostak.com

Signature of Owner: _____ Print Name: David Johns, VP of Constr., Schostak Bros & Co., Inc, As Agent for Owner

IN THE UNITED STATES DISTRICT COURT
EASTERN DISTRICT OF MICHIGAN

MIDDLEBELT PLYMOUTH VENTURE, LLC, a Michigan limited liability company,

Plaintiff,

v.

CITY OF LIVONIA, a Michigan municipal corporation,

Defendant.

Case No. 2:22-cv-12734
Hon. Jonathan J.C. Grey

Michael A. Cox (P43039)
Jason M. Schneider (P79296)
THE MIKE COX LAW FIRM, PLLC
Attorney for Plaintiff
17430 Laurel Park Dr. N., Ste. 120E
Livonia, MI 48152
(734) 591-4002
mc@mikecoxlaw.com
jschneider@mikecoxlaw.com

Paul A. Bernier, City atty. (P39119)
Michael E. Fisher (P37037)
Eric S. Goldstein (P45842)
Attorneys for Defendant
33000 Civic Center Drive
Livonia, MI 48154
(734) 446-2520
mfisher@livonia.gov

CONSENT JUDGMENT

This matter comes before the Court on motion and stipulation of the Parties, Plaintiff Middlebelt Plymouth Venture ("MPV") and Defendant City of Livonia ("City") (MPV and the City are sometimes referred to individually as a "Party" or collectively as the "Parties"). The Court, being advised in the premises, finds as follows:

1. MPV is the owner of certain land located at 29707 and 30273 Plymouth Rd., Livonia, Michigan 48150 (the "Properties"). The legal descriptions of the

Properties are attached as **Exhibit A**.

2. The City is a municipal corporation located in Wayne County, Michigan and is organized and existing under Act 279, Public Act 1909, as amended, MCL 117.1, et seq.

3. Pursuant to Act 207, Public Act 1921, as amended, the City has adopted certain zoning regulations applicable to all land located within the City ("Zoning Ordinance").

4. In August 2020, MPV submitted a Rezoning Petition, which went through several variations, all of which the City has labeled "Petition 2020-08-01-06" (also referred to at times in this document as the "Rezoning Petition").

5. In April 2022, MPV filed a Site Plan application as a separate petition, which the City labeled "Petition 2022-04-08-02" (also referred to as the "Site Plan Petition").

6. On September 26, 2022, after several public hearings, the City Council denied both the Rezoning and Site Plan Petitions.

7. MPV filed this lawsuit on November 10, 2022.

8. The Parties now desire to settle this lawsuit in accordance with the terms and conditions of this Consent Judgment and to resolve this dispute without any admission of liability.

NOW THEREFORE, this Consent Judgment being presented to the Court

pursuant to the stipulation of the Parties, and the Court having determined that this proposed Consent Judgment is reasonable and just, and being otherwise fully advised in the premises, the Court ORDERS the following:

Section 1
Development

1.1 Wonderland Flats. The subject properties are zoned C2 and shall remain C2 but can be developed by MPV or its successors, assigns, and transferees as a Planned Residential Development under Section 5.02 of the Livonia Zoning Ordinance, provided such development is consistent with **Exhibit B** (the "Wonderland Flats Project" which includes but is not limited to architectural renderings, descriptions, Site Plan and Landscaping Plan.).

1.2 Car Wash. MPV or its successors, assigns, and transferees, may develop and construct a car wash business at 30207 Plymouth Road, Livonia, MI 48150, Tax Parcel ID # 46-137-99-0004-001, and adjacent portions of the Northeast section of 30273 Plymouth Road, Livonia, MI 48150, Tax Parcel ID # 46-13-99-0004-002 ("Car Wash Project"). The subject properties are zoned C2 and shall remain C2 but can be developed as provided for in this Consent Judgment. Final plans shall be submitted to the Director of the City Planning Department, Mark Taormina or his successor, for final approval and final approval shall not be unreasonably withheld.

1.3 Special Use and Use Variance Waiver. In granting MPV and its

successors, assigns, and transferees the right to develop and construct the Wonderland Flats Project and Car Wash Project, the City waives any requirement for MPV and its successors, assigns, and transferees to obtain special waiver uses, and/or use variances.

1.4 Lot Splits. If MPV or its successors, assigns, and transferees determine that a lot split is necessary to complete either the Wonderland Flats Project or the Car Wash Project, the City shall approve such lot split upon application by MPV or its successors, assigns, and transferees.

1.5 City Council Approval. In accordance with the terms of this Consent Judgment, the City Council shall approve (1) the Wonderland Flats Project described in Section 1.1 of this Consent Judgment and (2) the Car Wash Project described in Section 1.2 of this Consent Judgment at a duly held regular City Council meeting. These approvals shall constitute a finding that MPV and its successors, assigns, or transferees may proceed with development and construction of both projects as described herein.

1.6 Permit Applications. After entry of this Consent Judgment, MPV or its successors, assigns, or transferees may submit any permit applications required under the Zoning Ordinance and any other applicable laws in connection with construction of the Wonderland Flats Project and Car Wash Project. Notwithstanding any provisions in the City's Zoning Ordinance, MPV or its

successors, assigns, or transferees may apply for any necessary permits up to three years after execution of this Consent Judgment.

1.7 Issuance of Permits. The City shall approve and issue on a timely basis and without unreasonable delay all necessary permits for which MPV or its successors, assigns, or transferees has applied. The permit applicant shall pay all necessary fees and otherwise comply with the City's bonding requirements, ordinances, and applicable building codes. Upon issuance and notwithstanding any provisions in the City's Zoning Ordinance, the granted permits shall be valid for a period of three years from the date of issuance.

1.8 Non-City Permit and Other Assistance. At the request of MPV or its successors, assigns, and transferees, the City shall cooperate with MPV or its successors, assigns, and transferees with obtaining any necessary licenses or permits from state, federal, or other regulatory bodies, as well as any necessary easements or other land-use rights from third parties.

1.9 Permit-Related Site Plan Variations. If some reasonable modifications to **Exhibit B** become necessary or desirable as a result of any engineering, regulatory, market, or other analysis, approval by the City shall not be unreasonably withheld as long as the changes are substantially consistent with **Exhibit B**.

1.10 Ordinance Compliance. The construction and development of the Wonderland Flats Project and Car Wash Project shall be deemed to comply with all

zoning ordinances and other zoning regulations of the City, provided said construction and development is compliant with this Consent Judgment and its Exhibits.

Section 2
Release

2.1 Release. As consideration for the promises and conditions of this Consent Judgement, each Party, for itself and its respective successors and assigns, releases and forever discharges the other Party, including its employees, officials, councils, boards, officers, consultants, independent contractors, and attorneys of record from any and all claims, demands, actions, causes of action, sums, debts, judgments, executions, damages, and rights of whatever nature and law, equity or otherwise, known or unknown, which now exist or which may subsequently accrue by reason of any acts, events, or facts existing on the day of this Consent Judgement and related to the allegations and claims in MPV's Complaint. This release shall not bar claims brought to enforce the provisions of this Consent Judgment.

2.2 Continuing Jurisdiction. The Court retains jurisdiction to assure compliance with the terms of this Consent Judgment.

2.3 Enforcement Proceedings. In a proceeding to enforce this Consent Judgment, either Party may seek to recover costs and attorney fees incurred in seeking such enforcement, in addition to any other applicable and available relief.

Section 3
Additional Provisions

3.1 Good Faith. The Parties and their respective successors and assigns shall treat and cooperate with one another in good faith and shall neither take any action which is contrary to or interferes with the provisions of this Consent Judgment.

3.2 Recording. This Consent Judgment is declared to be in recordable form, and the covenants contained in this Consent Judgment are declared to be covenants running with the land and all its portions or divisions, and the Wayne County Register of Deeds is ordered to record a true copy of this Consent Judgment in the land records of Wayne County.

3.3 Amendment. The terms of this Consent Judgment may only be amended, changed, or modified by written agreement of the Parties and as approved and ordered by this Court.

3.4 Conflicts with Ordinances. To the extent that this Consent Judgment conflicts with any City Ordinance requirements, including with respect to MPV's deemed compliance with all City zoning ordinances and other regulations, the terms of this Consent Judgment shall control. To the extent this Consent Judgment is silent on issues regulated by City Ordinances, Codes and Regulations, then the City Ordinances, Codes and Regulations shall control, provided that the application of any such Ordinances, Codes and Regulations to this development shall not prevent

or impede the construction or furtherance of the development.

3.5 Authority. By their execution of this Consent Judgment, the Parties warrant that they have the authority to execute this Consent Judgment and bind their respective entities, successors, and assigns to its terms and conditions.

3.6 Judgment and Exhibits. This Consent Judgment includes all of its exhibits, and the exhibits are incorporated into and made a part of the Consent Judgment as fully and to the same extent as if the contents of the exhibits and the Site Plans were set out in their entirety in the body of this Consent Judgment.

3.7 Entire Agreement. This Consent Judgment contains the entire agreement between the Parties. Each Party affirms that it has not relied on any representations or statements made by the other Party with respect to the subject matter of this Consent Judgment.

3.8 Multiple Counterparts. This Consent Judgment may be executed in one or more counterparts, all of which together shall constitute one agreement.

IT IS SO ORDERED.

Dated: December 20, 2023

s/ Jonathan J.C. Grey
Hon. Jonathan J.C. Grey
United States District Judge

STIPULATED AND AGREED BY:

/s/ Michael A. Cox
Michael A. Cox (P43039)
Jason M. Schneider (P79296)
THE MIKE COX LAW FIRM, PLLC
Attorney for Plaintiff
17430 Laurel Park Dr. N., Ste. 120E
Livonia, MI 48152
734.591.4002
mc@mikecoxlaw.com
jschneider@mikecoxlaw.com

Date: December 13, 2023

/s/ Paul A. Bernier (w/ permission)
Paul A. Bernier, City Atty. (P39119)
Michael E. Fisher (P37037)
Eric S. Goldstein (P45842)
Attorneys for Defendant
33000 Civic Center Drive
Livonia, MI 48154
(734) 446-2520
mfisher@livonia.gov

Date: December 13, 2023

EXHIBIT A

PROPERTY DESCRIPTION

Part of the Northeast ¼ of Section 35, Township 1 South, Range 9 East, City of Livonia, Wayne County, Michigan, described as: Commencing at the Northeast Corner of said Section 35: thence North 89 degrees 49 minutes 46 seconds West 1439.16 feet along the north line of said Section and centerline of Plymouth Road (120 feet wide): thence South 00 degrees 10 minutes 14 seconds West 60.00 feet to the South line of Plymouth Road; thence continuing South 00 degrees 10 minutes 14 seconds West 411.54 feet: thence North 89 degrees 57 minutes 47 seconds West 34.00 feet to the POINT OF BEGINNING: thence South 00 degrees 19 minutes 25 seconds West 779.21 feet: thence North 89 degrees 44 minutes 39 seconds West 713.60 feet: thence North 00 degrees 10 minutes 14 seconds East 284.57 feet: thence South 89 degrees 49 minutes 46 seconds East 148.20 feet: thence North 00 degrees 10 minutes 14 seconds East 158.97 feet: thence South 89 degrees 49 minutes 46 seconds East 30.48 feet: thence North 00 degrees 10 minutes 14 seconds East 335.09 feet: thence South 89 degrees 46 minutes 36 seconds East 537.00 feet to the POINT OF BEGINNING. Containing 473,257.9 SF and/or 10.86 acres

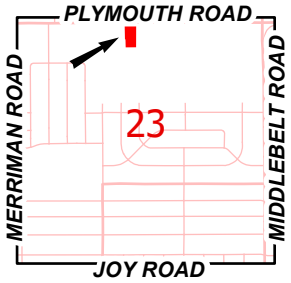

Aerial Map

Petition 2025-03-08-03
Johnny's Car Wash
30207 Plymouth Road

N

Not to Scale

City of Livonia
Planning Department

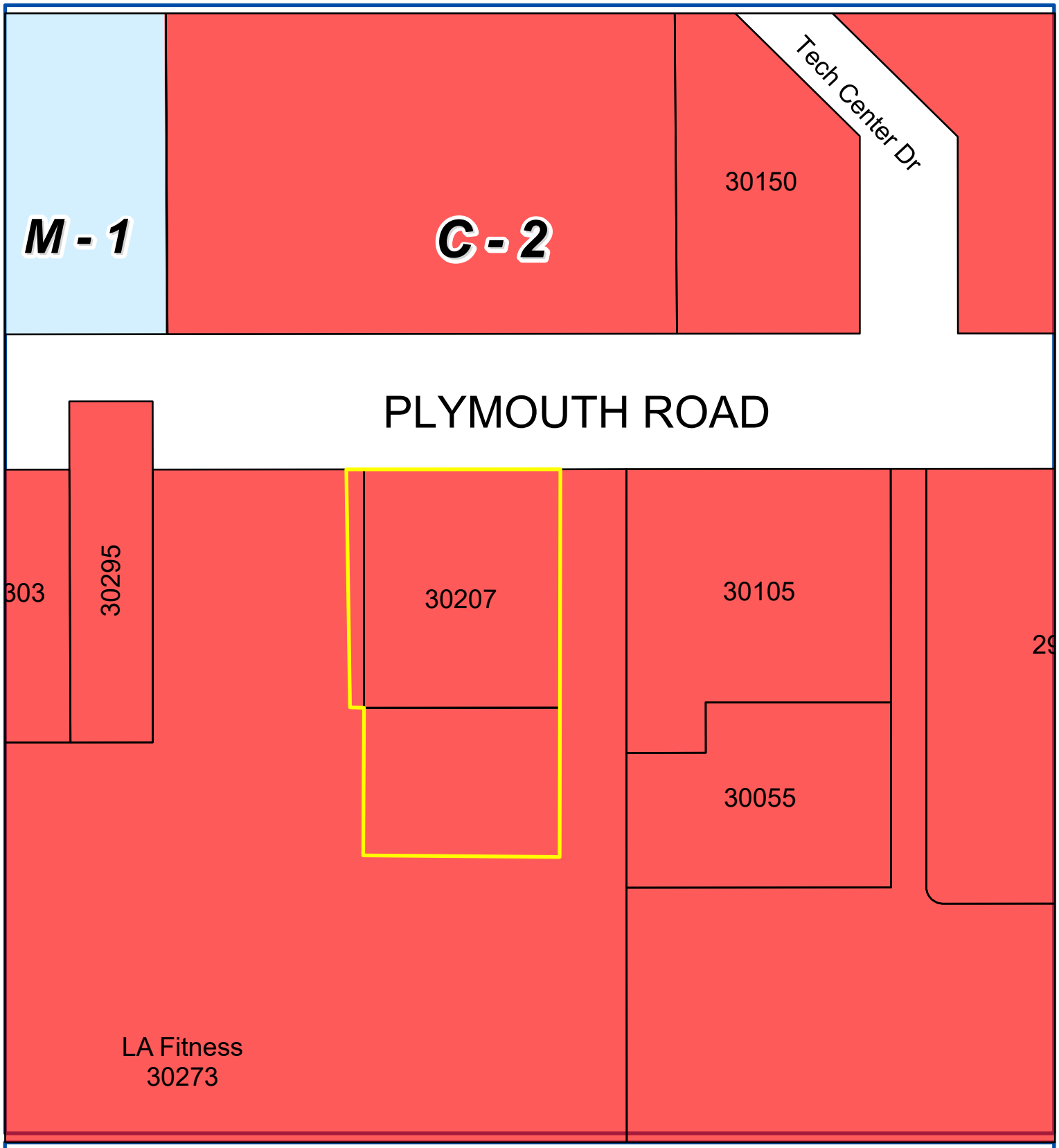

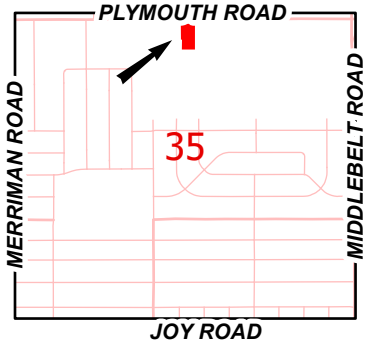

Address & Zoning Map

Petition 2025-03-08-03
Johnny's Car Wash
30207 Plymouth Road

N

Not to Scale

City of Livonia
Planning Department

SITE DEVELOPMENT PLANS

FOR

JOHNNY'S EXPRESS CAR WASH

PROPOSED AUTO WASH

PARCEL ID: 137-99-0004-001 & PART OF 137-99-0004-002
30207 PLYMOUTH ROAD
CITY OF LIVONIA, WAYNE COUNTY, MICHIGAN

APPLICANT

DBA MINUTE MAN CAR WASH
JONATHAN TIWAINI
248.910.1850

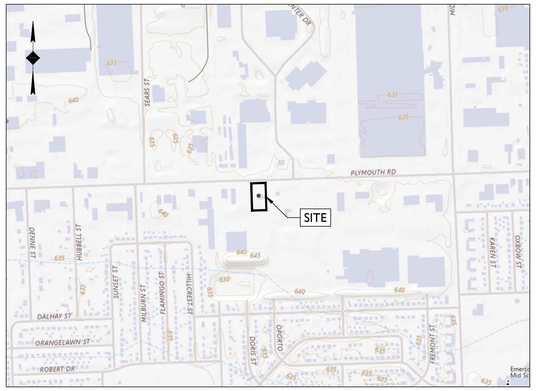

SOURCE: USGS TOPOGRAPHICAL MAPPER, DATE RETRIEVED 2/14/2025

LOCATION MAP

SCALE: 1" = 800'±

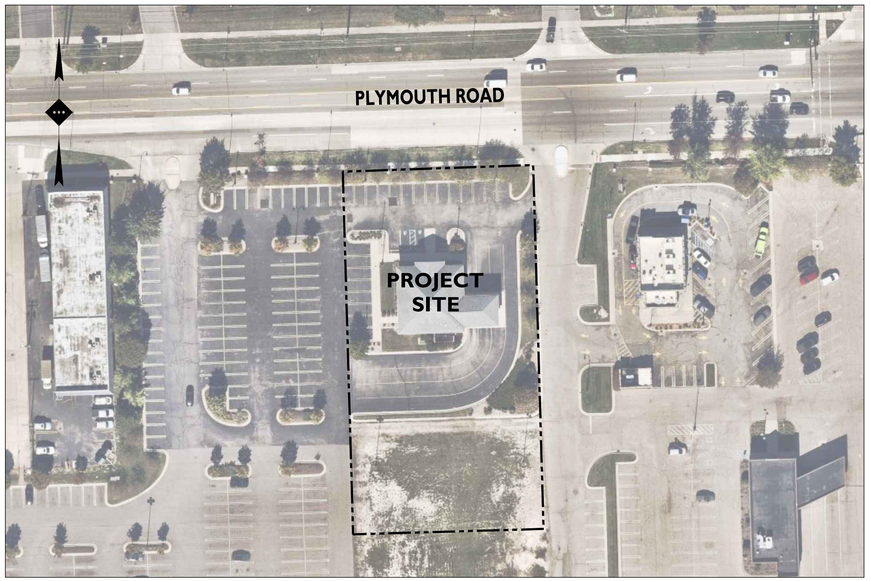

SOURCE: NEARMAP, DATE RETRIEVED 2/14/2025

AERIAL MAP

SCALE: 1" = 60'±

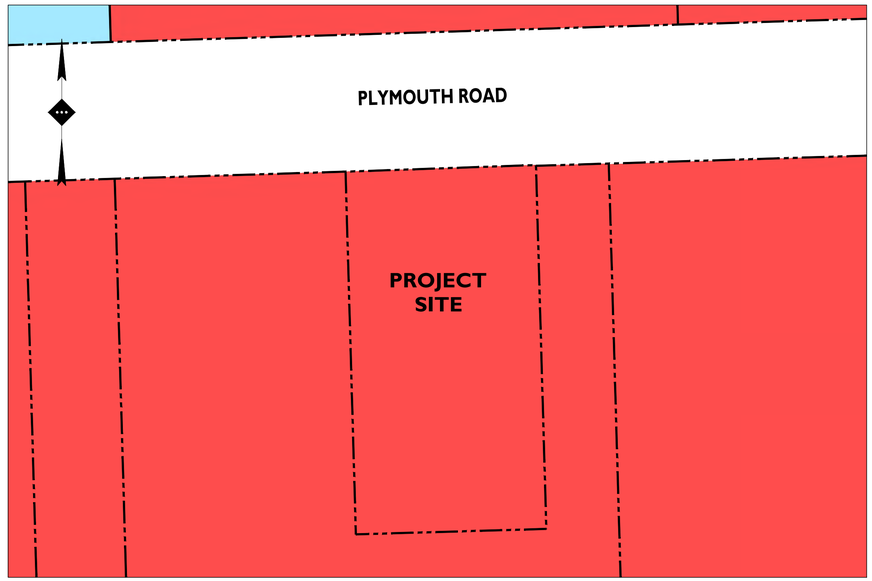

SOURCE: CITY OF LIVONIA ZONING MAP

GENERAL BUSINESS DISTRICT (C-2)

LIGHT MANUFACTURING DISTRICT (M-1)

ZONING MAP

SCALE: 1" = 60'±

PLANS PREPARED BY:

STONEFIELD engineering & design

Birmingham, MI · New York, NY · Salem, MA
Princeton, NJ · Tampa, FL · Rutherford, NJ
www.stonefieldeng.com

555 S. Old Woodward Avenue, Suite 12L, Birmingham, MI 48009
Phone 248.247.1115

811 Know what's **below** **Call** before you dig.

PLAN REFERENCE MATERIALS:

1. THIS PLAN SET REFERENCES THE FOLLOWING DOCUMENTS INCLUDING, BUT NOT LIMITED TO:
   - ALTA / NSPS LAND TITLE SURVEY PREPARED BY STONEFIELD ENGINEERING & DESIGN, DATED 01/10/2025
   - ARCHITECTURAL PLANS PREPARED BY MOTOR CITY WASH WORKS, DATED 01/27/2025
   - AERIAL MAP OBTAINED FROM NEARMAP, DATE RETRIEVED 02/14/2025
   - LOCATION MAP OBTAINED FROM USGS TOPOGRAPHICAL MAPPER, DATE RETRIEVED 02/14/2025
2. ALL REFERENCE MATERIAL LISTED ABOVE SHALL BE CONSIDERED A PART OF THIS PLAN SET AND ALL INFORMATION CONTAINED WITHIN THESE MATERIALS SHALL BE UTILIZED IN CONJUNCTION WITH THIS PLAN SET. THE CONTRACTOR IS RESPONSIBLE TO OBTAIN A COPY OF EACH REFERENCE AND REVIEW IT THOROUGHLY PRIOR TO THE START OF CONSTRUCTION.

SHEET INDEX

DRAWING TITLE	SHEET #
COVER SHEET	C-1
DEMOLITION PLAN	C-2
SITE PLAN	C-3
OVERALL SITE PLAN	C-4
GRADING & STORMWATER MANAGEMENT PLAN	C-5
UTILITY PLAN	C-6
LIGHTING PLAN	C-7
LANDSCAPING PLAN	C-8
LANDSCAPING DETAILS	C-9
CONSTRUCTION DETAILS	C-10 - C-12

ADDITIONAL SHEETS

DRAWING TITLE	SHEET #
ALTA / NSPS LAND TITLE SURVEY	1 OF 1

ISSUE	DATE	BY	DESCRIPTION
3	04/16/2025	JD/KG	RESUBMISSION FOR SITE PLAN APPROVAL
2	04/09/2025	JD/KG	UPDATE FOR DTE COORDINATION
1	03/14/2025	JD/KG	FOR SITE PLAN APPROVAL

NOT APPROVED FOR CONSTRUCTION

STONEFIELD engineering & design
Birmingham, MI · New York, NY · Salem, MA
Princeton, NJ · Tampa, FL · Rutherford, NJ
www.stonefieldeng.com
555 S. Old Woodward Avenue, Suite 12L, Birmingham, MI 48009
Phone 248.247.1115

SITE DEVELOPMENT PLANS
JOHNNY'S EXPRESS CAR WASH
PROPOSED AUTO WASH
PARCEL ID: 137-99-0004-001 & PART OF 137-99-0004-002
30207 PLYMOUTH ROAD
CITY OF LIVONIA
WAYNE COUNTY, MICHIGAN

STATE OF MICHIGAN
JONATHAN REID COOKSEY
ENGINEER
LICENSE NO. 47001028
LICENSED PROFESSIONAL ENGINEER

STONEFIELD engineering & design

SCALE: AS SHOWN | PROJECT ID: DET-240419

TITLE: COVER SHEET

DRAWING: C-1

V:\DET\DET240419 PALLAR CONSTRUCTION - 30207 N PLYMOUTH ROAD, LIVONIA, MI\CADD\PLOTTER\PR-01-COVER.DWG

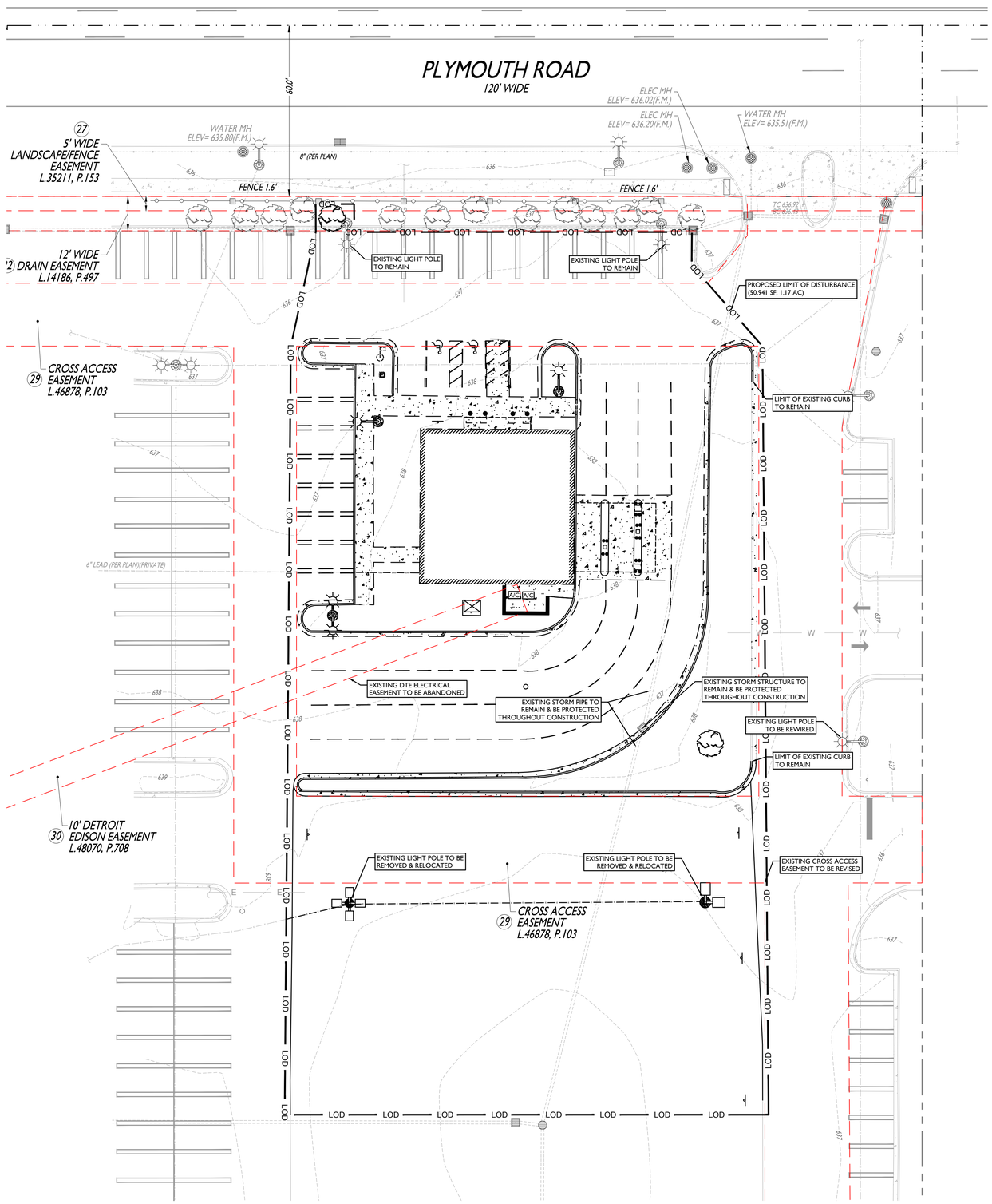

SYMBOL	DESCRIPTION
— — — — —	FEATURE TO BE REMOVED / DEMOLISHED
——— LOD ———	LIMIT OF DISTURBANCE

ALL SITE FEATURES WITHIN THE LIMIT OF DISTURBANCE INDICATED ON THIS PLAN ARE TO BE REMOVED / DEMOLISHED UNLESS OTHERWISE NOTED. THE CONTRACTOR SHALL NOTIFY STONEFIELD ENGINEERING & DESIGN, LLC. IF SIGNIFICANT DISCREPANCIES ARE DISCERNED BETWEEN THIS PLAN AND FIELD CONDITIONS

811 Know what's **below** **Call** before you dig.

DEMOLITION NOTES

1. THE WORK REFLECTED ON THE DEMOLITION PLAN IS TO PROVIDE GENERAL INFORMATION TOWARDS THE EXISTING ITEMS TO BE DEMOLISHED AND/OR REMOVED. THE CONTRACTOR IS RESPONSIBLE TO REVIEW THE ENTIRE PLAN SET AND ASSOCIATED REPORTS/REFERENCE DOCUMENTS INCLUDING ALL DEMOLITION ACTIVITIES AND INCIDENTAL TASKS NECESSARY TO COMPLETE THE SITE IMPROVEMENTS.
2. THE CONTRACTOR IS RESPONSIBLE TO DETERMINE THE MEANS AND METHODS OF DEMOLITION ACTIVITIES.
3. EXPLOSIVES SHALL NOT BE USED UNLESS WRITTEN CONSENT FROM BOTH THE OWNER AND ANY APPLICABLE GOVERNING AGENCY IS OBTAINED. BEFORE THE START OF ANY EXPLOSIVE PROGRAM, THE CONTRACTOR IS RESPONSIBLE TO OBTAIN ALL LOCAL, STATE, AND FEDERAL PERMITS. ADDITIONALLY, THE CONTRACTOR WILL BE RESPONSIBLE FOR ALL SEISMIC TESTING AS REQUIRED AND ANY DAMAGES AS THE RESULT OF SAID DEMOLITION PRACTICES.
4. ALL DEMOLITION ACTIVITIES SHALL BE PERFORMED IN ACCORDANCE WITH LOCAL, STATE, AND FEDERAL CODES. THE CONTRACTOR IS RESPONSIBLE FOR ENSURING ALL UTILITIES ARE DISCONNECTED IN ACCORDANCE WITH THE UTILITY AUTHORITY'S REQUIREMENTS PRIOR TO STARTING THE DEMOLITION OF ANY STRUCTURE. ALL EXCAVATIONS ASSOCIATED WITH DEMOLISHED STRUCTURES OR REMOVED TANKS SHALL BE BACKFILLED WITH SUITABLE MATERIAL AND COMPACTED TO SUPPORT SITE AND BUILDING IMPROVEMENTS. A GEOTECHNICAL ENGINEER SHOULD BE PRESENT DURING BACKFILLING ACTIVITIES TO OBSERVE AND CERTIFY THAT BACKFILL MATERIAL WAS COMPACTED TO A SUITABLE CONDITION.
5. DEMOLISHED DEBRIS SHALL NOT BE BURIED ON SITE. ALL WASTE/DEBRIS GENERATED FROM DEMOLITION ACTIVITIES SHALL BE DISPOSED OF IN ACCORDANCE WITH ALL LOCAL, STATE AND FEDERAL REQUIREMENTS. THE CONTRACTOR IS RESPONSIBLE TO MAINTAIN ALL RECORDS OF THE DISPOSAL TO DEMONSTRATE COMPLIANCE WITH THE ABOVE REGULATIONS.

20' 0' 20' 40'
GRAPHIC SCALE IN FEET
1" = 20'

ISSUE	DATE	BY	DESCRIPTION
3	04/16/2025	JD/KG	RESUBMISSION FOR SITE PLAN APPROVAL
2	04/09/2025	JD/KG	UPDATE FOR DTE COORDINATION
1	03/14/2025	JD/KG	FOR SITE PLAN APPROVAL

NOT APPROVED FOR CONSTRUCTION

STONEFIELD engineering & design
Birmingham, MI · New York, NY · Salem, MA
Princeton, NJ · Tampa, FL · Rutherford, NJ
www.stonefieldeng.com
555 S. Old Woodward Avenue, Suite 12L, Birmingham, MI 48009
Phone 248.247.1115

SITE DEVELOPMENT PLANS

JOHNNY'S EXPRESS CAR WASH

PROPOSED AUTO WASH

PARCEL ID: 137-99-0004-001 & PART OF 137-99-0004-002
30207 PLYMOUTH ROAD
CITY OF LIVONIA
WAYNE COUNTY, MICHIGAN

STATE OF MICHIGAN JONATHAN REID GOOKSEY ENGINEER NO. 6201058918 LICENSED PROFESSIONAL ENGINEER

STONEFIELD engineering & design

SCALE: 1" = 20' | PROJECT ID: DET-240419

TITLE:

DEMOLITION PLAN

DRAWING:

C-2

V:\DET\240419\DET-240419 PALLAR CONSTRUCTION - 30207 PLYMOUTH ROAD, LIVONIA, MI\CADD\PLOT\DSP-(1) DEMOLISHING

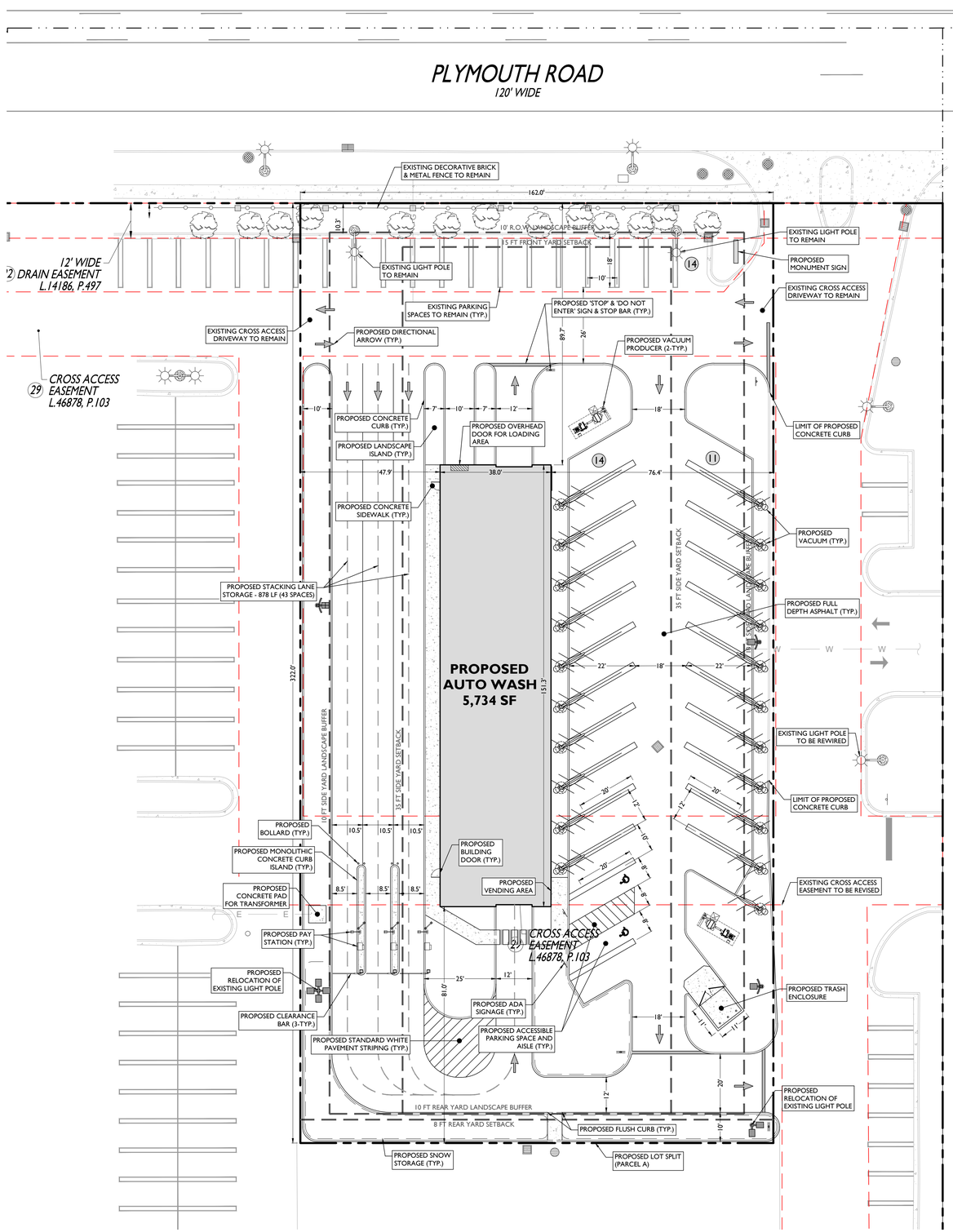

LAND USE AND ZONING

PARCEL ID: 137-99-0004-000

GENERAL BUSINESS (C-2)

PROPOSED USE

AUTO-WASH — WAIVER USE

ZONING REQUIREMENT	REQUIRED	PROPOSED
MINIMUM AUTO WASH LOT AREA	8,000 SF	52,185 SF (1.198 AC)
MINIMUM AUTO WASH LOT WIDTH	100 FT	162.0 FT
MINIMUM BUILDING SIZE	400 SF	5,734 SF
MAXIMUM BUILDING HEIGHT	35 FT (2 STORIES)	26 FT
MINIMUM FRONT YARD SETBACK	15 FT	89.7 FT
MINIMUM SIDE YARD SETBACK (ONE)(1)	35 FT(1)	47.9 FT
MINIMUM SIDE YARD SETBACK (BOTH)	70 FT	124.3 FT
MINIMUM REAR YARD SETBACK	8 FT	81.0 FT
MINIMUM R.O.W. LANDSCAPE BUFFER	10 FT	10.4 FT
TOTAL PAVED PARKING AREA	N/A	30,705 SF
MINIMUM INTERIOR LANDSCAPING(2)	5% (1,535 SF)	PROVIDED
MINIMUM SNOW STORAGE AREA(2)	10% (3,071 SF)	PROVIDED

(1) § 6.07.(3) - AUTO-WASH CAN BE NO CLOSER THAN 35 FT FROM ONE SIDE PROPERTY LINE

(2) § 9.03.(7) - AREA EQUIVALENT TO 10% OF PAVED PARKING AREA

(3) § 10.03.B(l) - AREA EQUIVALENT TO 5% OF PAVED PARKING AREA

OFF-STREET PARKING REQUIREMENTS

CODE SECTION	REQUIRED	PROPOSED
§ 9.05	AUTO-WASH PARKING:	17 REG. SPACES
	AT LEAST 20 SPACES	21 VAC. SPACES
		TOTAL: 39 SPACES
§ 9.03.(5)	MAXIMUM PARKING:	39 SPACES (W)
	(1.2)(20 SPACES) = 24 SPACES	
§ 9.04.(1)	PARKING DIMENSIONS (90°):	10 FT X 18 FT
	10 FT X 20 FT W/ 24 FT AISLE(1)	W/ 24 FT AISLE (EN)
§ 9.04.(1)	PARKING DIMENSIONS (60°):	10 FT X 20 FT
	10 FT X 20 FT W/ 18 FT AISLE(1)	W/ 18 FT AISLE
	STACKING REQUIREMENTS:	43 SPACES
	N/A	
§ 9.08	LOADING:	TO OCCUR
	1 SPACE: 10 FT X 50 FT	OFF HOURS

(W) WAIVER

(EN) EXISTING NON-CONFORMITY

(1) § 9.03.(13) - PARKING SPACES SHALL BE STRIPED WITH 4" WIDE DOUBLE LINES, 24" APART

PARCEL DESCRIPTON - PARCEL 137-99-004-001 (FROM CITY OF LIVONIA TAX RECORDS)

PART OF THE NORTH 1/2 OF THE NORTHEAST 1/4 OF SECTION 35, TOWN 1 SOUTH, RANGE 9 EAST, DESCRIBED AS: COMMENCING AT THE NORTHEAST CORNER OF SECTION 35; THENCE NORTH 89 DEGREES 49 MINUTES 46 SECONDS WEST 2010.15 FEET; THENCE SOUTH 00 DEGREES 10 MINUTES 14 SECONDS WEST 60.00 FEET; THENCE NORTH 89 DEGREES 49 MINUTES 46 SECONDS WEST 58.01 FEET TO THE POINT OF BEGINNING; THENCE SOUTH 00 DEGREES 10 MINUTES 14 SECONDS WEST 210.00 FEET; THENCE NORTH 89 DEGREES 49 MINUTES 46 SECONDS WEST 173.00 FEET; THENCE NORTH 00 DEGREES 10 MINUTES 14 SECONDS EAST 210.00 FEET; THENCE SOUTH 89 DEGREES 49 MINUTES 46 SECONDS EAST 173.00 FEET TO THE POINT OF BEGINNING. CONTAINING 0.834 ACRES, MORE OR LESS.

PARCEL DESCRIPTON - PARCEL 137-99-004-002 (FROM CITY OF LIVONIA TAX RECORDS)

PART OF THE NORTH 1/2 OF THE NORTHEAST 1/4 OF SECTION 35, TOWN 1 SOUTH, RANGE 9 EAST, DESCRIBED AS: COMMENCING AT THE NORTHEAST CORNER OF SECTION 35; THENCE NORTH 89 DEGREES 49 MINUTES 46 SECONDS WEST 2010.15 FEET; THENCE SOUTH 00 DEGREES 10 MINUTES 14 SECONDS WEST 60.00 FEET TO THE POINT OF BEGINNING; THENCE SOUTH 00 DEGREES 10 MINUTES 14 SECONDS WEST 1051.84 FEET; THENCE NORTH 89 DEGREES 51 MINUTES 00 SECONDS WEST 30.00 FEET; THENCE NORTH 11 DEGREES 24 MINUTES 45 SECONDS WEST 149.72 FEET; THENCE NORTH 89 DEGREES 49 MINUTES 46 SECONDS WEST 537.75 FEET; THENCE NORTH 00 DEGREES 14 MINUTES 03 SECONDS EAST 665.00 FEET; THENCE SOUTH 89 DEGREES 49 MINUTES 46 SECONDS EAST180.00 FEET; THENCE NORTH 00 DEGREES 14 MINUTES 03 SECONDS EAST 240.18 FEET; THENCE SOUTH 89 DEGREES 49 MINUTES 46 SECONDS EAST 185.80 FEET; THENCE SOUTH 00 DEGREES 10 MINUTES 14 SECONDS WEST 210.00 FEET; SOUTH 89 DEGREES 49 MINUTES 46 SECONDS EAST 173.00 FEET; THENCE NORTH 00 DEGREES 10 MINUTES 14 SECONDS EAST 210.00 FEET; THENCE SOUTH 89 DEGREES 49 MINUTES 46 SECONDS EAST 58.01 FEET TO THE POINT OF BEGINNING. CONTAINING 10.737 ACRES, MORE OR LESS.

PARCEL A DESCRIPTON (REVISED PARCEL 137-99-004-001 DESCRIPTION)

PART OF THE NORTH 1/2 OF THE NORTHEAST 1/4 OF SECTION 35, TOWN 1 SOUTH, RANGE 9 EAST, DESCRIBED AS: COMMENCING AT THE NORTHEAST CORNER OF SAID SECTION 35; THENCE NORTH 89 DEGREES 49 MINUTES 46 SECONDS WEST 2010.15 FEET ALONG THE NORTH LINE OF SAID SECTION 35; THENCE SOUTH 00 DEGREES 10 MINUTES 14 SECONDS WEST 60.00 FEET TO THE SOUTHERLY RIGHT-OF-WAY LINE OF PLYMOUTH ROAD (M-14) (VARIABLE WIDTH); THENCE NORTH 89 DEGREES 49 MINUTES 46 SECONDS WEST 58.01 FEET ALONG THE SOUTHERLY RIGHT-OF-WAY LINE OF PLYMOUTH ROAD TO THE POINT OF BEGINNING; THENCE SOUTH 00 DEGREES 10 MINUTES 14 SECONDS WEST 322.00 FEET; THENCE NORTH 89 DEGREES 49 MINUTES 46 SECONDS WEST 162.00 FEET; THENCE NORTH 00 DEGREES 10 MINUTES 14 SECONDS EAST 322.00 FEET TO THE SOUTHERLY RIGHT-OF-WAY LINE OF PLYMOUTH ROAD; THENCE SOUTH 89 DEGREES 49 MINUTES 46 SECONDS EAST 162.00 FEET ALONG THE SOUTHERLY RIGHT-OF-WAY LINE OF PLYMOUTH ROAD TO THE POINT OF BEGINNING, CONTAINING 1.198 ACRES, MORE OR LESS, BEING SUBJECT TO ANY EASEMENTS AND/OR EXCEPTIONS, RECORDED OR OTHERWISE, IF ANY.

PARCEL B DESCRIPTON (REVISED PARCEL 137-99-004-002 DESCRIPTION)

PART OF THE NORTH 1/2 OF THE NORTHEAST 1/4 OF SECTION 35, TOWN 1 SOUTH, RANGE 9 EAST, DESCRIBED AS: COMMENCING AT THE NORTHEAST CORNER OF SECTION 35; THENCE NORTH 89 DEGREES 49 MINUTES 46 SECONDS WEST 2010.15 FEET ALONG THE NORTH LINE OF SAID SECTION 35; THENCE SOUTH 00 DEGREES 10 MINUTES 14 SECONDS WEST 60.00 FEET TO THE SOUTHERLY RIGHT-OF-WAY LINE OF PLYMOUTH ROAD (M-14) (VARIABLE WIDTH) AND TO THE POINT OF BEGINNING; THENCE CONTINUING SOUTH 00 DEGREES 10 MINUTES 14 SECONDS WEST 1051.84 FEET; THENCE NORTH 89 DEGREES 51 MINUTES 00 SECONDS WEST 30.00 FEET; THENCE NORTH 11 DEGREES 24 MINUTES 45 SECONDS WEST 149.72 FEET; THENCE NORTH 89 DEGREES 49 MINUTES 46 SECONDS WEST 537.75 FEET; THENCE NORTH 00 DEGREES 14 MINUTES 03 SECONDS EAST 665.00 FEET; THENCE SOUTH 89 DEGREES 49 MINUTES 46 SECONDS EAST180.00 FEET; THENCE NORTH 00 DEGREES 14 MINUTES 03 SECONDS EAST 240.18 FEET TO THE SOUTHERLY RIGHT-OF-OF WAY LINE OF PLYMOUTH ROAD; THENCE SOUTH 89 DEGREES 49 MINUTES 46 SECONDS EAST 196.80 FEET ALONG THE SOUTHERLY RIGHT-OF-WAY LINE OF PLYMOUTH ROAD; THENCE SOUTH 00 DEGREES 10 MINUTES 14 SECONDS WEST 322.00 FEET; SOUTH 89 DEGREES 49 MINUTES 46 SECONDS EAST 162.00 FEET; THENCE NORTH 00 DEGREES 10 MINUTES 14 SECONDS EAST 322.00 FEET TO THE SOUTHERLY RIGHT-OF-WAY LINE OF PLYMOUTH ROAD; THENCE SOUTH 89 DEGREES 49 MINUTES 46 SECONDS EAST 58.01 FEET ALONG THE SOUTHERLY RIGHT-OF-WAY LINE OF PLYMOUTH ROAD TO THE POINT OF BEGINNING, CONTAINING 10.374 ACRES, MORE OR LESS, BEING SUBJECT TO ANY EASEMENTS AND/OR EXCEPTIONS, RECORDED OR OTHERWISE, IF ANY.

SYMBOL	DESCRIPTION
	PROPERTY LINE
	SETBACK LINE
	EXISTING EASEMENT
	PROPOSED CURB
	PROPOSED FLUSH CURB
	PROPOSED SIGNS / BOLLARDS
	PROPOSED BUILDING
	PROPOSED CONCRETE
	PROPOSED BUILDING DOORS

GENERAL NOTES

1. THE CONTRACTOR SHALL VERIFY AND FAMILIARIZE THEMSELVES WITH THE EXISTING SITE CONDITIONS AND THE PROPOSED SCOPE OF WORK (INCLUDING DIMENSIONS, LAYOUT, ETC.) PRIOR TO INITIATING THE IMPROVEMENTS IDENTIFIED WITHIN THESE DOCUMENTS. SHOULD ANY DISCREPANCY BE FOUND BETWEEN THE EXISTING SITE CONDITIONS AND THE PROPOSED WORK THE CONTRACTOR SHALL NOTIFY STONEFIELD ENGINEERING & DESIGN, LLC. PRIOR TO THE START OF CONSTRUCTION.
2. THE CONTRACTOR SHALL OBTAIN ALL NECESSARY PERMITS AND ENSURE THAT ALL REQUIRED APPROVALS HAVE BEEN OBTAINED PRIOR TO THE START OF CONSTRUCTION. COPIES OF ALL REQUIRED PERMITS AND APPROVALS SHALL BE KEPT ON SITE AT ALL TIMES DURING CONSTRUCTION.
3. ALL CONTRACTORS WILL TO THE FULLEST EXTENT PERMITTED BY LAW, INDEMNIFY AND HOLD HARMLESS STONEFIELD ENGINEERING & DESIGN, LLC. AND IT'S SUB-CONSULTANTS FROM AND AGAINST ANY DAMAGES AND LIABILITIES INCLUDING ATTORNEY'S FEES ARISING OUT OF CLAIMS BY EMPLOYEES OF THE CONTRACTOR IN ADDITION TO CLAIMS CONNECTED TO THE PROJECT AS A RESULT OF NOT CARRYING THE PROPER INSURANCE FOR WORKERS COMPENSATION, LIABILITY INSURANCE, AND LIMITS OF COMMERCIAL GENERAL LIABILITY INSURANCE.
4. THE CONTRACTOR SHALL NOT DEVIATE FROM THE PROPOSED IMPROVEMENTS IDENTIFIED WITHIN THIS PLAN SET UNLESS APPROVAL IS PROVIDED IN WRITING BY STONEFIELD ENGINEERING & DESIGN, LLC.
5. THE CONTRACTOR IS RESPONSIBLE TO DETERMINE THE MEANS AND METHODS OF CONSTRUCTION.
6. THE CONTRACTOR SHALL NOT PERFORM ANY WORK OR CAUSE DISTURBANCE ON A PRIVATE PROPERTY NOT CONTROLLED BY THE PERSON OR ENTITY WHO HAS AUTHORIZED THE WORK WITHOUT PRIOR WRITTEN CONSENT FROM THE OWNER OF THE PRIVATE PROPERTY.
7. THE CONTRACTOR IS RESPONSIBLE TO RESTORE ANY DAMAGED OR UNDERMINED STRUCTURE OR SITE FEATURE THAT IS IDENTIFIED TO REMAIN ON THE PLAN SET. ALL REPAIRS SHALL USE NEW MATERIALS TO RESTORE THE FEATURE TO ITS EXISTING CONDITION AT THE CONTRACTORS EXPENSE.
8. CONTRACTOR IS RESPONSIBLE TO PROVIDE THE APPROPRIATE SHOP DRAWINGS, PRODUCT DATA, AND OTHER REQUIRED SUBMITTALS FOR REVIEW. STONEFIELD ENGINEERING & DESIGN, LLC. WILL REVIEW THE SUBMITTALS IN ACCORDANCE WITH THE DESIGN INTENT AS REFLECTED WITHIN THE PLAN SET.
9. THE CONTRACTOR IS RESPONSIBLE FOR TRAFFIC CONTROL IN ACCORDANCE WITH MANUAL ON UNIFORM TRAFFIC CONTROL DEVICES, LATEST EDITION.
10. THE CONTRACTOR IS REQUIRED TO PERFORM ALL WORK IN THE PUBLIC RIGHT-OF-WAY IN ACCORDANCE WITH THE APPROPRIATE GOVERNING AUTHORITY AND SHALL BE RESPONSIBLE FOR THE PROCUREMENT OF STREET OPENING PERMITS.
11. THE CONTRACTOR IS REQUIRED TO RETAIN AN OSHA CERTIFIED SAFETY INSPECTOR TO BE PRESENT ON SITE AT ALL TIMES DURING CONSTRUCTION & DEMOLITION ACTIVITIES.
12. SHOULD AN EMPLOYEE OF STONEFIELD ENGINEERING & DESIGN, LLC. BE PRESENT ON SITE AT ANY TIME DURING CONSTRUCTION, IT DOES NOT RELIEVE THE CONTRACTOR OF ANY OF THE RESPONSIBILITIES AND REQUIREMENTS LISTED IN THE NOTES WITHIN THIS PLAN SET.

20' 0' 20' 40'

GRAPHIC SCALE IN FEET
1" = 20'

ISSUE	DATE	BY	DESCRIPTION
3	04/16/2025	JD/KG	RESUBMISSION FOR SITE PLAN APPROVAL
2	04/09/2025	JD/KG	UPDATE FOR DTE COORDINATION
1	03/14/2025	JD/KG	FOR SITE PLAN APPROVAL

NOT APPROVED FOR CONSTRUCTION

STONEFIELD engineering & design
Birmingham, MI · New York, NY · Salem, MA
Princeton, NJ · Tampa, FL · Rutherford, NJ
www.stonefieldeng.com
555 S. Old Woodward Avenue, Suite 12L, Birmingham, MI 48009
Phone 248.247.1115

SITE DEVELOPMENT PLANS

JOHNNY'S EXPRESS CAR WASH

PROPOSED AUTO WASH

PARCEL ID: 137-99-0004-001 & PART OF 137-99-0004-002
30207 PLYMOUTH ROAD
CITY OF LIVONIA
WAYNE COUNTY, MICHIGAN

STONEFIELD engineering & design

SCALE: 1" = 20' | PROJECT ID: DET-240419

TITLE: SITE PLAN

DRAWING: C-3

V:\DET\2024\DET-240419 PILLAR CONSTRUCTION - 30207 PLYMOUTH ROAD, LIVONIA, MI\CADD\PLOT\SDP-03-04-SITE.DWG

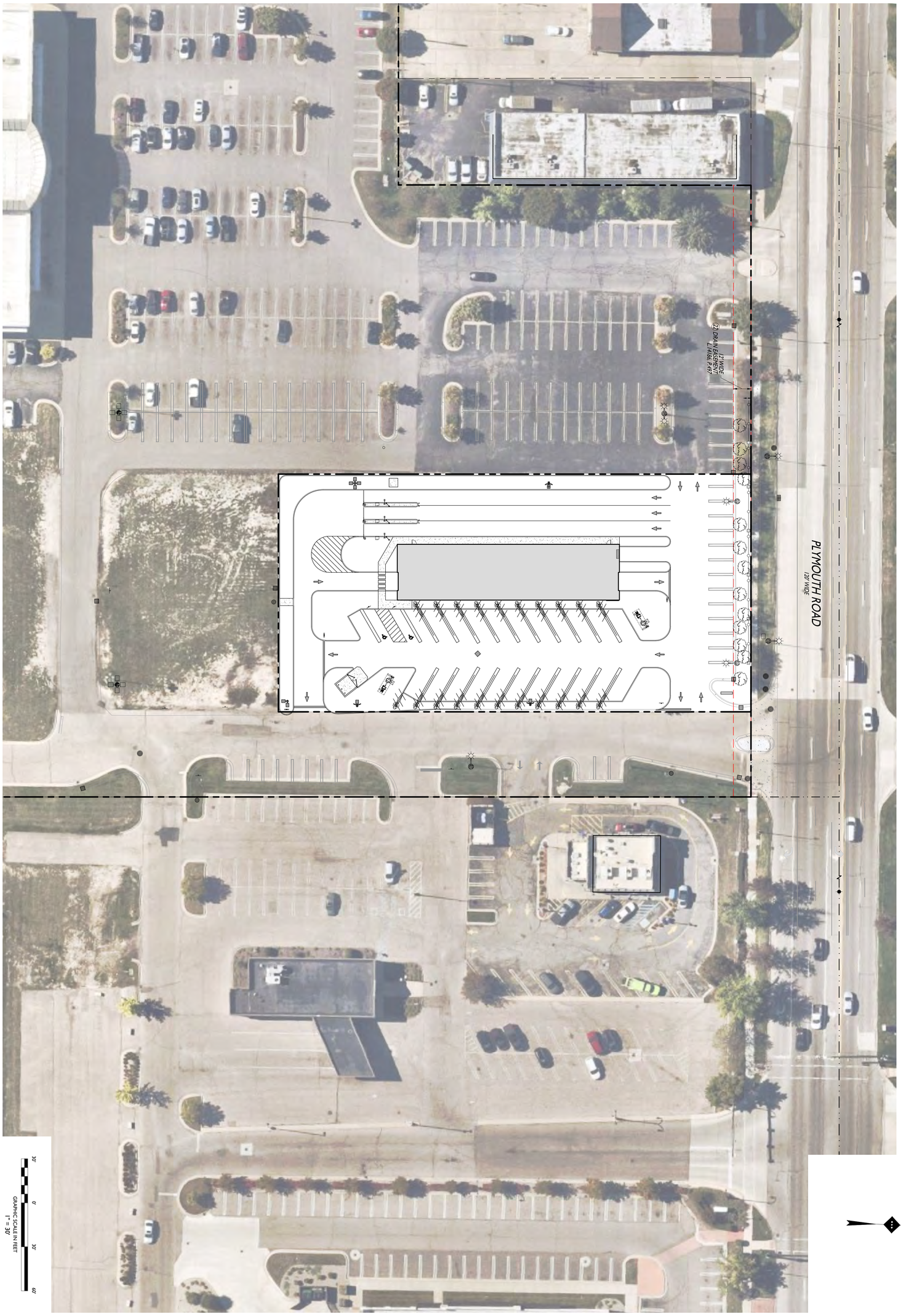

SITE DEVELOPMENT PLANS

JOHNNY'S EXPRESS CAR WASH

PROPOSED AUTO WASH

PARCEL ID: 137-99-0004-001 & PART OF 137-99-0004-002
30207 PLYMOUTH ROAD
CITY OF LIVONIA
WAYNE COUNTY, MICHIGAN

STONEFIELD engineering & design

Birmingham, MI · New York, NY · Salem, MA
Princeton, NJ · Tampa, FL · Rutherford, NJ
www.stonefieldeng.com

555 S. Old Woodward Avenue, Suite 12L, Birmingham, MI 48009
Phone 248.247.1115

NOT APPROVED FOR CONSTRUCTION

ISSUE	DATE	BY	DESCRIPTION
3	04/16/2025	JD/KG	RESUBMISSION FOR SITE PLAN APPROVAL
2	04/09/2025	JD/KG	UPDATE FOR DTE COORDINATION
1	03/14/2025	JD/KG	FOR SITE PLAN APPROVAL

STONEFIELD engineering & design

STATE OF MICHIGAN · JOHN T. CONSTANTINO · LICENSED PROFESSIONAL ENGINEER

SCALE: 1" = 30' | PROJECT ID: DET-240419

TITLE: OVERALL SITE PLAN

DRAWING: C-4

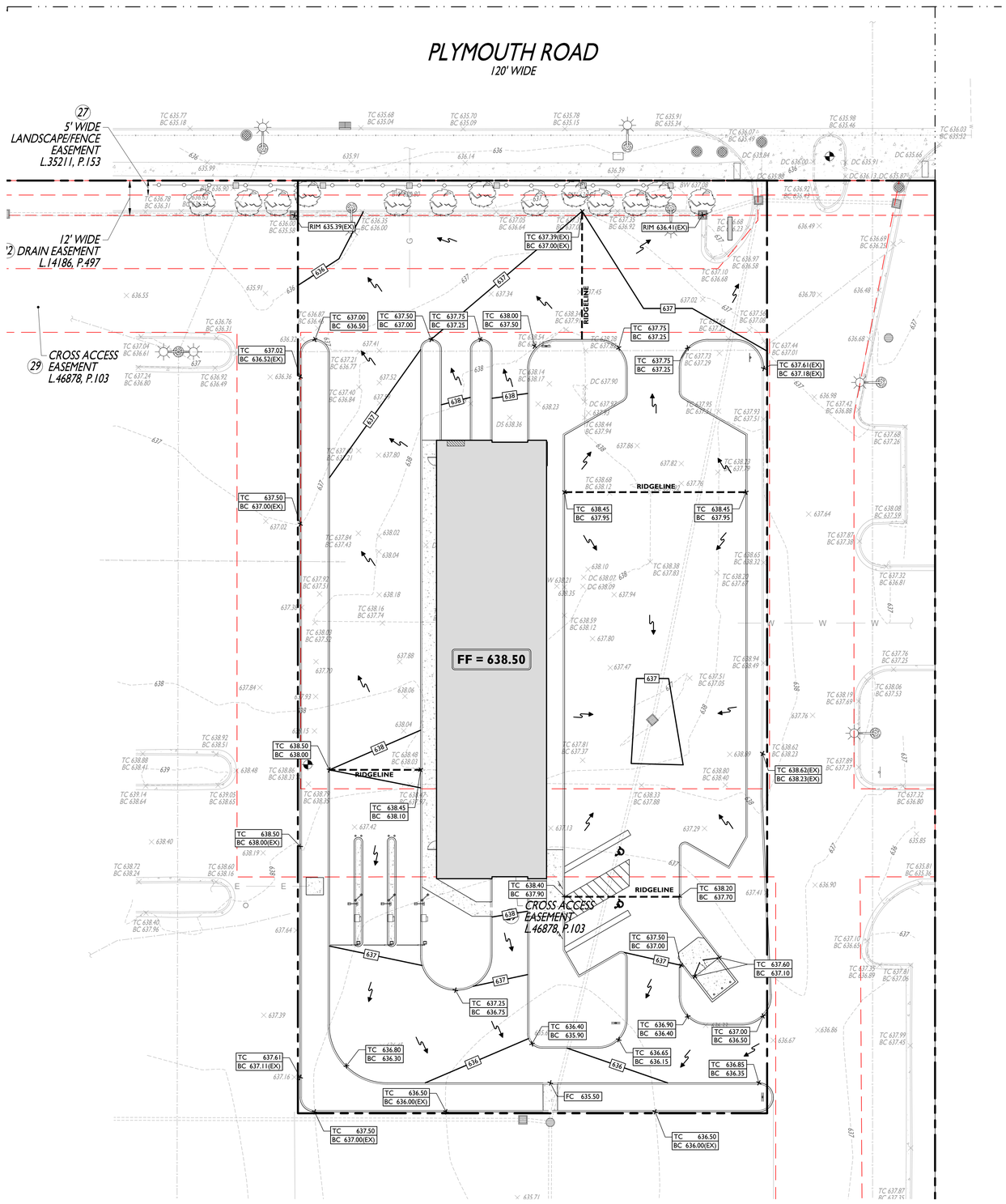

BENCHMARKS:

BENCHMARK #1 = MAG NAIL = 636.37 (NAVD88)
IN CONCRETE ISLAND AT ENTRANCE TO PLYMOUTH ROAD

BENCHMARK #2 = MAG NAIL = 638.33 (NAVD88)
IN PAVEMENT AT SOUTHWEST CORNER OF PARCEL 137-99-004-001

SITE IS ACCOUNTED FOR IN EXISTING REGIONAL DETENTION POND.

SYMBOL	DESCRIPTION
	PROPERTY LINE
100	PROPOSED GRADING CONTOUR
RIDGELINE	PROPOSED GRADING RIDGELINE
	PROPOSED DIRECTION OF DRAINAGE FLOW
G 100.00	PROPOSED GRADE SPOT SHOT
TC 100.50 BC 100.00	PROPOSED TOP OF CURB / BOTTOM OF CURB SPOT SHOT
FC 100.00	PROPOSED FLUSH CURB SPOT SHOT
	PROPOSED STORMWATER STRUCTURES
	PROPOSED STORMWATER PIPING

GRADING NOTES

1. ALL SOIL AND MATERIAL REMOVED FROM THE SITE SHALL BE DISPOSED OF IN ACCORDANCE WITH LOCAL, STATE, AND FEDERAL REQUIREMENTS. ANY GROUNDWATER DE-WATERING PRACTICES SHALL BE PERFORMED UNDER THE SUPERVISION OF A QUALIFIED PROFESSIONAL. THE CONTRACTOR IS REQUIRED TO OBTAIN ALL NECESSARY PERMITS FOR THE DISCHARGE OF DE-WATERED GROUNDWATER. ALL SOIL IMPORTED TO THE SITE SHALL BE CERTIFIED CLEAN FILL. CONTRACTOR SHALL MAINTAIN RECORDS OF ALL FILL MATERIALS BROUGHT TO THE SITE.
2. THE CONTRACTOR IS REQUIRED TO PROVIDE TEMPORARY AND/OR PERMANENT SHORING WHERE REQUIRED DURING EXCAVATION ACTIVITIES, INCLUDING BUT NOT LIMITED TO UTILITY TRENCHES, TO ENSURE THE STRUCTURAL INTEGRITY OF NEARBY STRUCTURES AND STABILITY OF THE SURROUNDING SOILS.
3. PROPOSED TOP OF CURB ELEVATIONS ARE GENERALLY 4 INCHES TO 7 INCHES ABOVE EXISTING GRADES UNLESS OTHERWISE NOTED. THE CONTRACTOR WILL SUPPLY ALL STAKEOUT CURB GRADE SHEETS TO STONEFIELD ENGINEERING & DESIGN, LLC. FOR REVIEW AND APPROVAL PRIOR TO POURING CURBS.
4. THE CONTRACTOR IS RESPONSIBLE TO SET ALL PROPOSED UTILITY COVERS AND RESET ALL EXISTING UTILITY COVERS WITHIN THE PROJECT LIMITS TO PROPOSED GRADE IN ACCORDANCE WITH ANY APPLICABLE MUNICIPAL, COUNTY, STATE AND/OR UTILITY AUTHORITY REGULATIONS.
5. MINIMUM SLOPE REQUIREMENTS TO PREVENT PONDING SHALL BE AS FOLLOWS:
   - CURB GUTTER: 0.50%
   - CONCRETE SURFACES: 1.00%
   - ASPHALT SURFACES: 1.00%
6. A MINIMUM SLOPE OF 1.00% SHALL BE PROVIDED AWAY FROM ALL BUILDINGS. THE CONTRACTOR SHALL ENSURE POSITIVE DRAINAGE FROM THE BUILDING IS ACHIEVED AND SHALL NOTIFY STONEFIELD ENGINEERING & DESIGN, LLC. IF THIS CONDITION CANNOT BE MET.
7. FOR PROJECTS WHERE BASEMENTS ARE PROPOSED, THE DEVELOPER IS RESPONSIBLE TO DETERMINE THE DEPTH TO GROUNDWATER AT THE LOCATION OF THE PROPOSED STRUCTURE. IF GROUNDWATER IS ENCOUNTERED WITHIN THE BASEMENT AREA, SPECIAL CONSTRUCTION METHODS SHALL BE UTILIZED AND REVIEWED/APPROVED BY THE CONSTRUCTION CODE OFFICIAL. IF SUMP PUMPS ARE UTILIZED, ALL DISCHARGES SHALL BE CONNECTED DIRECTLY TO THE PUBLIC STORM SEWER SYSTEM WITH APPROVAL FROM THE GOVERNING STORM SEWER SYSTEM AUTHORITY.

DRAINAGE AND UTILITY NOTES

1. THE CONTRACTOR TO PERFORM A TEST PIT PRIOR TO CONSTRUCTION (RECOMMEND 30 DAYS PRIOR) AT LOCATIONS OF EXISTING UTILITY CROSSINGS FOR STORMWATER IMPROVEMENTS. SHOULD A CONFLICT EXIST, THE CONTRACTOR SHALL IMMEDIATELY NOTIFY STONEFIELD ENGINEERING & DESIGN, LLC. IN WRITING.
2. CONTRACTOR SHALL START CONSTRUCTION OF STORM LINES AT THE LOWEST INVERT AND WORK UP-GRADIENT.
3. THE CONTRACTOR IS REQUIRED TO CALL THE APPROPRIATE AUTHORITY FOR NOTICE OF CONSTRUCTION/EXCAVATION AND UTILITY MARK OUT PRIOR TO THE START OF CONSTRUCTION IN ACCORDANCE WITH STATE LAW. CONTRACTOR IS REQUIRED TO CONFIRM THE HORIZONTAL AND VERTICAL LOCATIONS OF UTILITIES IN THE FIELD. SHOULD A DISCREPANCY EXIST BETWEEN THE FIELD LOCATION OF A UTILITY AND THE LOCATION SHOWN ON THE PLAN SET OR SURVEY, THE CONTRACTOR SHALL NOTIFY STONEFIELD ENGINEERING & DESIGN, LLC. IMMEDIATELY IN WRITING.
4. THE CONTRACTOR IS RESPONSIBLE TO MAINTAIN A RECORD OF THE AS-BUILT LOCATIONS OF ALL PROPOSED UNDERGROUND INFRASTRUCTURE. THE CONTRACTOR SHALL NOTE ANY DISCREPANCIES BETWEEN THE AS-BUILT LOCATIONS AND THE LOCATIONS DEPICTED ON THE PLAN SET. THIS RECORD SHALL BE PROVIDED TO THE OWNER FOLLOWING COMPLETION OF WORK.

EXCAVATION, SOIL PREPARATION, AND DEWATERING NOTES

1. THE CONTRACTOR IS REQUIRED TO REVIEW THE REFERENCED GEOTECHNICAL DOCUMENTS PRIOR TO CONSTRUCTION. THESE DOCUMENTS SHALL BE CONSIDERED A PART OF THE PLAN SET.
2. THE CONTRACTOR IS REQUIRED TO PREPARE SUBGRADE SOILS BENEATH ALL PROPOSED IMPROVEMENTS AND BACKFILL ALL EXCAVATIONS IN ACCORDANCE WITH RECOMMENDATIONS BY THE GEOTECHNICAL ENGINEER OF RECORD.
3. THE CONTRACTOR IS RESPONSIBLE FOR PROVIDING SHORING FOR ALL EXCAVATIONS AS REQUIRED. CONTRACTOR SHALL HAVE THE SHORING DESIGN PREPARED BY A QUALIFIED PROFESSIONAL. SHORING DESIGNS SHALL BE SUBMITTED TO STONEFIELD ENGINEERING & DESIGN, LLC. AND THE OWNER PRIOR TO THE START OF CONSTRUCTION.
4. THE CONTRACTOR IS RESPONSIBLE FOR ENSURING THAT ALL OPEN EXCAVATIONS ARE PERFORMED AND PROTECTED IN ACCORDANCE WITH THE LATEST OSHA REGULATIONS.
5. THE CONTRACTOR IS RESPONSIBLE FOR ANY DEWATERING DESIGN AND OPERATIONS, AS REQUIRED, TO CONSTRUCT THE PROPOSED IMPROVEMENTS. THE CONTRACTOR SHALL OBTAIN ANY REQUIRED PERMITS FOR DEWATERING OPERATIONS AND GROUNDWATER DISPOSAL.

ADA NOTES

1. THE CONTRACTOR SHALL MAINTAIN A MAXIMUM 2.00% SLOPE IN ANY DIRECTION WITHIN THE ADA PARKING SPACES AND ACCESS AISLES.
2. THE CONTRACTOR SHALL PROVIDE COMPLIANT SIGNAGE AT ALL ADA PARKING AREAS IN ACCORDANCE WITH STATE GUIDELINES.
3. THE CONTRACTOR SHALL MAINTAIN A MAXIMUM 5.00% RUNNING SLOPE AND A MAXIMUM OF 2.00% CROSS SLOPE ALONG WALKWAYS WITHIN THE ACCESSIBLE PATH OF TRAVEL (SEE THE SITE PLAN FOR THE LOCATION OF THE ACCESSIBLE PATH). THE CONTRACTOR IS RESPONSIBLE TO ENSURE THE ACCESSIBLE PATH OF TRAVEL IS 36 INCHES WIDE OR GREATER UNLESS INDICATED OTHERWISE WITHIN THE PLAN SET.
4. THE CONTRACTOR SHALL MAINTAIN A MAXIMUM 2.00% SLOPE IN ANY DIRECTION AT ALL LANDINGS. LANDINGS INCLUDE, BUT ARE NOT LIMITED TO, THE TOP AND BOTTOM OF AN ACCESSIBLE RAMP, AT ACCESSIBLE BUILDING ENTRANCES, AT AN AREA IN FRONT OF A WALK-UP ATM, AND AT TURNING SPACES ALONG THE ACCESSIBLE PATH OF TRAVEL. THE LANDING AREA SHALL HAVE A MINIMUM CLEAR AREA OF 60 INCHES BY 60 INCHES UNLESS INDICATED OTHERWISE WITHIN THE PLAN SET.
5. THE CONTRACTOR SHALL MAINTAIN A MAXIMUM 8.33% RUNNING SLOPE AND A MAXIMUM 2.00% CROSS SLOPE ON ANY CURB RAMPS ALONG THE ACCESSIBLE PATH OF TRAVEL. WHERE PROVIDED, CURB RAMP FLARES SHALL NOT HAVE A SLOPE GREATER THAN 10.00% IF A LANDING AREA IS PROVIDED AT THE TOP OF THE RAMP. FOR ALTERATIONS, A CURB RAMP FLARES SHALL NOT HAVE A SLOPE GREATER THAN 8.33% IF A LANDING AREA IS NOT PROVIDED AT THE TOP OF THE RAMP. CURBS RAMPS SHALL NOT RISE MORE THAN 6 INCHES IN ELEVATION WITHOUT A HANDRAIL. THE CLEAR WIDTH OF A CURB RAMP SHALL BE NO LESS THAN 36 INCHES WIDE.
6. ACCESSIBLE RAMPS WITH A RISE GREATER THAN 6 INCHES SHALL CONTAIN COMPLIANT HANDRAILS ON BOTH SIDES OF THE RAMP AND SHALL NOT RISE MORE THAN 30" IN ELEVATION WITHOUT A LANDING AREA IN BETWEEN RAMP RUNS. LANDING AREAS SHALL ALSO BE PROVIDED AT THE TOP AND BOTTOM OF THE RAMP.
7. A SLIP RESISTANT SURFACE SHALL BE CONSTRUCTED ALONG THE ACCESSIBLE PATH AND WITHIN ADA PARKING AREAS.
8. THE CONTRACTOR SHALL ENSURE A MAXIMUM OF ¼ INCHES VERTICAL CHANGE IN LEVEL ALONG THE ACCESSIBLE PATH. WHERE A CHANGE IN LEVEL BETWEEN ¼ INCHES AND ½ INCHES EXISTS, CONTRACTOR SHALL ENSURE THAT THE TOP ¼ INCH CHANGE IN LEVEL IS BEVELED WITH A SLOPE NOT STEEPER THAN 1 UNIT VERTICAL AND 2 UNITS HORIZONTAL (2:1 SLOPE).
9. THE CONTRACTOR SHALL ENSURE THAT ANY OPENINGS (GAPS OR HORIZONTAL SEPARATION) ALONG THE ACCESSIBLE PATH SHALL NOT ALLOW PASSAGE OF A SPHERE GREATER THAN ½ INCH.

20' 0' 20' 40'
GRAPHIC SCALE IN FEET
1" = 20'

ISSUE	DATE	BY	DESCRIPTION
3	04/16/2025	JD/KG	RESUBMISSION FOR SITE PLAN APPROVAL
2	04/09/2025	JD/KG	UPDATE FOR DTE COORDINATION
1	03/14/2025	JD/KG	FOR SITE PLAN APPROVAL

NOT APPROVED FOR CONSTRUCTION

STONEFIELD engineering & design
Birmingham, MI · New York, NY · Salem, MA
Princeton, NJ · Tampa, FL · Rutherford, NJ
www.stonefieldeng.com
555 S. Old Woodward Avenue, Suite 12L, Birmingham, MI 48009
Phone 248.247.1115

SITE DEVELOPMENT PLANS

JOHNNY'S EXPRESS CAR WASH

PROPOSED AUTO WASH

PARCEL ID: 137-99-0004-001 & PART OF 137-99-0004-002
30307 PLYMOUTH ROAD
CITY OF LIVONIA
WAYNE COUNTY, MICHIGAN

STATE OF MICHIGAN
JONATHAN REID COOKSEY
ENGINEER
No. 6201054277
LICENSED PROFESSIONAL ENGINEER

STONEFIELD engineering & design

SCALE: 1" = 20' | PROJECT ID: DET-240419

TITLE: **GRADING & STORMWATER MANAGEMENT PLAN**

DRAWING: **C-5**

V:\DET\2024\DET-240419 PILLAR CONSTRUCTION - 30307 PLYMOUTH ROAD, LIVONIA, MI\CADD\CITD\SDP-05-GRADING.DWG

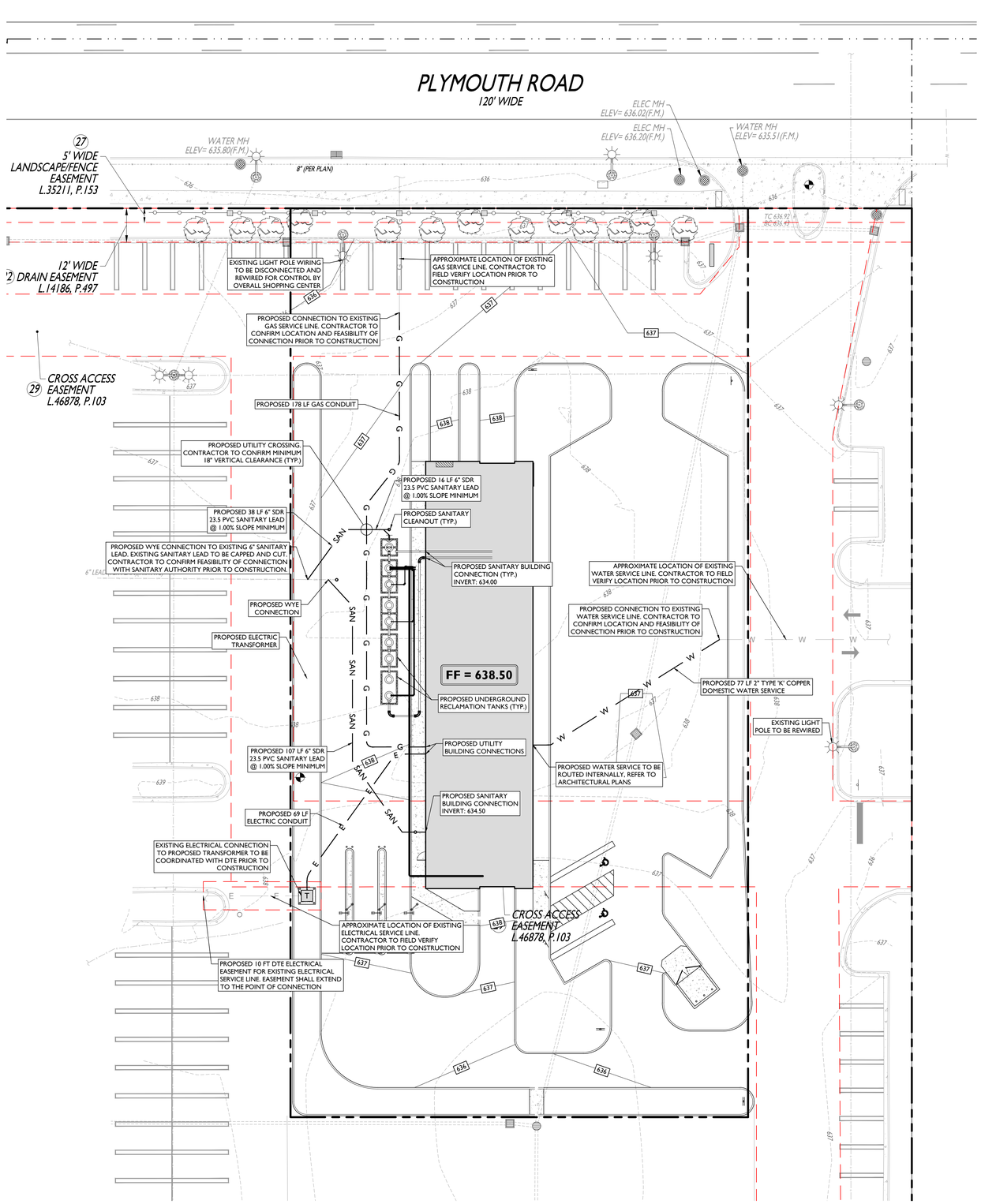

BENCHMARKS:

BENCHMARK #1 = MAG NAIL = 636.37 (NAVD88)
IN CONCRETE ISLAND AT ENTRANCE TO PLYMOUTH ROAD

BENCHMARK #2 = MAG NAIL = 638.33 (NAVD88)
IN PAVEMENT AT SOUTHWEST CORNER OF PARCEL 137-99-004-001

SYMBOL	DESCRIPTION
	PROPERTY LINE
SAN	PROPOSED SANITARY LATERAL
W	PROPOSED DOMESTIC WATER SERVICE
E	PROPOSED ELECTRIC CONDUITS
G	PROPOSED GAS LINE
	PROPOSED VALVE
S	PROPOSED SANITARY MANHOLE / CLEANOUT
T	PROPOSED TRANSFORMER ON CONCRETE PAD WITH BOLLARDS

DRAINAGE AND UTILITY NOTES

1. THE CONTRACTOR IS REQUIRED TO CALL THE APPROPRIATE AUTHORITY FOR NOTICE OF CONSTRUCTION/EXCAVATION AND UTILITY MARK OUT PRIOR TO THE START OF CONSTRUCTION IN ACCORDANCE WITH STATE LAW. CONTRACTOR IS REQUIRED TO CONFIRM THE HORIZONTAL AND VERTICAL LOCATION OF UTILITIES IN THE FIELD. SHOULD A DISCREPANCY EXIST BETWEEN THE FIELD LOCATION OF A UTILITY AND THE LOCATION SHOWN ON THE PLAN SET OR SURVEY, THE CONTRACTOR SHALL NOTIFY STONEFIELD ENGINEERING & DESIGN, LLC. IMMEDIATELY IN WRITING.
2. THE CONTRACTOR IS RESPONSIBLE TO PROTECT AND MAINTAIN IN OPERATION ALL UTILITIES NOT DESIGNATED TO BE REMOVED.
3. THE CONTRACTOR IS RESPONSIBLE FOR REPAIRING ANY DAMAGE TO ANY EXISTING UTILITY IDENTIFIED TO REMAIN WITHIN THE LIMITS OF THE PROPOSED WORK DURING CONSTRUCTION.
4. A MINIMUM HORIZONTAL SEPARATION OF 10 FEET IS REQUIRED BETWEEN ANY SANITARY SEWER SERVICE AND ANY WATER LINES. IF THIS SEPARATION CANNOT BE PROVIDED, A CONCRETE ENCASEMENT SHALL BE UTILIZED FOR THE SANITARY SEWER SERVICE AS APPROVED BY STONEFIELD ENGINEERING & DESIGN, LLC.
5. ALL WATER LINES SHALL BE VERTICALLY SEPARATED ABOVE SANITARY SEWER LINES BY A MINIMUM DISTANCE OF 18 INCHES. IF THIS SEPARATION CANNOT BE PROVIDED, A CONCRETE ENCASEMENT SHALL BE UTILIZED FOR THE SANITARY SEWER SERVICE AS APPROVED BY STONEFIELD ENGINEERING & DESIGN, LLC.
6. THE CONTRACTOR TO PERFORM A TEST PIT PRIOR TO CONSTRUCTION (RECOMMEND 30 DAYS PRIOR) AT LOCATIONS OF EXISTING UTILITY CROSSINGS FOR WATER AND SANITARY SEWER CONNECTION IMPROVEMENTS. SHOULD A CONFLICT EXIST, THE CONTRACTOR SHALL IMMEDIATELY NOTIFY STONEFIELD ENGINEERING & DESIGN, LLC. IN WRITING.
7. THE CONTRACTOR IS RESPONSIBLE FOR COORDINATING GAS, ELECTRIC AND TELECOMMUNICATION CONNECTIONS WITH THE APPROPRIATE GOVERNING AUTHORITY.
8. CONTRACTOR SHALL START CONSTRUCTION OF ANY GRAVITY SEWER AT THE LOWEST INVERT AND WORK UP-GRADIENT.
9. THE CONTRACTOR IS RESPONSIBLE TO MAINTAIN A RECORD SET OF PLANS REFLECTING THE LOCATION OF EXISTING UTILITIES THAT HAVE BEEN CAPPED, ABANDONED, OR RELOCATED BASED ON THE DEMOLITION/REMOVAL ACTIVITIES REQUIRED IN THIS PLAN SET. THIS DOCUMENT SHALL BE PROVIDED TO THE OWNER FOLLOWING COMPLETION OF WORK.
10. THE CONTRACTOR IS RESPONSIBLE TO MAINTAIN A RECORD OF THE AS-BUILT LOCATIONS OF ALL PROPOSED UNDERGROUND INFRASTRUCTURE. THE CONTRACTOR SHALL NOTE ANY DISCREPANCIES BETWEEN THE AS-BUILT LOCATIONS AND THE LOCATIONS DEPICTED WITHIN THE PLAN SET. THIS RECORD SHALL BE PROVIDED TO THE OWNER FOLLOWING COMPLETION OF WORK.

20' 0' 20' 40'
GRAPHIC SCALE IN FEET
1" = 20'

ISSUE	DATE	BY	DESCRIPTION
3	04/16/2025	JD/KG	RESUBMISSION FOR SITE PLAN APPROVAL
2	04/09/2025	JD/KG	UPDATE FOR DTE COORDINATION
1	03/14/2025	JD/KG	FOR SITE PLAN APPROVAL

NOT APPROVED FOR CONSTRUCTION

STONEFIELD engineering & design
Birmingham, MI · New York, NY · Salem, MA
Princeton, NJ · Tampa, FL · Rutherford, NJ
www.stonefieldeng.com
555 S. Old Woodward Avenue, Suite 12L, Birmingham, MI 48009
Phone 248.247.1115

SITE DEVELOPMENT PLANS

JOHNNY'S EXPRESS CAR WASH

PROPOSED AUTO WASH

PARCEL ID: 137-99-0004-001 & PART OF 137-99-0004-002
30207 PLYMOUTH ROAD
CITY OF LIVONIA
WAYNE COUNTY, MICHIGAN

STATE OF MICHIGAN · JONATHAN REID GOOKSEY · ENGINEER · LICENSE NO. 6201047438 · PROFESSIONAL ENGINEER

STONEFIELD engineering & design

SCALE: 1" = 20' | PROJECT ID: DET-240419

TITLE:

UTILITY PLAN

DRAWING:

C-6

V:\DET\2024\DET-240419 PILLAR CONSTRUCTION - 30207 PLYMOUTH ROAD, LIVONIA, MI\CAD\PLOT\DP-06-UTIL.DWG

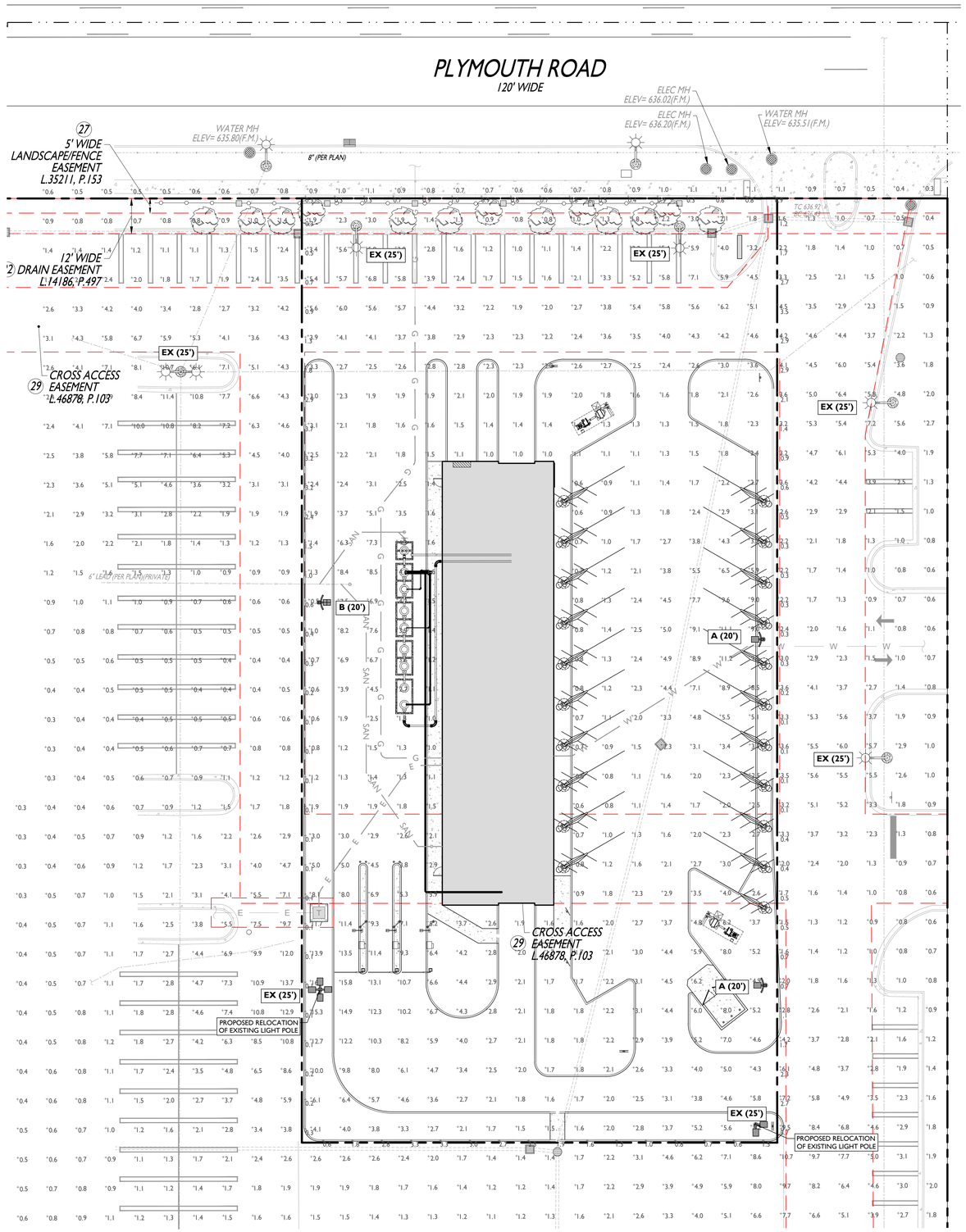

TWO (2) EXISTING LIGHT POLES TO BE RELOCATED TO MAINTAIN EXISTING ILLUMINATION FOR COMMON AREAS ADJACENT TO THE SUBJECT PROPERTY

ALL EXTERIOR LIGHTING SHALL BE TURNED OFF OR DIMMED BETWEEN 9:00 PM AND 7:30 AM

SYMBOL	DESCRIPTION
A (XX')	PROPOSED LIGHTING FIXTURE (MOUNTING HEIGHT)
+X.X	PROPOSED LIGHTING INTENSITY (FOOTCANDLES)
	PROPOSED AREA LIGHT

PROPOSED LUMINAIRE SCHEDULE

SYMBOL	LABEL	QUANTITY	SECURITY LIGHTING	DISTRIBUTION	LLF	MANUFACTURER	CONTROL	IES FILE
	A	2	MIRADA MEDIUM OUTDOOR LED AREA LIGHT - 36,000K LUMEN PACKAGE	TYPE IV	0.9	LSI LIGHTING	PHOTOCELL	MRM-LED-36L-SIL-4-40-70CRI-IL
	B	1	MIRADA MEDIUM OUTDOOR LED AREA LIGHT - 24,000K LUMEN PACKAGE	TYPE II	0.9	LSI LIGHTING	PHOTOCELL	MRM-LED-24L-SIL-2-50-70CRI-IL

Mirada Medium Outdoor LED Area Light

Have questions? Call us at (800) 436-7800

Type : _____

ORDERING GUIDE

Back to Quick Links

TYPICAL ORDER EXAMPLE: MRM LED 36L SIL FTA UNV DIM 50 70CRI ALSCS04 BRZ IL

Prefix	Light Source	Lumen Package	Lens	Distribution	Orientation[2]	Voltage	Driver
MRM - Mirada Medium Area Light	**LED**	**7L** - 7,000 lms, 48W **9L** - 9,000 lms, 62W **12L** - 12,000 lms, 85W **18L** - 18,000 lms, 135W **24L** - 24,000 lms, 176W **30L** - 30,000 lms, 232W **36L** - 36,000 lms, 288W **42L** - 42,000 lms, 314W **48L** - 48,000 lms, 402W **55L** - 55,000 lms, 438W Custom Lumen Packages[3]	**SIL** - Silicone	**2** - Type 2 **3** - Type 3 **4** - Type 4 **5W** - Type 5 Wide **FT** - Forward Throw **FTA** - Forward Throw Automotive **AM** - Automotive Merchandise **LC** - Left Corner **RC** - Right Corner	**(blank)** - standard **L** - Optics rotated left 90° **R** - Optics rotated right 90°	**UNV** - Universal Voltage (120-277V) **HV** - High Voltage (347-480V)	**DIM** - 0-10V Dimming (0-10%)

Color Temp	Color Rendering	Finish		Options
50 - 5,000 CCT **40** - 4,000 CCT **30** - 3,000 CCT **AMB** - Phosphor Converted Amber[8]	**70CRI** - 70 CRI	**BLK** - Black **BRZ** - Dark Bronze **GMG** - Gun Metal Gray **GPT** - Graphite	**MSV** - Metallic Silver **PLP** - Platinum Plus **SVG** - Satin Verde Green **WHT** - White	**(Blank)** - None **IH** - Integral Half Louver (Moderate Spill Light Cutoff)[7] **IL** - Integral Louver (Sharp Spill Light Cutoff)[7]

Controls (Choose One)

(Blank) - None

Wireless Controls System
ALSC - AirLink Synapse Control System[9]
ALSCS02 - AirLink Synapse Control System with 12-20' Motion Sensor[8]
ALSCS04 - AirLink Synapse Control System with 20-40' Motion Sensor[8]
ALBM31LR - AirLink Blue Long Range Wireless Motion & Photo Sensor Controller (8-24' mounting height)[10]
ALBM20LR - AirLink Blue Long Range Wireless Motion & Photo Sensor Controller (25-40' mounting height)[10]

Stand-Alone Controls
EXT - 0-10v Dimming leads extended to housing exterior
CR7P - 7-Pin Control Receptacle ANSI C136.41[1]
IMSBT1L - Integral Bluetooth™ Motion and Photocell Sensor (8-24' MH)[10]
IMSBT2L - Integral Bluetooth™ Motion and Photocell Sensor (25-40' MH)[10]

Button Type Photocells
PCI120 - 120V
PCI208-277 - 208-277V
PCI347 - 347V

Need more information? Click here for our glossary

Have additional questions? Call us at (800) 436-7800

ACCESSORY ORDERING INFORMATION[5]

CONTROLS ACCESSORIES Description	Order Number
PC120 Photocell for use with CR7P option (120V)[1]	122514
PC208-277 Photocell for use with CR7P option (208V, 240V, 277V)[1]	122515
Twist Lock Photocell (347V) for use with CR7P	122516
Twist Lock Photocell (480V) for use with CR7P	122518B
AirLink 5 Pin Twist Lock Controller (120-277V Only)[6]	661409
AirLink 7 Pin Twist Lock Controller (120-277V Only)[6]	661410
AirLink 7 Pin Twist Lock Controller (347-480V) [6]	679948
Shorting Cap for use with CR7P[4]	149328

FUSING OPTIONS[7]	
Single Fusing (120V)	See Fusing Accessory Guide
Single Fusing (277V)	
Double Fusing (208V, 240V)	
Double Fusing (480V)	
Double Fusing (347V)	

EXTERNAL SHIELDING OPTIONS	
3" External Shield	See Shielding Guide
6" External Shield	

1. Custom lumen and wattage packages available, consult factory. Values are within industry standard tolerances but not DLC listed.
2. Not available with SW distribution. Is not available with LLPK distributions.
3. Motion sensors are field configurable via an app that can be downloaded from your smartphone's native app store. See controls section for more details.
4. Control device or shorting cap must be ordered separately. See Accessory Ordering Information.
5. Accessories are shipped separately and field installed.
6. Factory installed CR7P option required. See Options.
7. Fusing must be located in hand hole of pole. See Fusing Accessory Guide for compatibility.
8. Only available in 9L, 12L, 18L and 24L Lumen Packages. Consult factory for lead time and availability.
9. Not available with ISL Lumen Package when 347-480V is specified.

©LSI Industries Inc. All Rights Reserved. Specifications and dimensions subject to industry standard tolerances. Specifications subject to change without notice.

GENERAL LIGHTING NOTES

1. THE LIGHTING LEVELS DEPICTED WITHIN THE PLAN SET ARE CALCULATED UTILIZING DATA OBTAINED FROM THE LISTED MANUFACTURER. ACTUAL ILLUMINATION LEVELS AND PERFORMANCE OF ANY PROPOSED LIGHTING FIXTURE MAY VARY DUE TO UNCONTROLLABLE VARIABLES SUCH ARE WEATHER, VOLTAGE SUPPLY, LAMP TOLERANCE, EQUIPMENT SERVICE LIFE AND OTHER VARIABLE FIELD CONDITIONS.
2. WHERE APPLICABLE, THE EXISTING LIGHT LEVELS DEPICTED WITHIN THE PLAN SET SHALL BE CONSIDERED APPROXIMATE. THE EXISTING LIGHT LEVELS ARE BASED ON FIELD OBSERVATIONS AND THE MANUFACTURER'S DATA OF THE ASSUMED OR MOST SIMILAR LIGHTING FIXTURE MODEL.
3. UNLESS NOTED ELSEWHERE WITHIN THIS PLAN SET, THE LIGHT LOSS FACTORS USED IN THE LIGHTING ANALYSIS ARE AS FOLLOWS:
   - LIGHT EMITTING DIODES (LED): 0.90
   - HIGH PRESSURE SODIUM: 0.72
   - METAL HALIDE: 0.72
4. THE CONTRACTOR SHALL NOTIFY STONEFIELD ENGINEERING & DESIGN, LLC, IN WRITING, PRIOR TO THE START OF CONSTRUCTION, OF ANY PROPOSED LIGHTING LOCATIONS THAT CONFLICT WITH EXISTING/ PROPOSED DRAINAGE, UTILITY, OR OTHER IMPROVEMENTS.
5. THE CONTRACTOR IS RESPONSIBLE TO PREPARE A WIRING PLAN AND PROVIDE ELECTRIC SERVICE TO ALL PROPOSED LIGHTING FIXTURES. THE CONTRACTOR IS REQUIRED TO PREPARE AN AS-BUILT PLAN OF WIRING AND PROVIDE COPIES TO THE OWNER AND STONEFIELD ENGINEERING & DESIGN, LLC.

FIXTURE A & B

20' 0' 20' 40'
GRAPHIC SCALE IN FEET
1" = 20'

ISSUE	DATE	BY	DESCRIPTION
3	04/16/2025	JDKG	RESUBMISSION FOR SITE PLAN APPROVAL
2	04/09/2025	JDKG	UPDATE FOR DTE COORDINATION
1	03/14/2025	JDKG	FOR SITE PLAN APPROVAL

NOT APPROVED FOR CONSTRUCTION

STONEFIELD engineering & design
Birmingham, MI · New York, NY · Salem, MA
Princeton, NJ · Tampa, FL · Rutherford, NJ
www.stonefieldeng.com
555 S. Old Woodward Avenue, Suite 12L, Birmingham, MI 48009
Phone 248.247.1115

SITE DEVELOPMENT PLANS
JOHNNY'S EXPRESS CAR WASH
PROPOSED AUTO WASH
PARCEL ID: 137-99-0004-001 & PART OF 137-99-0004-002
30107 PLYMOUTH ROAD
CITY OF LIVONIA
WAYNE COUNTY, MICHIGAN

STATE OF MICHIGAN · JONATHAN REID COOKSEY · LICENSED PROFESSIONAL ENGINEER · MICHIGAN LICENSE NO. 6201061428 · LICENSED PROFESSIONAL ENGINEER

STONEFIELD engineering & design

SCALE: 1" = 20' | PROJECT ID: DET-240419

TITLE: LIGHTING PLAN

DRAWING: C-7

V:\DET2024\DET-240419 PILLAR CONSTRUCTION - 30107 PLYMOUTH ROAD, LIVONIA, MI\CADD\PLOT\DSP-01 LIGHT.DWG

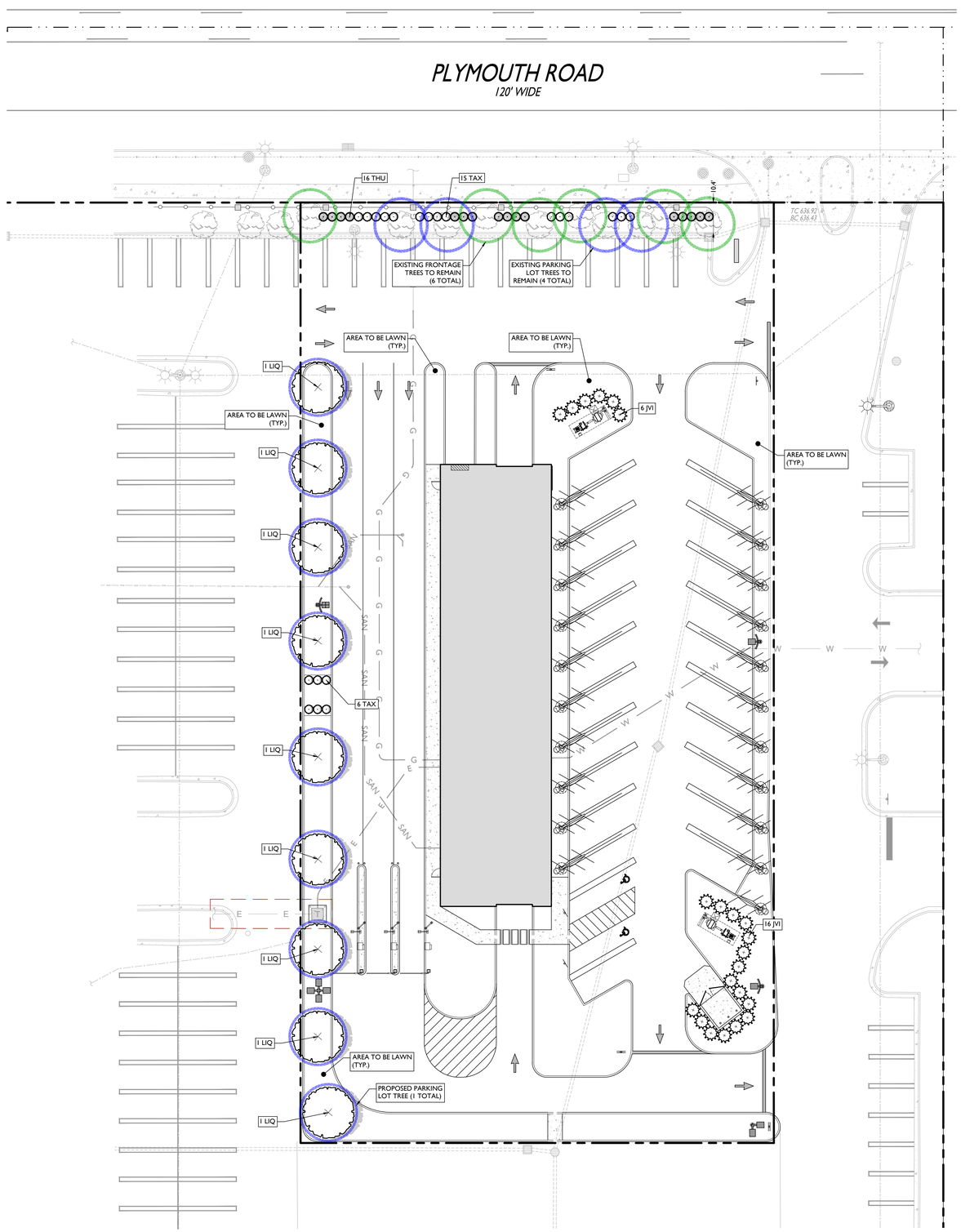

LANDSCAPING REQUIREMENTS

CODE SECTION	REQUIRED	PROPOSED
	FRONTAGE LANDSCAPING	
§ 10.03.(1)	1 DECIDUOUS/EVERGREEN TREE FOR EVERY 40 LF OF FRONTAGE	
	1 ORNAMENTAL TREE FOR EVERY 100 LF OF FRONTAGE	
	8 SHRUBS FOR EVERY 40 LF OF FRONTAGE	
	PLYMOUTH ROAD: 157 FT	
	(157 FT) * (1 TREE / 40 FT FRONTAGE) = 4 DECIDUOUS TREES	4 EXISTING TREES
	(157 FT) * (1 TREE / 100 FT FRONTAGE) = 2 ORNAMENTAL TREES	2 EXISTING TREES
	(157 FT) * (8 SHRUBS / 40 FT FRONTAGE) = 31 SHRUBS	31 SHRUBS
	PARKING LOT SCREENING	
§ 10.03.(2)(A)	LANDSCAPING REQUIRED BETWEEN PARKING AREAS AND THE R.O.W. WITHIN 10 FT OF PARKING	COMPLIES
§ 10.03.(2)(A)(i)	LANDSCAPING WIDTH: 5 FT	10.4 FT
	OPAQUE LANDSCAPING SCREEN REQUIRED	COMPLIES
	MINIMUM HEIGHT: 3 FT	COMPLIES
	MINIMUM VEHICLE OVERHANG: 2 FT	COMPLIES
§ 10.03.(5)	10 FT BUFFER WITH 1 TREE FOR EVERY 30 LF ADJACENT TO C-2	COMPLIES
	(266 LF) * (1 TREE / 30 LF) = 9 TREES	9 PROPOSED TREES
	INTERIOR PARKING LOT LANDSCAPING	
§ 10.03.(2)(B)(i)	5% OF PARKING AREA SHALL BE LANDSCAPED	
	(31,005 SF) * (0.05) = 1,550 SF	4,547 SF (14.7%)
	MINIMUM AREA: 300 SF	COMPLIES
	MINIMUM WIDTH: 10 FT	COMPLIES
§ 10.03.(2)(B)(ii)	1 TREE FOR EVERY 300 SF OF LANDSCAPING	
	(1,550 SF) * (1 TREE / 300 SF) = 5 TREES	4 EXISTING TREES 9 PROPOSED TREES
§ 10.03.(2)(B)(vi)	TERMINAL ISLANDS REQUIRED, NO MORE THAN 20 SPACES IN A SINGLE ROW	COMPLIES
	R.O.W. AND EASEMENT LANDSCAPING	
§ 10.03.(10)	ANY PUBLIC R.O.W. AND ACCESS EASEMENT AREAS ADJACENT TO REQUIRED LANDSCAPED AREAS SHALL BE PLANTED WITH GRASS OR OTHER SUITABLE GROUNDCOVER	COMPLIES

PLANT SCHEDULE

SYMBOL	CODE	QTY	BOTANICAL NAME	COMMON NAME	SIZE	CONTAINER
DECIDUOUS TREES						
	LIQ	9	LIQUIDAMBAR STYRACIFLUA 'ROTUNDILOBA'	ROUND-LOBED SWEET GUM	3" - 3.5" CAL	B&B
EVERGREEN TREES						
	JVI	22	JUNIPERUS VIRGINIANA 'J.N. SELECT GREEN'	EMERALD FEATHER EASTERN REDCEDAR	5' - 6' HT	B&B
EVERGREEN SHRUBS						
	TAX	21	TAXUS X MEDIA 'DENSIFORMIS'	DENSE ANGLO-JAPANESE YEW	18" - 24"	POT
	THU	16	THUJA OCCIDENTALIS 'ANNA VAN VLOTEN'	ANNA'S MAGIC BALL ARBORVITAE	18" - 24"	POT

NOTE: IF ANY DISCREPANCIES OCCUR BETWEEN AMOUNTS SHOWN ON THE LANDSCAPE PLAN AND WITHIN THE PLANT LIST, THE PLAN SHALL DICTATE.

SYMBOL	DESCRIPTION
	PROPOSED FRONTAGE TREES
	PROPOSED PARKING LOT TREES

Know what's **below**
Call before you dig.

IRRIGATION NOTE:

IRRIGATION CONTRACTOR TO PROVIDE A DESIGN FOR AN IRRIGATION SYSTEM SEPARATING PLANTING BEDS FROM LAWN AREA. PRIOR TO CONSTRUCTION, DESIGN IS TO BE SUBMITTED TO THE PROJECT LANDSCAPE DESIGNER FOR REVIEW AND APPROVAL. WHERE POSSIBLE, DRIP IRRIGATION AND OTHER WATER CONSERVATION TECHNIQUES SUCH AS RAIN SENSORS SHALL BE IMPLEMENTED. CONTRACTOR TO VERIFY MAXIMUM ON SITE DYNAMIC WATER PRESSURE AVAILABLE MEASURED IN PSI. PRESSURE REDUCING DEVICES OR BOOSTER PUMPS SHALL BE PROVIDED TO MEET SYSTEM PRESSURE REQUIREMENTS. DESIGN TO SHOW ALL VALVES, PIPING, HEADS, BACKFLOW PREVENTION, METERS, CONTROLLERS, AND SLEEVES WITHIN HARDSCAPE AREAS.

LANDSCAPING NOTES

1. THE CONTRACTOR SHALL RESTORE ALL DISTURBED GRASS AND LANDSCAPED AREAS TO MATCH EXISTING CONDITIONS UNLESS INDICATED OTHERWISE WITHIN THE PLAN SET.
2. THE CONTRACTOR SHALL RESTORE ALL DISTURBED LAWN AREAS WITH A MINIMUM 4 INCH LAYER OF TOPSOIL AND SEED.
3. THE CONTRACTOR SHALL RESTORE MULCH AREAS WITH A MINIMUM 3 INCH LAYER OF MULCH .
4. THE MAXIMUM SLOPE ALLOWABLE IN LANDSCAPE RESTORATION AREAS SHALL BE 3 FEET HORIZONTAL TO 1 FOOT VERTICAL (3:1 SLOPE) UNLESS INDICATED OTHERWISE WITHIN THE PLAN SET.
5. THE CONTRACTOR IS REQUIRED TO LOCATE ALL SPRINKLER HEADS IN AREA OF LANDSCAPING DISTURBANCE PRIOR TO CONSTRUCTION. THE CONTRACTOR SHALL RELOCATE SPRINKLER HEADS AND LINES IN ACCORDANCE WITH OWNER'S DIRECTION WITHIN AREAS OF DISTURBANCE.
6. THE CONTRACTOR SHALL ENSURE THAT ALL DISTURBED LANDSCAPED AREAS ARE GRADED TO MEET FLUSH AT THE ELEVATION OF WALKWAYS AND TOP OF CURB ELEVATIONS EXCEPT UNLESS INDICATED OTHERWISE WITHIN THE PLAN SET. NO ABRUPT CHANGES IN GRADE ARE PERMITTED IN DISTURBED LANDSCAPING AREAS.

20' 0' 20' 40'
GRAPHIC SCALE IN FEET
1" = 20'

ISSUE	DATE	BY	DESCRIPTION
3	04/16/2025	JD/KG	RESUBMISSION FOR SITE PLAN APPROVAL
2	04/09/2025	JD/KG	UPDATE FOR DTE COORDINATION
1	03/14/2025	JD/KG	FOR SITE PLAN APPROVAL

NOT APPROVED FOR CONSTRUCTION

STONEFIELD engineering & design
Birmingham, MI · New York, NY · Salem, MA
Princeton, NJ · Tampa, FL · Rutherford, NJ
www.stonefieldeng.com
555 S. Old Woodward Avenue, Suite 12L, Birmingham, MI 48009
Phone 248.247.1115

SITE DEVELOPMENT PLANS

JOHNNY'S EXPRESS CAR WASH

PROPOSED AUTO WASH

PARCEL ID: 137-99-0004-001 & PART OF 137-99-0004-002
30207 PLYMOUTH ROAD
CITY OF LIVONIA
WAYNE COUNTY, MICHIGAN

STATE OF MICHIGAN
JONATHAN REID COOKSEY
ENGINEER
No. 6201058127
LICENSED PROFESSIONAL ENGINEER

STONEFIELD engineering & design

SCALE: 1" = 20' | PROJECT ID: DET-240419

TITLE:

LANDSCAPING PLAN

DRAWING:

C-8

V:\DET\2024\DET-240419 PILLAR CONSTRUCTION - 30207 PLYMOUTH ROAD, LIVONIA, MI\CADD\PLOT\DP-08-09-LANDSCAPE.DWG

NOTES:

1. FOR CONTAINER-GROWN TREES, USE FINGERS OR SMALL HAND TOOLS TO PULL THE ROOTS OUT OF THE OUTER LAYER OF POTTING SOIL; THEN CUT OR PULL APART ANY ROOTS CIRCLING THE PERIMETER OF THE CONTAINER.
2. THOROUGHLY SOAK THE TREE ROOT BALL AND ADJACENT PREPARED SOIL SEVERAL TIMES DURING THE FIRST MONTH AFTER PLANTING AND REGULARLY THROUGHOUT THE FOLLOWING TWO SUMMERS.
3. SOIL AMENDMENTS:
   - MODIFY HEAVY CLAY OR SILT SOILS (MORE THAN 40% CLAY OR SILT) BY ADDING COMPOSTED PINE BARK (UP TO 30% BY VOLUME) OR GYPSUM
   - MODIFY EXTREMELY SANDY SOILDS (MORE THAN 85% SAND) BY ADDING ORGANIC MATTER AND/OR DRY, SHREDDED CLAY LOAM UP TO 30% OF THE TOTAL MIX

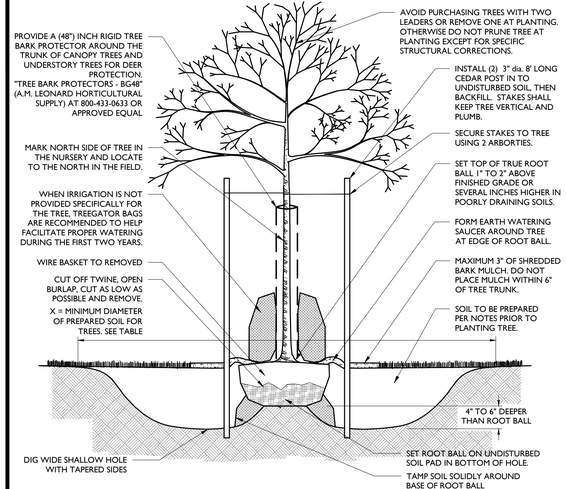

DECIDUOUS TREE PLANTING DETAIL

NOT TO SCALE

1

NOTES:

1. FOR CONTAINER-GROWN TREES, USE FINGERS OR SMALL HAND TOOLS TO PULL THE ROOTS OUT OF THE OUTER LAYER OF POTTING SOIL; THEN CUT OR PULL APART ANY ROOTS CIRCLING THE PERIMETER OF THE CONTAINER.
2. THOROUGHLY SOAK THE TREE ROOT BALL AND ADJACENT PREPARED SOIL SEVERAL TIMES DURING THE FIRST MONTH AFTER PLANTING AND REGULARLY THROUGHOUT THE FOLLOWING TWO SUMMERS.
3. SOIL AMENDMENTS:
   - MODIFY HEAVY CLAY OR SILT SOILS (MORE THAN 40% CLAY OR SILT) BY ADDING COMPOSTED PINE BARK (UP TO 30% BY VOLUME) OR GYPSUM
   - MODIFY EXTREMELY SANDY SOILS (MORE THAN 85% SAND) BY ADDING ORGANIC MATTER AND/OR DRY, SHREDDED CLAY LOAM UP TO 30% OF THE TOTAL MIX

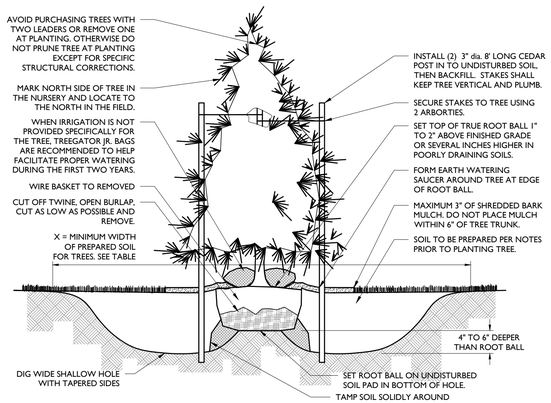

CONIFEROUS TREE PLANTING DETAIL

NOT TO SCALE

2

GENERAL LANDSCAPING NOTES:

1. THE LANDSCAPE CONTRACTOR SHALL FURNISH ALL MATERIALS AND PERFORM ALL WORK IN ACCORDANCE WITH THESE SPECIFICATIONS, APPROVED OR FINAL DRAWINGS, AND INSTRUCTIONS PROVIDED BY THE PROJECT LANDSCAPE DESIGNER, MUNICIPAL OFFICIALS, OR OWNER/OWNER'S REPRESENTATIVE. ALL WORK COMPLETED AND MATERIALS FURNISHED AND INSTALLED SHALL BE IN STRICT ACCORDANCE WITH THE INTENTION OF THE SPECIFICATIONS, DRAWINGS, AND INSTRUCTIONS AND EXECUTED WITH THE STANDARD LEVEL OF CARE FOR THE LANDSCAPE INDUSTRY.
2. WORK MUST BE CARRIED OUT ONLY DURING WEATHER CONDITIONS FAVORABLE TO LANDSCAPE CONSTRUCTION AND TO THE HEALTH AND WELFARE OF PLANTS. THE SUITABILITY OF SUCH WEATHER CONDITIONS SHALL BE DETERMINED BY THE PROJECT LANDSCAPE DESIGNER OR GOVERNING MUNICIPAL OFFICIAL.
3. IT IS THE RESPONSIBILITY OF THE LANDSCAPE CONTRACTOR, BEFORE ORDERING OR PURCHASING MATERIALS, TO PROVIDE SAMPLES OF THOSE MATERIALS TO THE PROJECT LANDSCAPE DESIGNER OR GOVERNING MUNICIPAL OFFICIAL FOR APPROVAL, IF SO REQUESTED.
4. IF SAMPLES ARE REQUESTED, THE LANDSCAPE CONTRACTOR IS TO SUBMIT CERTIFICATION TAGS FROM TREES, SHRUBS AND SEED VERIFYING TYPE AND PURITY.
5. UNLESS OTHERWISE AUTHORIZED BY THE PROJECT LANDSCAPE DESIGNER OR GOVERNING MUNICIPAL OFFICIAL, THE LANDSCAPE CONTRACTOR SHALL PROVIDE NOTICE AT LEAST FORTY-EIGHT HOURS (48 HRS.) IN ADVANCE OF THE ANTICIPATED DELIVERY DATE OF ANY PLANT MATERIALS TO THE PROJECT SITE. A LEGIBLE COPY OF THE INVOICE, SHOWING VARIETIES AND SIZES OF MATERIALS INCLUDED FOR EACH SHIPMENT SHALL BE FURNISHED TO THE PROJECT LANDSCAPE DESIGNER, OR GOVERNING MUNICIPAL OFFICIAL.
6. THE PROJECT LANDSCAPE DESIGNER OR GOVERNING MUNICIPAL OFFICIAL RESERVES THE RIGHT TO INSPECT AND REJECT PLANTS AT ANY TIME AND AT ANY PLACE.

PROTECTION OF EXISTING VEGETATION NOTES:

1. BEFORE COMMENCING WORK, ALL EXISTING VEGETATION WHICH COULD BE IMPACTED AS A RESULT OF THE PROPOSED CONSTRUCTION ACTIVITIES MUST BE PROTECTED FROM DAMAGE BY THE INSTALLATION OF TREE PROTECTION FENCING. FENCING SHALL BE LOCATED AT THE DRIP-LINE OR LIMIT OF DISTURBANCE AS DEPICTED WITHIN THE APPROVED OR FINAL PLAN SET, ESTABLISHING THE TREE PROTECTION ZONE. FENCE INSTALLATION SHALL BE IN ACCORDANCE WITH THE PROVIDED "TREE PROTECTION FENCE DETAIL." NO WORK MAY BEGIN UNTIL THIS REQUIREMENT IS FULFILLED. THE FENCING SHALL BE INSPECTED REGULARLY BY THE LANDSCAPE CONTRACTOR AND MAINTAINED UNTIL ALL CONSTRUCTION ACTIVITIES HAVE BEEN COMPLETED.
2. IN ORDER TO AVOID DAMAGE TO ROOTS, BARK OR LOWER BRANCHES, NO VEHICLE, EQUIPMENT, DEBRIS, OR OTHER MATERIALS SHALL BE DRIVEN, PARKED OR PLACED WITHIN THE TREE PROTECTION ZONE. ALL ON-SITE CONTRACTORS SHALL USE ANY AND ALL PRECAUTIONARY MEASURES WHEN PERFORMING WORK AROUND TREES, WALKS, PAVEMENTS, UTILITIES, AND ANY OTHER FEATURES EITHER EXISTING OR PREVIOUSLY INSTALLED UNDER THIS CONTRACT.
3. IN RARE INSTANCES WHERE EXCAVATING, FILL, OR GRADING IS REQUIRED WITHIN THE DRIP-LINE OF TREES TO REMAIN, THE WORK SHALL BE PERFORMED AS FOLLOWS:
   - TRENCHING: WHEN TRENCHING OCCURS AROUND TREES TO REMAIN, THE TREE ROOTS SHALL NOT BE CUT, BUT THE TRENCH SHALL BE TUNNELED UNDER OR AROUND THE ROOTS BY CAREFUL HAND DIGGING AND WITHOUT INJURY TO THE ROOTS. NO ROOTS, LIMBS, OR WOODS ARE TO HAVE ANY PAINT OR MATERIAL APPLIED TO ANY SURFACE.
   - RAISING GRADES: WHEN THE GRADE AT AN EXISTING TREE IS BELOW THE NEW FINISHED GRADE, AND FILL NOT EXCEEDING 6 INCHES (6") IS REQUIRED, CLEAN, WASHED GRAVEL FROM ONE TO TWO INCHES (1" - 2") IN SIZE SHALL BE PLACED DIRECTLY AROUND THE TREE TRUNK. THE GRAVEL SHALL EXTEND OUT FROM THE TRUNK ON ALL SIDES A MINIMUM OF 18 INCHES (18") AND FINISH APPROXIMATELY TWO INCHES (2") ABOVE THE FINISH GRADE AT TREE. INSTALL GRAVEL BEFORE ANY EARTH FILL IS PLACED. NEW EARTH FILL SHALL NOT BE LEFT IN CONTACT WITH THE TRUNK OF ANY TREE REQUIRING FILL. WHERE FILL EXCEEDING 6 INCHES (6") IS REQUIRED, A DRY LAID TREE WELL SHALL BE CONSTRUCTED. IF APPLICABLE, TREE WELL INSTALLATION SHALL BE IN ACCORDANCE WITH THE PROVIDED "TREE WELL DETAIL."
   - LOWERING GRADES: EXISTING TREES LOCATED IN AREAS WHERE THE NEW FINISHED GRADE IS TO BE LOWERED, SHALL HAVE RE-GRADING WORK DONE BY HAND TO THE INDICATED ELEVATION, NO GREATER THAN SIX INCHES (6"). ROOTS SHALL BE CUT CLEANLY THREE INCHES (3") BELOW FINISHED GRADE UNDER THE DIRECTION OF A LICENSED ARBORIST. WHERE CUT EXCEEDING 6 INCHES (6") IS REQUIRED, A DRY LAID RETAINING WALL SHALL BE CONSTRUCTED. IF APPLICABLE, THE RETAINING WALL INSTALLATION SHALL BE IN ACCORDANCE WITH THE PROVIDED "TREE RETAINING WALL DETAIL."

SOIL PREPARATION AND MULCH NOTES:

1. LANDSCAPE CONTRACTOR SHALL OBTAIN A SOIL TEST OF THE IN-SITU TOPSOIL BY A CERTIFIED SOIL LABORATORY PRIOR TO PLANTING. LANDSCAPE CONTRACTOR SHALL ALLOW FOR A TWO WEEK TURNAROUND TIME FROM SUBMITTAL OF SAMPLE TO NOTIFICATION OF RESULTS.
2. BASED ON SOIL TEST RESULTS, ADJUST THE RATES OF LIME AND FERTILIZER THAT SHALL BE MIXED INTO THE TOP SIX INCHES (6") OF TOPSOIL. THE LIME AND FERTILIZER RATES PROVIDED WITHIN THE "SEED SPECIFICATION" OR "SOD SPECIFICATION" IS APPROXIMATE AND FOR BIDDING PURPOSES ONLY. IF ADDITIONAL AMENDMENTS ARE NECESSARY, ADJUST THE TOPSOIL AS FOLLOWS:
   - MODIFY HEAVY CLAY OR SILT SOILS (MORE THAN 40% CLAY OR SILT) BY ADDING COMPOSTED PINE BARK (UP TO 30% BY VOLUME) OR GYPSUM.
   - MODIFY EXTREMELY SANDY SOILS (MORE THAN 85%) BY ADDING ORGANIC MATTER AND/OR DRY, SHREDDED CLAY LOAM UP TO 30% OF THE TOTAL MIX.
3. TOPSOIL SHALL BE FERTILE, FRIABLE, NATURAL TOPSOIL OF LOAMING CHARACTER, WITHOUT ADMIXTURE OF SUBSOIL MATERIAL OBTAINED FROM A WELL-DRAINED ARABLE SITE, FREE FROM ALL CLAY, LUMPS, COARSE SANDS, STONES, PLANTS, ROOTS, STICKS, AND OTHER FOREIGN MATERIAL GREATER THAN ONE INCH (1").
4. TOPSOIL SHALL HAVE A PH RANGE OF 5.0-7.0 AND SHALL NOT CONTAIN LESS THAN 6% ORGANIC MATTER BY WEIGHT.
5. OBTAIN TOPSOIL ONLY FROM LOCAL SOURCES OR FROM AREAS HAVING SIMILAR SOIL CHARACTERISTICS TO THAT FOUND AT THE PROJECT SITE.
6. CONTRACTOR SHALL PROVIDE A SIX INCH (6") DEEP LAYER OF TOPSOIL IN ALL PLANTING AREAS. TOPSOIL SHALL BE SPREAD OVER A PREPARED SURFACE IN A UNIFORM LAYER TO ACHIEVE THE DESIRED COMPACTED THICKNESS. THE SPREADING OF TOPSOIL SHALL NOT BE CONDUCTED UNDER MUDDY OR FROZEN SOIL CONDITIONS.
7. UNLESS OTHERWISE NOTED IN THE CONTRACT, THE LANDSCAPE CONTRACTOR SHALL BE RESPONSIBLE FOR THE INSTALLATION OF TOPSOIL AND THE ESTABLISHMENT OF FINE-GRADING WITHIN THE DISTURBED AREA OF THE SITE.
8. LANDSCAPE CONTRACTOR SHALL VERIFY THAT THE SUB-GRADE ELEVATION MEETS THE FINISHED GRADE ELEVATION (LESS THE REQUIRED TOPSOIL), IN ACCORDANCE WITH THE APPROVED OR FINAL GRADING PLAN.
9. ALL LAWN AND PLANTING AREAS SHALL BE GRADED TO A SMOOTH, EVEN AND UNIFORM PLANE WITH NO ABRUPT CHANGE OF SURFACE AS DEPICTED WITHIN THE APPROVED OR FINAL CONSTRUCTION SET UNLESS OTHERWISE DIRECTED BY THE PROJECT LANDSCAPE DESIGNER OR MUNICIPAL OFFICIAL.
10. THE CONTRACTOR SHALL BE RESPONSIBLE FOR PROPER SURFACE AND SUBSURFACE PLANT BED DRAINAGE PRIOR TO THE INSTALLATION OF PLANTINGS. IF POOR DRAINAGE CONDITIONS EXIST, CORRECTIVE ACTION SHALL BE TAKEN PRIOR TO INSTALLATION. ALL PLANTING AND LAWN AREAS SHALL BE GRADED AND MAINTAINED TO ALLOW A FREE FLOW OF SURFACE WATER.
11. DOUBLE SHREDDED HARDWOOD MULCH OR APPROVED EQUAL SHALL BE USED AS A THREE INCH (3") TOP DRESSING IN ALL SHRUB PLANTING BEDS AND AROUND ALL TREES PLANTED BY LANDSCAPE CONTRACTOR. GROUND COVER, PERENNIAL, AND ANNUAL PLANTING BEDS SHALL BE MULCHED WITH A TWO INCH (2") TOP DRESSING. SINGLE TREES OR SHRUBS SHALL BE MULCHED TO AVOID CONTACT WITH TRUNK OR PLANT STEM. MULCH SHALL BE OF SUFFICIENT CHARACTER AS NOT TO BE EASILY DISPLACED BY WIND OR WATER RUNOFF.
12. WHENEVER POSSIBLE, THE SOIL PREPARATION AREA SHALL BE CONNECTED FROM PLANTING TO PLANTING.
13. SOIL SHALL BE LOOSENED WITH A BACKHOE OR OTHER LARGE COARSE-TILING EQUIPMENT UNLESS THE SOIL IS FROZEN OR EXCESSIVELY WET. TILING THAT PRODUCES LARGE, COARSE CHUNKS OF SOIL IS PREFERABLE TO TILING THAT RESULTS IN FINE GRAINS UNIFORM IN TEXTURE. AFTER THE AREA IS LOOSENED IT SHALL NOT BE DRIVEN OVER BY ANY VEHICLE.
14. APPLY PRE-EMERGENT WEED CONTROL TO ALL PLANT BEDS PRIOR TO MULCHING. ENSURE COMPATIBILITY BETWEEN PRODUCT AND PLANT MATERIAL.
15. ALL PLANTING SOIL SHALL BE AMENDED WITH THE FOLLOWING:

MYCRO® TREE SAVER - A DRY GRANULAR MYCORRHIZAL FUNGI INOCULANT THAT IS MIXED IN THE BACKFILL WHEN PLANTING TREES AND SHRUBS. IT CONTAINS SPORES OF BOTH ECTOMYCORRHIZAL AND VA MYCORRHIZAL FUNGI (VAM), BENEFICIAL RHIZOSPHERE BACTERIA, TERRA-SORB SUPERABSORBENT HYDROGEL TO REDUCE WATER LEACHING, AND SELECTED ORGANIC MICROBIAL NUTRIENTS.

- DIRECTIONS FOR USE: USE 3-OZ PER EACH FOOT DIAMETER OF THE ROOT BALL, OR 3-OZ PER INCH CALIPER. MIX INTO THE BACKFILL WHEN TRANSPLANTING TREES AND SHRUBS. MIX PRODUCT IN A RING-SHAPED VOLUME OF SOIL AROUND THE UPPER PORTION OF THE ROOT BALL, EXTENDING FROM THE SOIL SURFACE TO A DEPTH OF ABOUT 8 INCHES, AND EXTENDING OUT FROM THE ROOT BALL ABOUT 8 INCHES INTO THE BACKFILL. APPLY WATER TO SOIL SATURATION.
- MYCOR® TREE SAVER® IS EFFECTIVE FOR ALL TREE AND SHRUB SPECIES EXCEPT RHODODENDRONS, AZALEAS, AND MOUNTAIN LAUREL, WHICH REQUIRE ERICOID MYCORRHIZAE.
- SOIL PH: THE FUNGI IN THIS PRODUCT WERE CHOSEN BASED ON THEIR ABILITY TO SURVIVE AND COLONIZE PLANT ROOTS IN A PH RANGE OF 3 TO 9.
- FUNGICIDES: THE USE OF CERTAIN FUNGICIDES CAN HAVE A DETRIMENTAL EFFECT ON THE INOCULATION PROGRAM. SOIL APPLICATION OF ANY FUNGICIDE IS NOT RECOMMENDED FOR TWO WEEKS AFTER APPLICATION.
- OTHER PESTICIDES: HERBICIDES AND INSECTICIDES DO NOT NORMALLY INTERFERE WITH MYCORRHIZAL FUNGAL DEVELOPMENT, BUT MAY INHIBIT THE GROWTH OF SOME TREE AND SHRUB SPECIES IF NOT USED PROPERLY.

HEALTHY START MACRO TABS 12-8-8

- FERTILIZER TABLETS ARE PLACED IN THE UPPER 4 INCHES OF BACKFILL SOIL WHEN PLANTING TREES AND SHRUBS.
- TABLETS ARE FORMULATED FOR LONG-TERM RELEASE BY SLOW BIODEGRADATION, AND LAST UP TO 2 YEARS AFTER PLANTING. TABLETS CONTAIN 12-8-8 NPK FERTILIZER, AS WELL AS A MINIMUM OF SEVEN PERCENT (7%) HUMIC ACID BY WEIGHT, MICROBIAL NUTRIENTS DERIVED FROM SEA KELP, PROTEIN BYPRODUCTS, AND YUCCA SCHIDIGERA, AND A COMPLEMENT OF BENEFICIAL RHIZOSPHERE BACTERIA. THE STANDARD 21 GRAM TABLET IS SPECIFIED HERE. DIRECTIONS FOR USE: FOR PLANTING BALLED & BURLAPPED (B&B) TREES AND SHRUBS, MEASURE THE THICKNESS OF THE TRUNK, AND USE ABOUT 1 TABLET (21-G) PER HALF-INCH. PLACE THE TABLETS DIRECTLY NEXT TO THE ROOT BALL, EVENLY DISTRIBUTED AROUND ITS PERIMETER, AT A DEPTH OF ABOUT 4 INCHES.

PLANT QUALITY AND HANDLING NOTES:

1. ALL PLANT MATERIAL SHALL CONFORM TO THE AMERICAN STANDARD FOR NURSERY STOCK (ANSI Z60.1-2004) OR LATEST REVISION AS PUBLISHED BY THE AMERICAN NURSERY AND LANDSCAPE ASSOCIATION.
2. IN ALL CASES, BOTANICAL NAMES LISTED WITHIN THE APPROVED OR FINAL PLANT LIST SHALL TAKE PRECEDENCE OVER COMMON NAMES.
3. ALL PLANTS SHALL BE OF SELECTED SPECIMEN QUALITY, EXCEPTIONALLY HEAVY, TIGHTLY KNIT, SO TRAINED OR FAVORED IN THEIR DEVELOPMENT AND APPEARANCE AS TO BE SUPERIOR IN FORM, NUMBER OF BRANCHES, COMPACTNESS AND SYMMETRY. ALL PLANTS SHALL HAVE A NORMAL HABIT OR SOUND, HEALTHY, VIGOROUS PLANTS WITH WELL DEVELOPED ROOT SYSTEM. PLANTS SHALL BE FREE OF DISEASE, INSECT PESTS, EGGS OR LARVAE.
4. PLANTS SHALL NOT BE PRUNED BEFORE DELIVERY. TREES WITH ABRASION OF THE BARK, SUNSCALDS, DISFIGURING KNOTS OR FRESH CUTS OF LIMBS OVER ONE AND ONE-FOURTH INCHES (1-1/4") WHICH HAVE NOT COMPLETELY CALLOUSED SHALL BE REJECTED.
5. ALL PLANTS SHALL BE TYPICAL OF THEIR SPECIES OR VARIETY AND SHALL HAVE A NORMAL HABIT OF GROWTH AND BE LEGIBLY TAGGED WITH THE PROPER NAME AND SIZE.
6. THE ROOT SYSTEM OF EACH PLANT SHALL BE WELL PROVIDED WITH FIBROUS ROOTS. ALL PARTS SHALL BE SOUND, HEALTHY, VIGOROUS, WELL-BRANCHED AND DENSELY FOLIATED WHEN IN LEAF.
7. ALL PLANTS DESIGNATED BALL AND BURLAP (B&B) MUST BE MOVED WITH THE ROOT SYSTEM AS SOLID UNITS WITH BALLS OF EARTH FIRMLY WRAPPED WITH BURLAP. THE DIAMETER AND DEPTH OF THE BALLS OF EARTH MUST BE SUFFICIENT TO ENCOMPASS THE FIBROUS ROOT FEEDING SYSTEMS NECESSARY FOR THE HEALTHY DEVELOPMENT OF THE PLANT. NO PLANT SHALL BE ACCEPTED WHEN THE BALL OF EARTH SURROUNDING ITS ROOTS HAS BEEN BADLY CRACKED OR BROKEN PREPARATORY TO OR DURING THE PROCESS OF PLANTING. THE BALLS SHALL REMAIN INTACT DURING ALL OPERATIONS. ALL PLANTS THAT CANNOT BE PLANTED AT ONCE MUST BE HEELED-IN BY SETTING IN THE GROUND AND COVERING THE BALLS WITH SOIL OR MULCH AND THEN WATERING. HEMP BURLAP AND TWINE IS PREFERABLE TO TREATED. IF TREATED BURLAP IS USED, ALL TWINE IS TO BE CUT FROM AROUND THE TRUNK AND ALL BURLAP IS TO BE REMOVED.
8. PLANTS TRANSPORTED TO THE PROJECT IN OPEN VEHICLES SHALL BE COVERED WITH TARPS OR OTHER SUITABLE COVERS SECURELY FASTENED TO THE BODY OF THE VEHICLE TO PREVENT INJURY TO THE PLANTS. CLOSED VEHICLES SHALL BE ADEQUATELY VENTILATED TO PREVENT OVERHEATING OF THE PLANTS. EVIDENCE OF INADEQUATE PROTECTION FOLLOWING DIGGING, CARELESSNESS WHILE IN TRANSIT, OR IMPROPER HANDLING OR STORAGE SHALL BE CAUSE FOR REJECTION OF PLANT MATERIAL. ALL PLANTS SHALL BE KEPT MOIST, FRESH, AND PROTECTED. SUCH PROTECTION SHALL ENCOMPASS THE ENTIRE PERIOD DURING WHICH THE PLANTS ARE IN TRANSIT, BEING HANDLED, OR ARE IN TEMPORARY STORAGE.
9. ALL PLANT MATERIAL SHALL BE INSTALLED IN ACCORDANCE WITH THE CORRESPONDING LANDSCAPE PLAN AND PLANTING DETAILS.
10. LANDSCAPE CONTRACTOR SHALL MAKE BEST EFFORT TO INSTALL PLANTINGS ON THE SAME DAY AS DELIVERY. IF PLANTS ARE NOT PLANTED IMMEDIATELY ON SITE, PROPER CARE SHALL BE TAKEN TO PLACE THE PLANTINGS IN PARTIAL SHADE WHEN POSSIBLE. THE ROOT BALL SHALL BE KEPT MOIST AT ALL TIMES AND COVERED WITH MOISTENED MULCH OR ALGED WOODCHIPS. PROPER IRRIGATION SHALL BE SUPPLIED SO AS TO NOT ALLOW THE ROOT BALL TO DRY OUT. PLANTINGS SHALL BE UNTIED AND PROPER SPACING SHALL BE ALLOTTED FOR AIR CIRCULATION AND TO PREVENT DISEASE, WILTING, AND LEAF LOSS. PLANTS THAT REMAIN UNPLANTED FOR A PERIOD OF TIME GREATER THAN THREE (3) DAYS SHALL BE HEALED IN WITH TOPSOIL OR MULCH AND WATERED AS REQUIRED TO PRESERVE ROOT MOISTURE.
11. NO PLANT MATERIAL SHALL BE PLANTED IN MUDDY OR FROZEN SOIL.
12. PLANTS WITH INJURED ROOTS OR BRANCHES SHALL BE PRUNED PRIOR TO PLANTING UTILIZING CLEAN, SHARP TOOLS. ONLY DISEASED OR INJURED PLANTS SHALL BE REMOVED.
13. IF ROCK OR OTHER UNDERGROUND OBSTRUCTION IS ENCOUNTERED, THE LANDSCAPE DESIGNER RESERVES THE RIGHT TO RELOCATE OR ENLARGE PLANTING PITS OR DELETE PLANT MATERIAL FROM THE CONTRACT.
14. IF PLANTS ARE PROPOSED WITHIN SIGHT TRIANGLES, TREES SHALL BE LIMBED AND MAINTAINED TO A HEIGHT OF EIGHT FEET (8') ABOVE GRADE, AND SHRUBS, GROUND COVER, PERENNIALS, AND ANNUALS SHALL BE MAINTAINED TO A HEIGHT NOT TO EXCEED TWO FEET (2') ABOVE GRADE UNLESS OTHERWISE NOTED OR SPECIFIED BY THE GOVERNING MUNICIPALITY OR AGENCY.
15. INSTALLATION SHALL OCCUR DURING THE FOLLOWING SEASONS:
    PLANTS (MARCH 15 - DECEMBER 15)
    LAWNS (MARCH 15 - JUNE 15 OR SEPTEMBER 1 - DECEMBER 1)
16. THE FOLLOWING TREES ARE SUSCEPTIBLE TO TRANSPLANT SHOCK AND SHALL NOT BE PLANTED DURING THE FALL SEASON (STARTING SEPTEMBER 15):

ABIES CONCOLOR	CORNUS VARIETIES	OSTRYA VIRGINIANA
ACER BUERGERIANUM	CRATAEGUS VARIETIES	PINUS NIGRA
ACER FREEMANII	CUPRESSOCYPARIS LEYLANDII	PLATANUS VARIETIES
ACER RUBRUM	FAGUS VARIETIES	POPULUS VARIETIES
ACER SACCHARINUM	HALESIA VARIETIES	PRUNUS VARIETIES
BETULA VARIETIES	ILEX X FOSTERII	PYRUS VARIETIES
CARPINUS VARIETIES	ILEX NELLIE STEVENS	QUERCUS VARIETIES (NOT Q. PALUSTRIS)
CEDRUS DEODARA	ILEX OPACA	SALIX WEEPING VARIETIES
CELTIS VARIETIES	JUNIPERUS VIRGINIANA	SORBUS VARIETIES
CERCIDIPHYLLUM VARIETIES	KOELREUTERIA PANICULATA	TAXODIUM VARIETIES
CERCIS CANADENSIS	LIQUIDAMBAR VARIETIES	TAXUX B REPANDENS
CORNUS VARIETIES	LIRIODENDRON VARIETIES	TILIA TOMENTOSA VARIETIES
CRATAEGUS VARIETIES	MALUS IN LEAF	ULMUS PARVIFOLIA VARIETIES
	NYSSA SYLVATICA	ZELKOVA VARIETIES

17. IF A PROPOSED PLANT IS UNATTAINABLE OR ON THE FALL DIGGING HAZARD LIST, AN EQUIVALENT SPECIES OF THE SAME SIZE MAY BE REQUESTED FOR SUBSTITUTION OF THE ORIGINAL PLANT. ALL SUBSTITUTIONS SHALL BE APPROVED BY THE PROJECT LANDSCAPE DESIGNER OR MUNICIPAL OFFICIAL PRIOR TO ORDERING OR INSTALLATION.
18. DURING THE COURSE OF CONSTRUCTION/PLANT INSTALLATION, EXCESS AND WASTE MATERIALS SHALL BE CONTINUOUSLY AND PROMPTLY REMOVED AT THE END OF EACH WORK DAY. ALL DEBRIS, MATERIALS, AND TOOLS SHALL BE PROPERLY STORED, STOCKPILED OR DISPOSED OF AND ALL PAVED AREAS SHALL BE CLEANED.
19. THE LANDSCAPE CONTRACTOR SHALL DISPOSE OF ALL RUBBISH AND EXCESS SOIL AT HIS EXPENSE TO AN OFF-SITE LOCATION AS APPROVED BY THE LOCAL MUNICIPALITY.
20. A 90-DAY MAINTENANCE PERIOD SHALL BEGIN IMMEDIATELY AFTER ALL PLANTS HAVE BEEN SATISFACTORILY INSTALLED.
21. MAINTENANCE SHALL INCLUDE, BUT NOT BE LIMITED TO, REPLACING MULCH THAT HAS BEEN DISPLACED BY EROSION OR OTHER MEANS, REPAIRING AND RESHAPING WATER RINGS OR SAUCERS, MAINTAINING STAKES AND GUYS IF ORIGINALLY REQUIRED, WATERING WHEN NEEDED OR DIRECTED, WEEDING, PRUNING, SPRAYING, FERTILIZING, MOWING THE LAWN, AND PERFORMING ANY OTHER WORK REQUIRED TO KEEP THE PLANTS IN A HEALTHY CONDITION.
22. MOW ALL GRASS AREAS AT REGULAR INTERVALS TO KEEP THE GRASS HEIGHT FROM EXCEEDING THREE INCHES (3"). MOWING SHALL BE PERFORMED ONLY WHEN GRASS IS DRY. MOWER BLADE SHALL BE SET TO REMOVE NO MORE THAN ONE THIRD (1/3) OF THE GRASS LENGTH. WHEN THE AMOUNT OF GRASS IS HEAVY, IT SHALL BE REMOVED TO PREVENT DESTRUCTION OF THE UNDERLYING TURF. MOW GRASS AREAS IN SUCH A MANNER AS TO PREVENT CLIPPINGS FROM BLOWING ON PAVED AREAS, AND SIDEWALKS. CLEANUP AFTER MOWING SHALL INCLUDE SWEEPING OR BLOWING OF PAVED AREAS AND SIDEWALKS TO CLEAR THEM FROM MOWING DEBRIS.
23. GRASSED AREAS DAMAGED DURING THE PROCESS OF THE WORK SHALL BE THE RESPONSIBILITY OF THE CONTRACTOR, WHO SHALL RESTORE THE DISTURBED AREAS TO A CONDITION SATISFACTORY TO THE PROJECT LANDSCAPE DESIGNER, MUNICIPAL OFFICIAL, OR OWNER/OWNER'S REPRESENTATIVE. THIS MAY INCLUDE FILLING TO GRADE, FERTILIZING, SEEDING, AND MULCHING.
24. SHOULD THE OWNER REQUIRE MAINTENANCE BEYOND THE STANDARD 90-DAY MAINTENANCE PERIOD, A SEPARATE CONTRACT SHALL BE ESTABLISHED.
25. LANDSCAPE CONTRACTOR SHALL WATER NEW PLANTINGS FROM TIME OF INSTALL AND THROUGHOUT REQUIRED 90-DAY MAINTENANCE PERIOD UNTIL PLANTS ARE ESTABLISHED. IF ON-SITE WATER IS NOT AVAILABLE AT THE PROJECT LOCATION, THE LANDSCAPE CONTRACTOR SHALL FURNISH IT BY MEANS OR A WATERING TRUCK OR OTHER ACCEPTABLE MANNER.
26. THE QUANTITY OF WATER APPLIED AT ONE TIME SHALL BE SUFFICIENT TO PENETRATE THE SOIL TO A MINIMUM OF EIGHT INCHES (8") IN SHRUB BEDS AND SIX INCHES (6") IN TURF AREAS AT A RATE WHICH WILL PREVENT SATURATION OF THE SOIL.
27. IF AN AUTOMATIC IRRIGATION SYSTEM HAS BEEN INSTALLED, IT CAN BE USED FOR WATERING PLANT MATERIAL. HOWEVER, FAILURE OF THE SYSTEM DOES NOT ELIMINATE THE LANDSCAPE CONTRACTOR'S RESPONSIBILITY OF PLANT HEALTH AND ESTABLISHMENT.

PLANT MATERIAL GUARANTEE NOTES:

1. THE LANDSCAPE CONTRACTOR SHALL GUARANTEE ALL PLANT MATERIAL FOR A PERIOD OF ONE YEAR (1 YR.) FROM APPROVAL OF LANDSCAPE INSTALLATION BY THE PROJECT LANDSCAPE DESIGNER, MUNICIPAL OFFICIAL, OR OWNER/OWNER'S REPRESENTATIVE.
2. THE LANDSCAPE CONTRACTOR SHALL REMOVE AND REPLACE DYING, DEAD, OR DEFECTIVE PLANT MATERIAL AT HIS EXPENSE. THE LANDSCAPE CONTRACTOR SHALL ALSO BE RESPONSIBLE FOR ANY DAMAGES CAUSED BY HIS COMPANY'S OPERATIONS.
3. ALL REPLACEMENT PLANTS SHALL BE OF THE SAME SPECIES AND SIZE

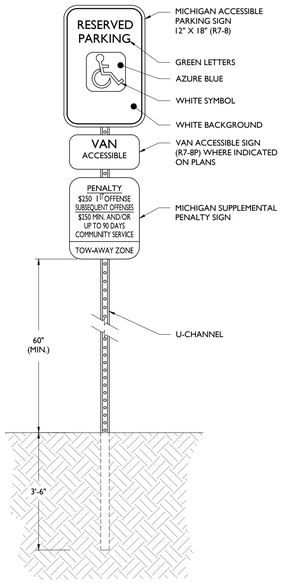

ACCESSIBLE PARKING SIGN DETAIL

NOT TO SCALE

1

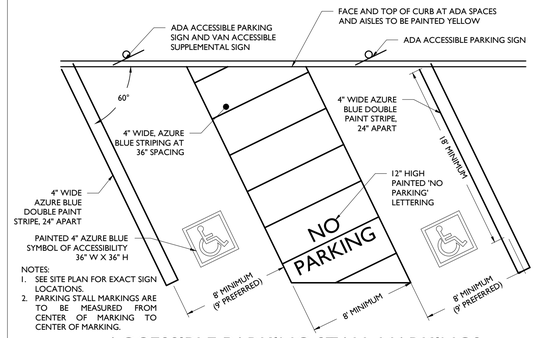

NOTES:
1. SEE SITE PLAN FOR EXACT SIGN LOCATIONS.
2. PARKING STALL MARKINGS ARE TO BE MEASURED FROM CENTER OF MARKING TO CENTER OF MARKING.

ACCESSIBLE PARKING STALL MARKINGS

NOT TO SCALE

2

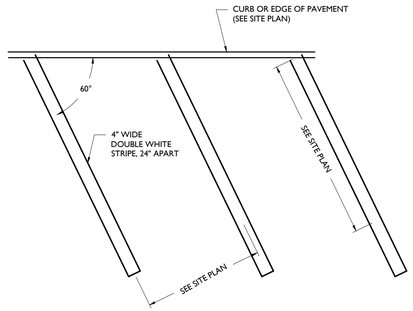

ANGLED PARKING STALL MARKINGS

NOT TO SCALE

3

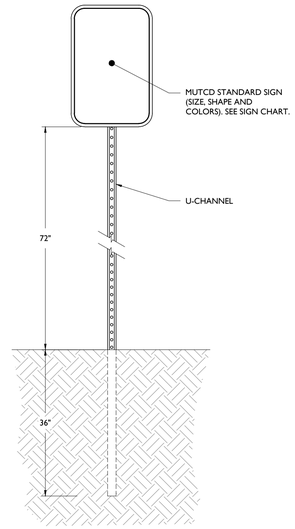

SIGN POST DETAIL

NOT TO SCALE

4

M.U.T.C.D. NUMBER	TEXT	COLOR		SIZE OF SIGN (WIDTH X HEIGHT)	TYPE OF MOUNT
		LEGEND	BACKGROUND		
STOP SIGN (R1-1)	STOP	WHITE	RED	36"x36"	GROUND
DO NOT ENTER (R5-1)	DO NOT ENTER	RED	WHITE	30"x30"	GROUND

NOTE:
1. ALL SIGNS SHALL BE IN ACCORDANCE WITH THE FEDERAL HIGHWAY ADMINISTRATION (FHWA) MANUAL ON UNIFORM TRAFFIC CONTROL DEVICES (MUTCD), EXCEPT AS NOTED.
2. ALL SIGNS SHALL BE MOUNTED AS TO NOT OBSTRUCT THE SHAPE OF "STOP" (R1-1) AND "YIELD" (R1-2) SIGNS.

SIGN DATA TABLE

NOT TO SCALE

5

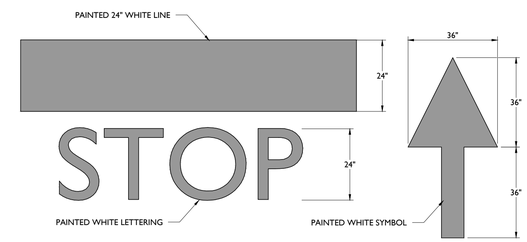

STOP BAR & ARROW DETAILS

NOT TO SCALE

6

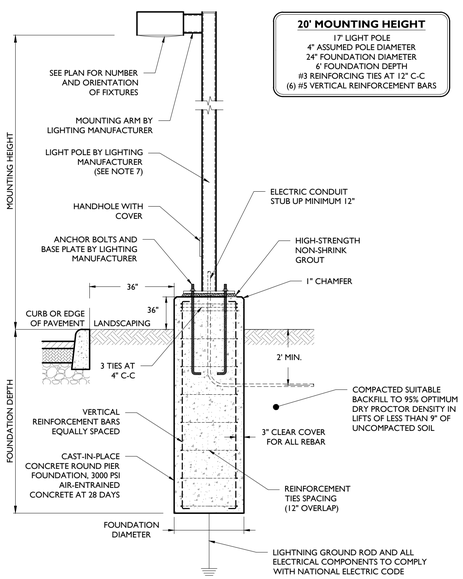

LIGHT POLE INSTALLATION DETAIL

NOT TO SCALE

NOTES:
1. MINIMUM SOIL BEARING PRESSURE OF 1500 PSF, SOIL FRICTION ANGLE OF 30 DEGREES, AND SOIL DRY UNIT WEIGHT OF 120 PCF SHALL BE CONFIRMED IN THE FIELD BY A QUALIFIED PROFESSIONAL.
2. CAST-IN-PLACE CONCRETE SHALL BE CONSOLIDATED USING VIBRATOR.
3. ALL REBAR TO BE NEW GRADE 60 STEEL.
4. PRE-CAST PIERS ACCEPTABLE UPON WRITTEN APPROVAL OF SHOP DRAWING BY ENGINEER.
5. CONCRETE TO BE INSTALLED A MINIMUM OF 7 DAYS PRIOR TO INSTALLING LIGHT POLE. POURED CONCRETE MIX REQUIRED TO OBTAIN 80% OF DESIGN STRENGTH PRIOR TO INSTALLING LIGHT POLE.
6. CONCRETE SHALL HAVE A MAXIMUM SLUMP OF 4" (WITHIN 1" TOLERANCE).
7. POLE SHALL BE RATED FOR 10 MPH HIGHER THAN MAXIMUM WIND SPEED 33FT ABOVE GROUND FOR THE AREA BASED ON ANSI/ASCE 7-93.
8. POUR TO BE TERMINATED AT A FORM.
9. WORK SHALL CONFORM TO ACI BEST PRACTICES FOR APPROPRIATE TEMPERATURE AND WEATHER CONDITIONS.
10. CONTRACTOR TO TEMPORARILY SUPPORT ADJACENT SOIL AND STRUCTURES DURING EXCAVATION IF REQUIRED.

7

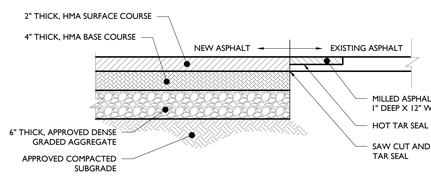

FULL DEPTH ASPHALT PAVEMENT DETAIL

NOT TO SCALE

NOTE:
HMA MIX AND DENSE GRADED AGGREGATE SHALL CONFORM TO STATE DEPARTMENT OF TRANSPORTATION SPECIFICATIONS.

8

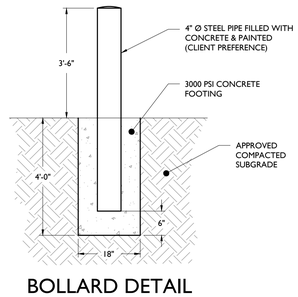

BOLLARD DETAIL

NOT TO SCALE

9

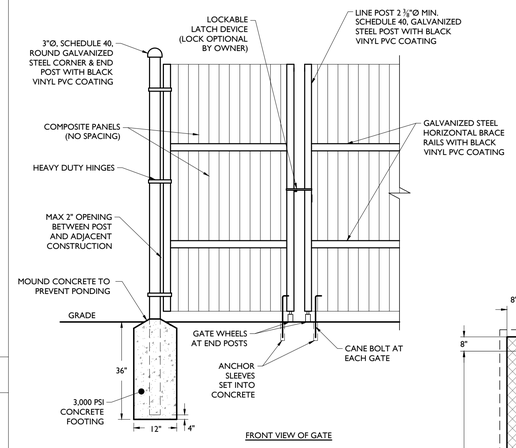

FRONT VIEW OF GATE

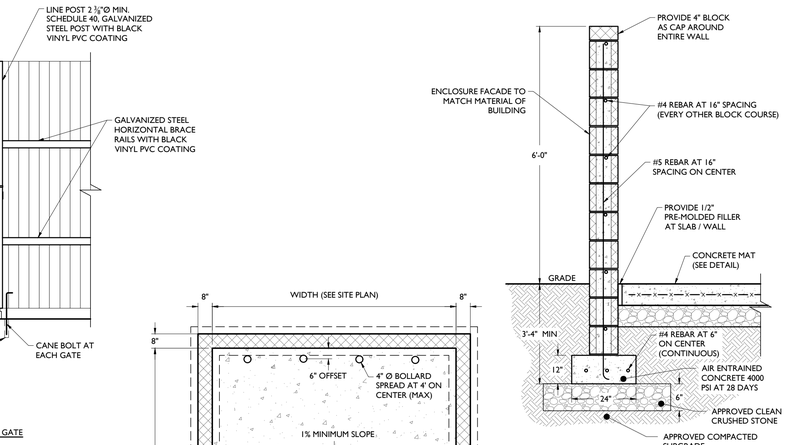

SECTION VIEW OF WALL

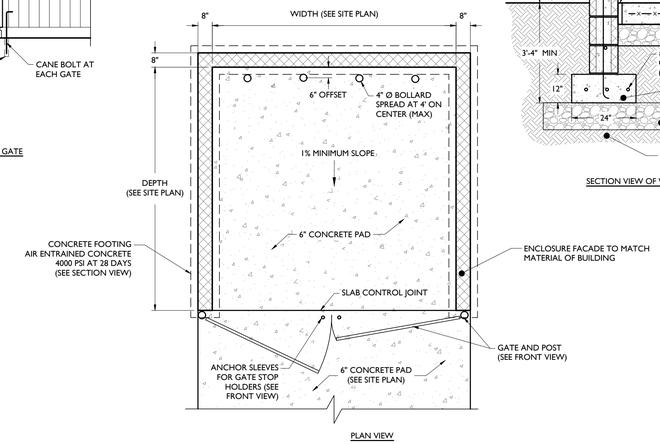

PLAN VIEW

NOTE:
BLOCK COLOR TO MATCH BUILDING OR AS SPECIFIED BY OWNER

TRASH / RECYCLE ENCLOSURE DETAIL

NOT TO SCALE

10

ISSUE	DATE	BY	DESCRIPTION
3	04/16/2025	JDKG	RESUBMISSION FOR SITE PLAN APPROVAL
2	04/09/2025	JDKG	UPDATE FOR DTE COORDINATION
1	03/14/2025	JDKG	FOR SITE PLAN APPROVAL

NOT APPROVED FOR CONSTRUCTION

STONEFIELD engineering & design
Birmingham, MI · New York, NY · Salem, MA
Princeton, NJ · Tampa, FL · Rutherford, NJ
www.stonefieldeng.com
555 S. Old Woodward Avenue, Suite 12L, Birmingham, MI 48009
Phone 248.247.1115

SITE DEVELOPMENT PLANS

JOHNNY'S EXPRESS CAR WASH

PROPOSED AUTO WASH

PARCEL ID: 137-99-0004-001 & PART OF 137-99-0004-002
30207 PLYMOUTH ROAD
CITY OF LIVONIA
WAYNE COUNTY, MICHIGAN

STATE OF MICHIGAN
JONATHAN REID GOOKSEY
ENGINEER
LICENSED PROFESSIONAL ENGINEER
MICHIGAN LICENSE NO. 6201041708
LICENSED PROFESSIONAL ENGINEER

STONEFIELD engineering & design

SCALE: AS SHOWN | PROJECT ID: DET-240419

TITLE: CONSTRUCTION DETAILS

DRAWING: C-10

V:\DET\2024\DET-240419 PILLAR CONSTRUCTION - 30207 PLYMOUTH ROAD, LIVONIA, MI\CADD\PLOT\DDP-10-11-12-DETL.DWG

FIELD VERIFY ALL DIMENSIONS

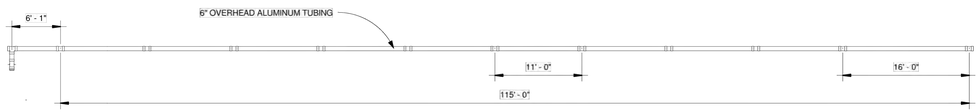

1 PIPE LAYOUT
1/8" = 1'-0"

NOTES

THESE DRAWINGS ARE THE PROPERTY OF VACUTECH, IT IS A PRELIMINARY DRAWING AND IS NOT TO BE USED FOR CONSTRUCTION OR INSTALLATION WITHOUT THE WRITTEN CONSENT OF VACUTECH. NO OTHER PERSON, AGENCY, DEALER, AFFILIATED WITH OR NOT AFFILIATED WITH VACUTECH IS AUTHORIZED TO PROVIDE WRITTEN CONSENT.

VACUTECH
1350 HI-TECH DRIVE, SHERIDAN WY, 82801
PHONE : (307) 675-1982
EMAIL: info@vacutechllc
WEB SITE: vacutechllc.com

ECO EXPRESS

ANNAPOLIS, MARYLAND

No.	Revision	By	Date

PIPE LAYOUT

Project number	CW15-330	V5
Date	11/5/15	
Drawn by	TD	
Checked by	SS	Scale 1/8" = 1'-0"

1

FIELD VERIFY ALL DIMENSIONS

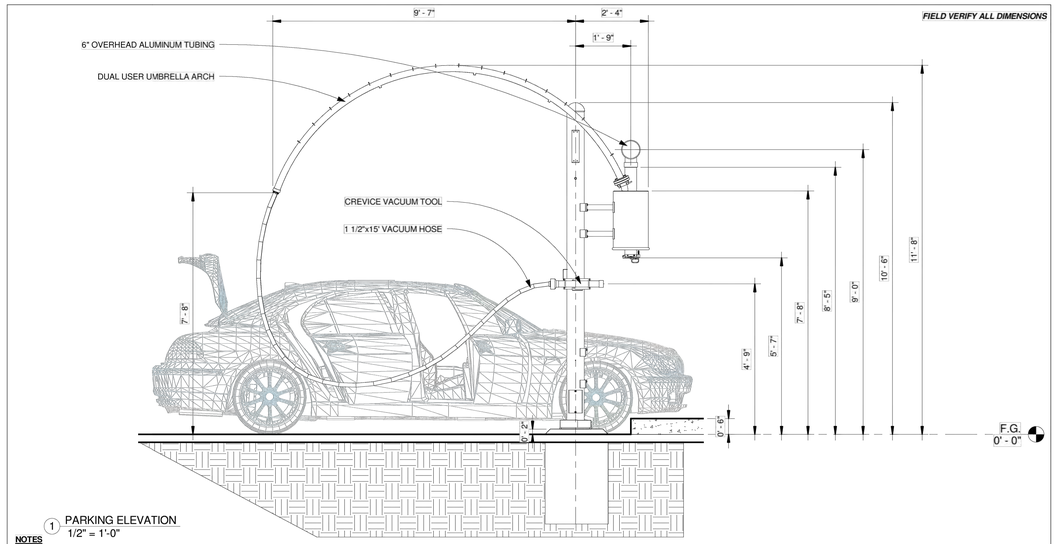

1 PARKING ELEVATION
1/2" = 1'-0"

NOTES

THESE DRAWINGS ARE THE PROPERTY OF VACUTECH, IT IS A PRELIMINARY DRAWING AND IS NOT TO BE USED FOR CONSTRUCTION OR INSTALLATION WITHOUT THE WRITTEN CONSENT OF VACUTECH. NO OTHER PERSON, AGENCY, DEALER, AFFILIATED WITH OR NOT AFFILIATED WITH VACUTECH IS AUTHORIZED TO PROVIDE WRITTEN CONSENT.

VACUTECH
1350 HI-TECH DRIVE, SHERIDAN WY, 82801
PHONE : (307) 675-1982
EMAIL: info@vacutechllc
WEB SITE: vacutechllc.com

ECO EXPRESS

ANNAPOLIS, MARYLAND

No.	Revision	By	Date

PARKING ELEVATION

Project number	CW15-330	V7
Date	11/5/15	
Drawn by	TD	
Checked by	SS	Scale 1/2" = 1'-0"

2

BASEPLATE ORIENTATION

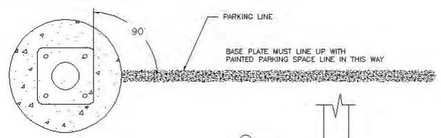

BASE PLATE BOLT PATTERN

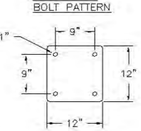

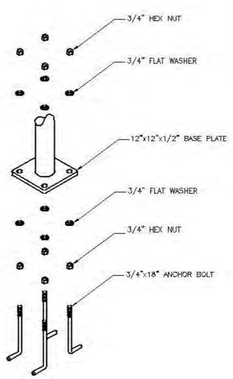

C1 STUB-UP HEIGHTS ARE BASED ON FOOTING HEIGHT

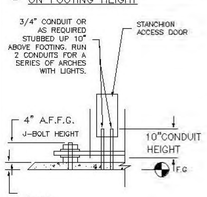

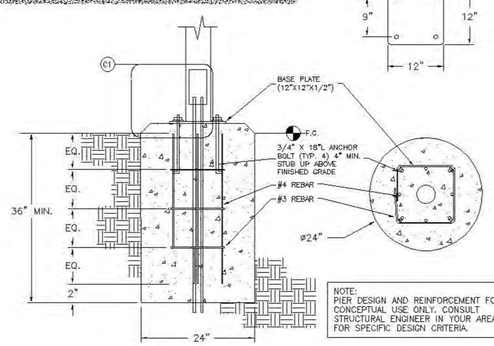

NOTE:
PIER DESIGN AND REINFORCEMENT FOR CONCEPTUAL USE ONLY. CONSULT STRUCTURAL ENGINEER IN YOUR AREA FOR SPECIFIC DESIGN CRITERIA.

UMBRELLA ARCH FOOTING

NOTES

THESE DRAWINGS ARE THE PROPERTY OF VACUTECH, IT IS A PRELIMINARY DRAWING AND IS NOT TO BE USED FOR CONSTRUCTION OR INSTALLATION WITHOUT THE WRITTEN CONSENT OF VACUTECH. NO OTHER PERSON, AGENCY, DEALER, AFFILIATED WITH OR NOT AFFILIATED WITH VACUTECH IS AUTHORIZED TO PROVIDE WRITTEN CONSENT.

VACUTECH
1350 HI-TECH DRIVE, SHERIDAN WY, 82801
PHONE : (307) 675-1982
EMAIL: info@vacutechllc
WEB SITE: vacutechllc.com

ECO EXPRESS

ANNAPOLIS, MARYLAND

No.	Revision	By	Date

FOOTING DETAIL

Project number	CW15-330	V9
Date	11/5/15	
Drawn by	TD	
Checked by	SS	Scale

3

FIELD VERIFY ALL DIMENSIONS

NOTE: IF VACUUM EQUIPMENT IS ENCLOSED WITH ROOF/CEILING, REFER TO VENTILATION REQUIREMENTS UNDER EQUIPMENT WARRANTY INFORMATION

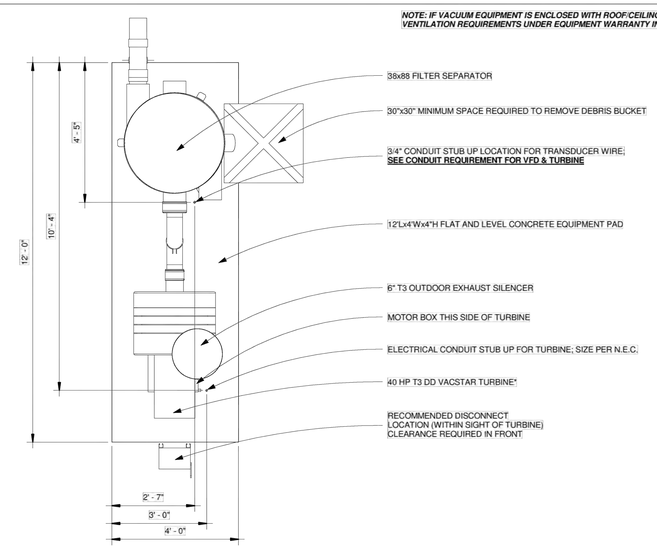

1 EQUIPMENT DETAIL
1/2" = 1'-0"

NOTES

THESE DRAWINGS ARE THE PROPERTY OF VACUTECH, IT IS A PRELIMINARY DRAWING AND IS NOT TO BE USED FOR CONSTRUCTION OR INSTALLATION WITHOUT THE WRITTEN CONSENT OF VACUTECH. NO OTHER PERSON, AGENCY, DEALER, AFFILIATED WITH OR NOT AFFILIATED WITH VACUTECH IS AUTHORIZED TO PROVIDE WRITTEN CONSENT.

VACUTECH
1350 HI-TECH DRIVE, SHERIDAN WY, 82801
PHONE : (307) 675-1982
EMAIL: info@vacutechllc
WEB SITE: vacutechllc.com

ECO EXPRESS

ANNAPOLIS, MARYLAND

No.	Revision	By	Date

EQUIPMENT DETAIL

Project number	CW15-330	V10
Date	11/5/15	
Drawn by	TD	
Checked by	SS	Scale 1/2" = 1'-0"

4

ISSUE	DATE	BY	DESCRIPTION
3	04/16/2025	JD/KG	RESUBMISSION FOR SITE PLAN APPROVAL
2	04/09/2025	JD/KG	UPDATE FOR DTE COORDINATION
1	03/14/2025	JD/KG	FOR SITE PLAN APPROVAL

NOT APPROVED FOR CONSTRUCTION

STONEFIELD engineering & design
Birmingham, MI · New York, NY · Salem, MA
Princeton, NJ · Tampa, FL · Rutherford, NJ
www.stonefieldeng.com
555 S. Old Woodward Avenue, Suite 12L, Birmingham, MI 48009
Phone 248.247.1115

SITE DEVELOPMENT PLANS

JOHNNY'S EXPRESS CAR WASH

PROPOSED AUTO WASH

PARCEL ID: 137-99-0004-001 & PART OF 137-99-0004-002
30207 PLYMOUTH ROAD
CITY OF LIVONIA
WAYNE COUNTY, MICHIGAN

STONEFIELD engineering & design

SCALE: AS SHOWN | PROJECT ID: DET-240419

TITLE: CONSTRUCTION DETAILS

DRAWING: C-11

V:\DET\2024\DET-240419 PILLAR CONSTRUCTION - 30207 PLYMOUTH ROAD, LIVONIA, MI\CADD\PLOTTER\DP-9-11-13-DETL.DWG

Triple Lane Layout Detail

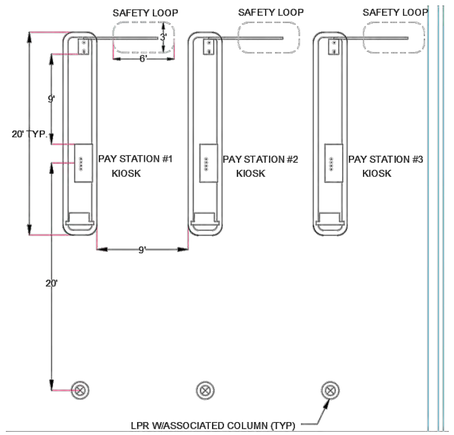

Vehicle Loop Sensor Layout

1

V:\DET\2024\DET-240419 PILLAR CONSTRUCTION - 30307 PLYMOUTH ROAD, LIVONIA, MI\CADD\PLOT\DP-SI-11-12-DETL.DWG

ISSUE	DATE	BY	DESCRIPTION
3	04/16/2025	JD/KG	RESUBMISSION FOR SITE PLAN APPROVAL
2	04/09/2025	JD/KG	UPDATE FOR DTE COORDINATION
1	03/14/2025	JD/KG	FOR SITE PLAN APPROVAL

NOT APPROVED FOR CONSTRUCTION

STONEFIELD engineering & design
Birmingham, MI · New York, NY · Salem, MA
Princeton, NJ · Tampa, FL · Rutherford, NJ
www.stonefieldeng.com
555 S. Old Woodward Avenue, Suite 12L, Birmingham, MI 48009
Phone 248.247.1115

SITE DEVELOPMENT PLANS

JOHNNY'S EXPRESS CAR WASH

PROPOSED AUTO WASH

PARCEL ID: 137-99-0004-001 & PART OF 137-99-0004-002
30307 PLYMOUTH ROAD
CITY OF LIVONIA
WAYNE COUNTY, MICHIGAN

STONEFIELD engineering & design

SCALE: AS SHOWN | PROJECT ID: DET-240419

TITLE:

CONSTRUCTION DETAILS

DRAWING:

C-12

OVERALL PARCEL
AS DESCRIBED IN FIRST AMERICAN TITLE INSURANCE COMPANY
ISSUING OFFICE FILE NUMBER TC13-115981,
COMMITMENT DATE SEPTEMBER 27, 2024

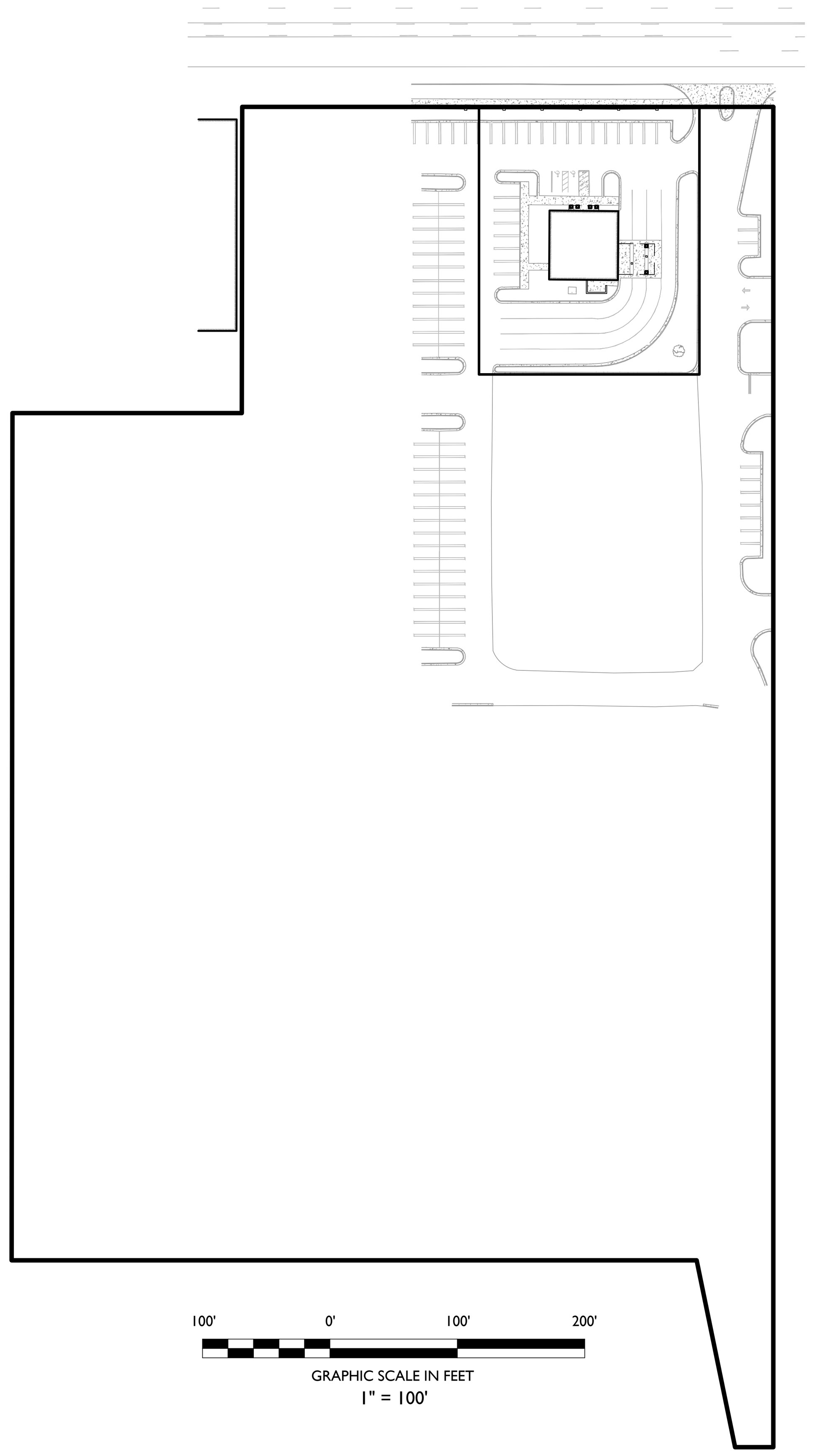

SURVEY NOTES:

1. THE ADDRESS FOR THIS PROPERTY IS 30207 PLYMOUTH ROAD, LIVONIA, MICHIGAN 48150-2128 (FROM RECORD DOCUMENTS).
2. THIS SURVEY AND THE BOUNDARIES SHOWN HEREON ARE THE RESULT OF AN ACTUAL FIELD SURVEY PERFORMED ON DECEMBER 18, 2024 BASED ON AVAILABLE MAPS AND DEEDS OF RECORD, AND PHYSICAL EVIDENCE. THIS SURVEY WAS PERFORMED ON PARCEL 137-99-004-001 AND PART OF 137-99-004-002. THE PARCEL DESCRIBED IN THE TITLE COMMITMENT IS THE PARENT PARCEL OF THESE PARCELS PRIOR TO A LAND DIVISION PERFORMED IN 2009 (PER THE CITY OF LIVONIA).
3. THE SURVEYOR IS NOT QUALIFIED TO IDENTIFY ENVIRONMENTAL CONDITIONS OR THE PRESENCE OR ABSENCE OF WETLANDS.
4. THIS SURVEY IS VALID ONLY WHEN A DIGITAL OR EMBOSSED SEAL IS AFFIXED HERETO.
5. THE CERTIFICATION SHOWN HEREON IS NOT TRANSFERABLE TO ADDITIONAL INSTITUTIONS OR SUBSEQUENT OWNERS.
6. ANY SUBSURFACE UTILITIES SHOWN HAVE BEEN LOCATED FROM MARKOUTS OBSERVED ON SITE DURING THE FIELD SURVEY, AND SURFACE FEATURES SUCH AS VALVES, MANHOLES AND GRATES. STORM DRAINAGE AND OR SANITARY INVERTS ARE DEPICTED BASED ON OBSERVATIONS MADE IN THE FIELD. THE SURVEYOR MAKES NO GUARANTEES THAT THE UNDERGROUND UTILITIES SHOWN COMPRISE ALL SUCH UTILITIES IN THE AREA, EITHER IN SERVICE OR ABANDONED. THE SURVEYOR FURTHER DOES NOT WARRANT THAT THE UNDERGROUND UTILITIES SHOWN ARE IN THE EXACT LOCATION INDICATED, ALTHOUGH THEY ARE LOCATED AS ACCURATELY AS POSSIBLE FROM INFORMATION USED. THE SURVEY HAS NOT PHYSICALLY LOCATED THE UTILITIES. BEFORE ANY EXCAVATIONS ARE BEGUN, THE PROPER UTILITY AGENCIES MUST BE CONTACTED FOR VERIFICATION OF UTILITY TYPE AND FOR FIELD LOCATIONS.
7. BEARINGS ARE REFERENCED TO THE MICHIGAN STATE PLANE COORDINATE SYSTEM (NAD83) SOUTH ZONE. ELEVATIONS SHOWN HEREON ARE REFERENCED TO THE NORTH AMERICAN VERTICAL DATUM OF 1988 (NAVD 88), ESTABLISHED VIA RTK GPS OBSERVATIONS UTILIZING MICHIGAN DEPARTMENT OF TRANSPORTATION CONTINUOUSLY OPERATING REFERENCE SYSTEM (MDOT CORS).
8. THE PROPERTY CURRENTLY HAS ACCESS TO PLYMOUTH ROAD.
9. BASEMENT OR BELOW GRADE STRUCTURES (IF ANY) UNKNOWN.
10. BENCHMARK = MAG NAIL = 636.37 (NAVD88).
    - IN CONCRETE ISLAND AT ENTRANCE TO PLYMOUTH ROAD
    BENCHMARK = MAG NAIL = 638.33 (NAVD88).
    - IN PAVEMENT AT SOUTHWEST CORNER OF PARCEL 137-99-004-001

FLOOD NOTE:

BY GRAPHIC PLOTTING ONLY, THIS PROPERTY IS IN ZONE X (UNSHADED)(AREA DETERMINED TO BE OUTSIDE THE 0.2% ANNUAL CHANCE FLOODPLAIN) OF THE FLOOD INSURANCE RATE MAP, COMMUNITY NO. 260233 (PANEL 227E), MAP NUMBER: 26163C0227E WHICH BEARS AN EFFECTIVE DATE OF FEBRUARY 12, 2012.

PARCEL DESCRIPTION (OVERALL PARCEL):

LAND SITUATED IN THE CITY OF LIVONIA, COUNTY OF WAYNE, STATE OF MICHIGAN, DESCRIBED AS FOLLOWS:

PART OF THE NORTH 1/2 OF THE NORTHEAST 1/4 OF SECTION 35, TOWN 1 SOUTH, RANGE 9 EAST, CITY OF LIVONIA, WAYNE COUNTY, MICHIGAN, DESCRIBED AS: BEGINNING AT A POINT DISTANT NORTH 89 DEGREES 49 MINUTES 46 SECONDS WEST, 2,010.15 FEET ALONG THE NORTH LINE OF SAID SECTION 35 AND SOUTH 00 DEGREES 10 MINUTES 14 SECONDS WEST, 60.00 FEET FROM THE NORTHEAST CORNER OF SAID SECTION 35; THENCE SOUTH 00 DEGREES 10 MINUTES 14 SECONDS WEST, 1,051.85 FEET; THENCE NORTH 89 DEGREES 51 MINUTES 00 SECONDS WEST, 30.00 FEET; THENCE NORTH 11 DEGREES 24 MINUTES 45 SECONDS WEST, 149.72 FEET; THENCE NORTH 89 DEGREES 49 MINUTES 46 SECONDS WEST, 537.75 FEET; THENCE NORTH 00 DEGREES 14 MINUTES 03 SECONDS EAST, 665.00 FEET; THENCE SOUTH 89 DEGREES 49 MINUTES 46 SECONDS EAST, 180.00 FEET; THENCE NORTH 00 DEGREES 14 MINUTES 03 SECONDS EAST, 240.18 FEET (CALCULATED) 240.00 FEET (RECORDED); THENCE SOUTH 89 DEGREES 49 MINUTES 46 SECONDS EAST, 416.81 FEET (CALCULATED) 416.75 FEET (RECORDED) TO THE POINT OF BEGINNING.

BEING THE SAME PROPERTY AS DESCRIBED IN A TITLE COMMITMENT PREPARED BY FIRST AMERICAN TITLE INSURANCE COMPANY, ISSUING OFFICE FILE NUMBER TC13-115981, COMMITMENT DATE SEPTEMBER 27, 2024.

PARCEL DESCRIPTON:
PARCEL 137-99-004-001 (FROM CITY OF LIVONIA TAX RECORDS)

PART OF THE NORTH 1/2 OF THE NORTHEAST 1/4 OF SECTION 35, TOWN 1 SOUTH, RANGE 9 EAST, DESCRIBED AS: COMMENCING AT THE NORTHEAST CORNER OF SECTION 35; THENCE NORTH 89 DEGREES 49 MINUTES 46 SECONDS WEST 2010.15 FEET; THENCE SOUTH 00 DEGREES 10 MINUTES 14 SECONDS WEST 60.00 FEET; THENCE NORTH 89 DEGREES 49 MINUTES 46 SECONDS WEST 58.01 FEET TO THE POINT OF BEGINNING; THENCE SOUTH 00 DEGREES 10 MINUTES 14 SECONDS WEST 210.00 FEET; THENCE NORTH 89 DEGREES 49 MINUTES 46 SECONDS WEST 173.00 FEET; THENCE NORTH 00 DEGREES 10 MINUTES 14 SECONDS EAST 210.00 FEET; THENCE SOUTH 89 DEGREES 49 MINUTES 46 SECONDS EAST 173.00 FEET TO THE POINT OF BEGINNING. CONTAINING 0.834 ACRES, MORE OR LESS.

SCHEDULE B - PART II EXCEPTIONS:
FIRST AMERICAN TITLE INSURANCE COMPANY, ISSUING OFFICE FILE NUMBER TC13-115981, COMMITMENT DATE SEPTEMBER 27, 2024

ITEMS 1 THROUGH 19, 26, 28, AND 31 ARE NOT SURVEY RELATED.

20. TERMS, CONDITIONS AND PROVISIONS CONTAINED IN EASEMENT RECORDED IN LIBER 14112, PAGE 576. **(NOT SHOWN)**
21. TERMS, CONDITIONS AND PROVISIONS CONTAINED IN EASEMENT RECORDED IN LIBER 14112, PAGE 581. **(PART OF STORM SEWER EASEMENT SHOWN AT SOUTH END OF SURVEY AREA)**
22. TERMS, CONDITIONS AND PROVISIONS CONTAINED IN RELEASE OF RIGHT-OF-WAY FOR DRAIN RECORDED IN LIBER 14186, PAGE 497. **(SHOWN)**
23. TERMS, CONDITIONS, PROVISIONS AND RESTRICTIONS CONTAINED IN WARRANTY DEED RECORDED IN LIBER 16839, PAGE 70. **(EXCEPTION 22 IS REFERENCED IN THIS DOCUMENT; SHOWN AND LABELED AS EXCEPTION 22)**
24. TERMS, CONDITIONS AND PROVISIONS CONTAINED IN GRANT OF EASEMENT IN FAVOR OF THE DETROIT EDISON COMPANY RECORDED IN LIBER 22458, PAGE 91. **(NOT SHOWN)**
25. TERMS, CONDITIONS AND PROVISIONS CONTAINED IN EASEMENT AGREEMENT RECORDED IN LIBER 23507, PAGE 725. **(NOT SHOWN)**
27. EASEMENT IN FAVOR OF PLYMOUTH ROAD DEVELOPMENT AUTHORITY, AND THE TERMS, CONDITIONS AND PROVISIONS CONTAINED THEREIN, RECORDED IN LIBER 35211, PAGE 153. **(SHOWN)**
29. TERMS, CONDITIONS AND PROVISIONS CONTAINED IN DECLARATION OF COVENANTS, CONDITIONS, RESTRICTIONS AND EASEMENT RECORDED IN LIBER 46878, PAGE 103. **(SHOWN)**
30. DETROIT EDISON UNDERGROUND EASEMENT (RIGHT OF WAY) IN FAVOR OF THE DETROIT EDISON COMPANY, AND THE TERMS, CONDITIONS AND PROVISIONS CONTAINED THEREIN, RECORDED IN LIBER 48070, PAGE 708. **(SHOWN)**

AREA NOTES	EXISTING STRIPED PARKING PARCEL 137-99-004-001
PARCEL DESCRIBED IN TITLE COMMITMENT 504045 SQUARE FEET± OR 11.57 ACRES±	REGULAR = 25 SPACES HANDICAP = 2 SPACES
PARCEL 137-99-004-002 36330 SQUARE FEET± OR 0.834 ACRES±	TOTAL = 27 SPACES

SYMBOL	DESCRIPTION	SYMBOL	DESCRIPTION
	BUILDING	—100—	MAJOR CONTOUR
	CONCRETE SIDEWALK / MAT	—101—	MINOR CONTOUR
	ASPHALT / CONCRETE CURB	× 100.00	GRADE SPOT SHOT
D.C	DEPRESSED CURB	× TC 100.50	TOP OF CURB SHOT
	PROPERTY LINE	× BC 100.00	BOTTOM OF CURB SHOT
	VACATED / INTERIOR LOT LINE	× BW 100.00	BOTTOM OF WALL SHOT
	ADJACENT PROPERTY LINE	D.W.S.	DETECTABLE WARNING STRIP
	SECTION LINE		HANDICAP PARKING
	RIGHT OF WAY LINE		WALL
	CENTERLINE		PAVEMENT STRIPING
	EASEMENT	A/C	AIR CONDITIONING UNIT
	IRON ROD FENCE		SECTION CORNER
	FLAG POLE		BENCH MARK
	LIGHT POLE	8"	DECIDUOUS TREE - DIAMETER NOTED
	LIGHT FIXTURE	B.O.S.	BOTTOM OF STRUCTURE
	SIGNS	GRT	GRATE
	DRAIN	ELEV	ELEVATION
	INLET	TYP.	TYPICAL
	MAN HOLE	CONC	CONCRETE
	BOLLARDS	DS	DOOR SILL
	BOX (ELEC, GAS, ETC.)	L/S	LANDSCAPING
E.P.	EDGE OF PAVEMENT	MH	MANHOLE
G	UNDERGROUND GAS LINE	(M)	MEASURED
W	UNDERGROUND WATER LINE	(D)	DEED
E	UNDERGROUND ELEC LINE	P.O.B.	POINT OF BEGINNING
	SANITARY SEWER LINE		
	STORM PIPE		

SURVEY REFERENCES:

1. "ALTA/NSPS LAND TITLE SURVEY" PREPARED FOR SCHOSTAK BROTHERS & COMPANY, TITLED "WONDERLAND MALL", BY HUBBELL, ROTH & CLARK, INC., JOB NO. 20190258, DATED JUNE, 2019.
2. CITY OF LIVONIA GIS UTILITY MAP PROVIDED FROM MISS DIG DESIGN TICKET REQUEST 2024112500868.
3. PLANS PREPARED FOR SCHOSTAK BROTHERS & COMPANY, TITLED "REDEVELOPMENT OF K-MART PARCEL", BY HUBBELL, ROTH & CLARK, INC., JOB NO. 20061020, DATED AUGUST, 2007.

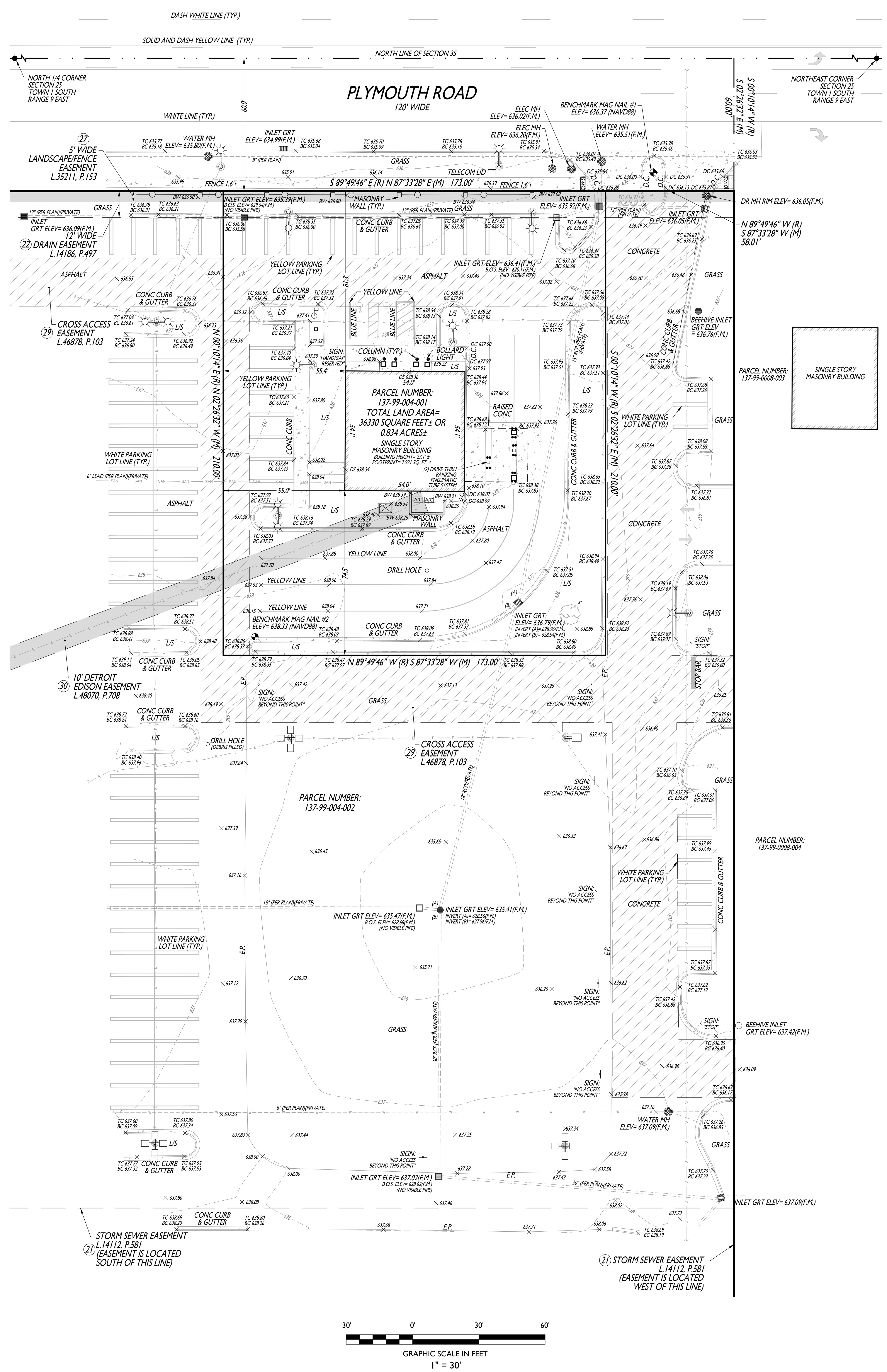

SOURCE: GOOGLE MAPS

VICINITY MAP
NOT TO SCALE

Know what's **below**
Call before you dig.

STONEFIELD
engineering & design

Rutherford, NJ · New York, NY · Boston, MA
Princeton, NJ · Tampa, FL · Detroit, MI
www.stonefieldeng.com

555 S. Old Woodward Avenue, Suite 12L, Birmingham, MI 48009
Phone 248.247.1115

ALTA / NSPS LAND TITLE SURVEY

MAP OF SURVEY OF:

PART OF THE NORTHEAST 1/4 ,SECTION 25, TOWN 1 SOUTH, RANGE 9 EAST
PARCEL NUMBER: 137-99-0004-001 AND PART OF 137-99-0004-002
30207 PLYMOUTH ROAD
CITY OF LIVONIA
WAYNE COUNTY, MICHIGAN

ISSUE	DATE	DRAFT BY	CHECK BY	FIELD DATE	FIELD CREW	DESCRIPTION
1	01/10/25	MVZ/DJS	AG	12/18/24	JN	FOR ISSUE

THIS IS TO DECLARE THAT THIS MAP OR PLAT AND THE SURVEY ON WHICH IT IS BASED WERE MADE IN ACCORDANCE WITH THE 2021 MINIMUM STANDARD DETAIL REQUIREMENTS FOR ALTA/NSPS LAND TITLE SURVEYS, JOINTLY ESTABLISHED AND ADOPTED BY ALTA AND NSPS, AND INCLUDES ITEMS 2, 3, 4, 5, 7(a), 7(b)(1), 8, 9 & 13 OF TABLE A THEREOF.

THE FIELDWORK WAS COMPLETED ON DECEMBER 18, 2024

ROBERT E. HORNYAK, PS
MICHIGAN PROFESSIONAL SURVEYOR No. 4001044286

SCALE: 1"= AS SHOWN	PROJECT ID: DET-240419	SHEET: 1 OF 1

Z:\RUTHERFORD\RUT\WORKING\SURVEY\MICHIGAN\DET\2024\DET-240419 PILLAR CONSTRUCTION - 30207 PLYMOUTH ROAD, LIVONIA, MI_SURVEYING\CADD\DET-240419 - V1.DWG

WALL LEGEND				
SYMBOL	DESCRIPTION	ASSEMBLY	DETAIL SCALE: 1/2"=1'-0"	REMARKS
P1	PROPOSED INTERIOR WALL	5/8" G.W.B. 2"x4" WOOD STUDS @ 16" O.C. W/ 3" SOUND INSULATION 5/8" G.W.B.		
P2	PROPOSED BATHROOM WALL	8" CMU 2"x4" WOOD STUDS @ 16" O.C. 5/8" G.W.B.		
P3	PROPOSED INTERIOR WALL	8" CMU		
P4	PROPOSED INTERIOR WALL	5/8" G.W.B. 2"x4" WOOD STUDS @ 16" O.C. 5/8" G.W.B.		

PARTITION CONDITION CODE

PARTITION TYPE SYMBOL

P1 — PARTITION TYPE - SEE WALL LEGEND
A | 1 — FIRE RESISTANCE RATING (IN HOURS)
PARTITION CONDITION CODE - SEE ABOVE

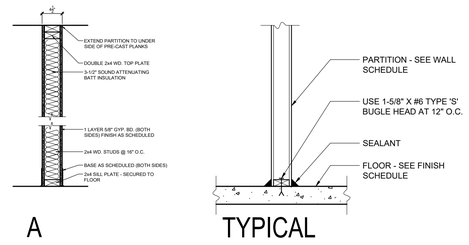

2 PARTITION CONDITION DETAILS

SCALE: 3/4" = 1'-0"

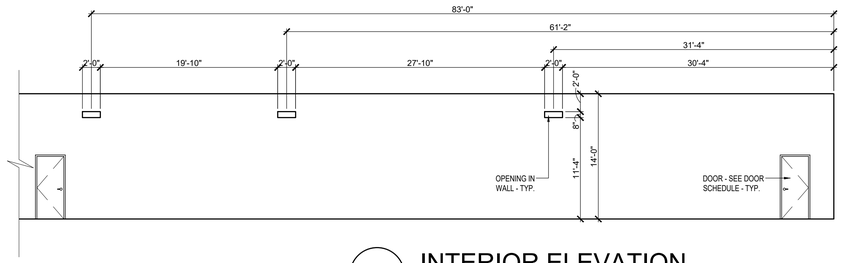

3 INTERIOR ELEVATION

SCALE: 1/8" = 1'-0"

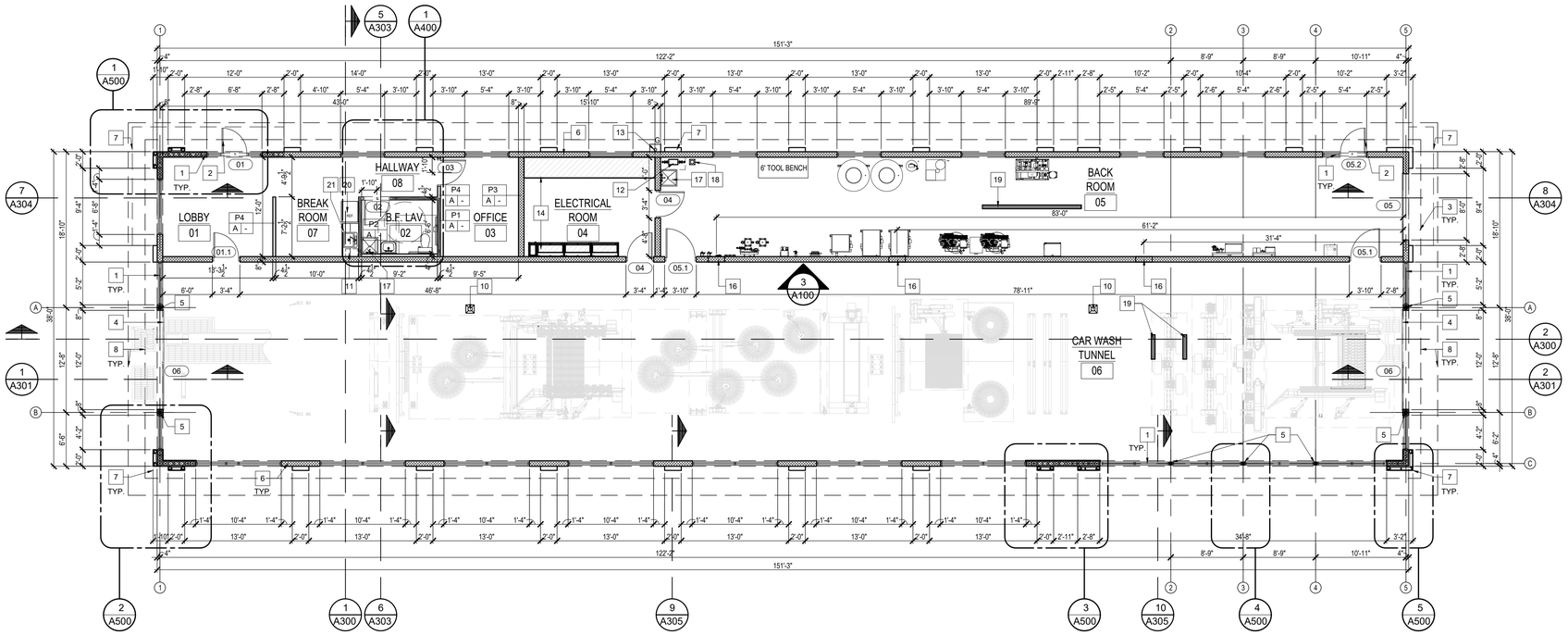

1 PROPOSED FLOOR PLAN

SCALE: 1/8" = 1'-0"

NORTH

GENERAL NOTES:

1. DOOR HANDLES, PULLS,LATCHES, LOCKS, AND OTHER OPERATIONS TO BE AT 48" A.F.F. MAX. AND 34" A.F.F. MIN.
2. DOORS TO HAZARDOUS AREAS TO HAVE HARDWARE W/ ROUGH FINISH
3. ALL EXIT DOORS TO HAVE PANIC DEVICE CLOSERS AND SHALL NOT LOCK AGAINST EGRESS OR OTHER HARDWARE COMPLYING W/ SEC. 008.1.8.
4. LOCKING DEVICES TO BE ACTIVATED BY NO MORE THEN ONE-HALF TURN, ACTIVATED BY LEVER TYPE.
5. ALL DOOR HANDLES TO BE LEVER TYPE.
6. ALL VERTICAL CHANGES IN FLOOR ELEVATION, INCLUDING DOOR THRESHOLDS, SHALL BE LIMITED TO 1/4" UNLESS A 1 TO 2 RISE-TO-RUN RATIO PROVIDED IN THE TRANSITION BETWEEN ELEVATIONS; IN WHICH A 1/2" MAX. DIFFERENCE IS ALLOWED, SAID CHANGES IN ELEVATION SHALL COMPLY WITH ICC/ANSI A117.1-2003.
7. ALL MILLWORK/CASEWORK COUNTERTOPS HAVE A MAXIMUM 34" HEIGHT A.F.F. UNLESS NOTED OTHERWISE.

TYPICAL NOTES:

1. HARDWARE SELECTED BY OWNER
2. ALL INTERIOR FINISH AND TRIM SHALL COMPLY W/ LOCAL ORDINANCES, CURRENT 2015 MICHIGAN BUILDING CODE SECTION, CHAPTER 8
3. CLASS C: FLAME SPREAD 76-200, SMOKE DEVELOPMENT 0-450. CONTRACTOR TO SUBMIT DOC'S AS REQUIRED.

   PRIOR TO INSTALLATION OF ANY PROPOSED APPLICABLE INTERIOR WALL AND CEILING FINISHES, PROVIDE TO THE CITY'S FIELD INSPECTOR DOCUMENTATION SHOWING THEIR CLASS, FLAME SPREAD AND SMOKE DEVELOPED INDEXES.
4. INSULATION FLAME SPREAD INDEX REQUIREMENTS SHALL BE IN ACCORDANCE WITH ASTM E 84.

   A. CONCEALED OR EXPOSED INSTALLATION SHALL HAVE RATING OF NOT MORE THAN 25. INSULATION BETWEEN 2 LAYERS OF NONCOMBUSTILE MATERIALS W/O INTERVENING AIRSPACE SHALL BE ALLOWED TO HAVE A FLAME SPREAD INDEX OF NOT MORE THEN 100.

   B. SMOKE DEVELOPMENT INDEX RATING OF NOT MORE THAN 450.

   C. ALL INSULATION TO BE PROPERLY LABELED
5. CONTRACTOR TO PROVIDE FIRE EXTINGUISHER ON JOB AS REQUIRED BY BUILDING INSPECTOR.
6. PROVIDE MIN. (2) 5# ABC FIRE EXTINGUISHERS IN ACCORDANCE WITH NFPA 10 IN EACH TENANT SPACE. LOCATION TO BE VERIFIED WITH BUILDING INSPECTOR.
7. PROVIDE INTERNATIONAL SYMBOL FOR HANDICAPPED SIGNS FOR DIRECTION ON RESTROOM ACCESSIBILITY.
8. ALL GLAZING IN HAZARDOUS AREA SHALL BE SAFETY GLASS AND COMPLY WITH CURRENT M.B.C. SEC 2406.2 LABELS AND GLASS COMP. WITH CPSC 16CFR PART 1201.

PROPOSED FLOOR PLAN KEYED NOTES:

1. 1" INSUL. TEMP. GLASS SET IN ALUM. FRAME STOREFRONT. (LOW-E)
2. INSUL. TEMP. GLASS SET IN ALUM FRAME DOOR.
3. H.M. DOOR - SEE DOOR SCHEDULE.
4. OVERHEAD DOOR - SEE DOOR SCHEDULE.
5. STEEL COLUMN. SEE FRAMING PLAN.
6. CMU.
7. METAL PANEL ON CMU.
8. LINE OF ROOF OVERHANG ABOVE.
9. LINE OF CANOPY.
10. ROOF SUMP - SEE ROOF PLAN.
11. TANKLESS WATER HEATER UNDER CABINET - PLUMBING DRAWING FOR ADDITIONAL DETAILS.
12. WATER METER.
13. GAS METER.
14. ELECTRICAL EQUIPMENT. SEE ELECTRICAL DRAWING.
15. EQUIPMENT - SEE DRAWINGS PREPARED BY MOTOR CITY WASH WORKS.
16. 2'-0"W. x 8"H. OPENING AT 11'-4" A.F.F.
17. SERVICE SINK - SEE PLUMBING DRAWINGS.
18. 3" FLOOR DRAIN - SEE PLUMBING DRAWINGS.
19. TRENCH DRAIN - SEE PLUMBING DRAWINGS.
20. REFRIGERATOR BY TENANT.
21. UPPER AND LOWER CABINETS W/ SINK @ MAX. 34" A.F.F. TO RIM / BOWL.

SMA
Serra Marko Associates
Architects
1055 SOUTH BLVD. E, SUITE 200 ROCHESTER HILLS, MI 48307
P (248) 457-6903
s-m-associates.com

SERRA-MARKO AND ASSOCIATES RETAINS THE OWNERSHIP OF THIS DOCUMENT AS INSTRUMENT OF SERVICE, AND IT CANNOT BE REUSED WITHOUT WRITTEN PERMISSION AND ADDITIONAL COMPENSATION.

COPYRIGHT © 2025 SERRA-MARKO ASSOCIATES

JOHNNY'S CAR WASH

LIVONIA, MI

CAR WASH

30207 PLYMOUTH RD.
LIVONIA, MI 48150

STATE OF MICHIGAN
PIETRO D'ALEO
ARCHITECT
3010558

ISSUANCE:
- ☐ SCHEMATIC
- ☐ BIDDING
- ☐ MUNI SUBMITTAL
- ☐ CONSTRUCTION
- ■ OTHER: SITE PLN APP.

DRAWINGS SHALL NOT BE USED FOR CONSTRUCTION UNLESS INDICATED

NO.	DESCRIPTION	DATE
1	SITE PLAN REVIEW	04/17/24

ISSUE DATE: 03-19-25
DB: EM
CB: PD
SHEET: A100
PROJECT NO. 25-1161

PROPOSED FLOOR PLAN

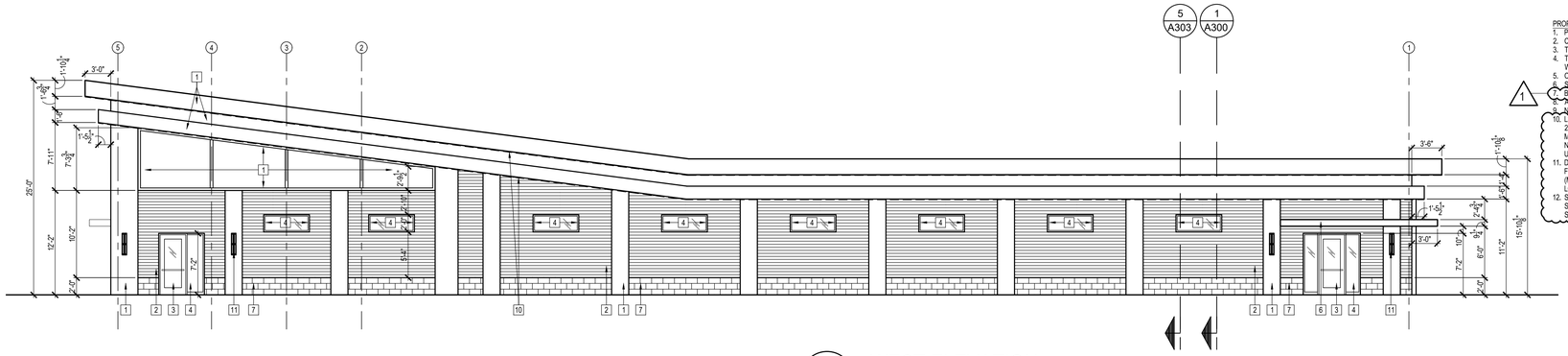

1 WEST ELEVATION

SCALE: 1/8" = 1'-0"

PROPOSED ELEVATION KEYED NOTES:

1. PRE-FIN. METAL PANEL.
2. CORRUGATED METAL SIDING.
3. TEMP. GLASS SET IN ALUM. FRAME DOOR.
4. TEMP. GLASS SET IN ALUM. FRAME WINDOW.
5. O.H. DOOR.
6. STEEL CANOPY.
7. BURNISHED BLOCK.
8. ROOF OVERHANG.
9. ADEJUSED.
10. LED TAPE LIGHT FIXTURE (DOUBLE-ROW 2835 240LEDS LED STRIP LIGHT, MANUFACTURED BY: WASH GEC, MODEL NO.: AL-SL2835W-240L) MOUNTED TO UNDERSIDE OF OVERHANG.
11. DECORATIVE LED WALL MOUNTED LIGHT FIXTURE - SEE PHOTOMETRIC PLAN (MANUFACTURED BY VISA, MODEL: OW1044 LOW1000).
12. SIGN (38 S.F. MAX.) BY SIGN CONTRACTOR SUBMITTED UNDER SEPARATE PERMIT BY SIGN CONTRACTOR.

NOTE:
THERE WILL BE NO ROOF MOUNTED MECHANICAL EQUIPMENT. MECHANICAL EQUIPMENT WILL CONSIST OF RADIANT HEATERS, AIR HANDLERS AND A/C UNIT.

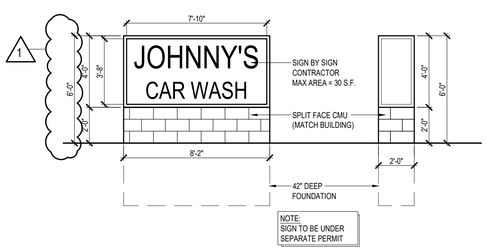

5 MONUMENT SIGN ELEVATION

SCALE: 1/4" = 1'-0"

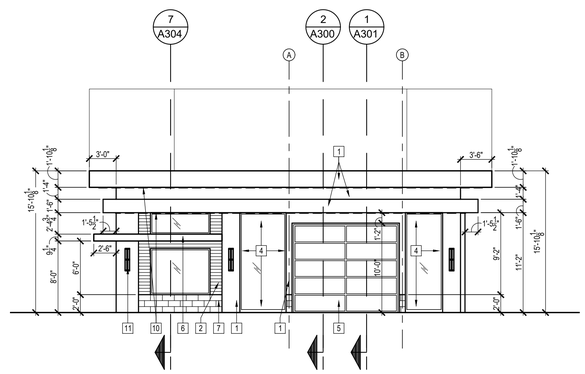

2 SOUTH ELEVATION

SCALE: 1/8" = 1'-0"

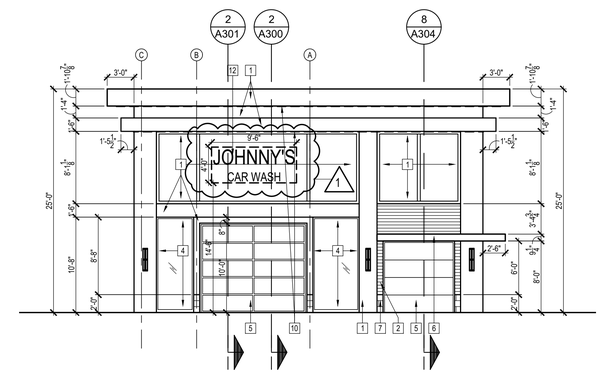

3 NORTH ELEVATION

SCALE: 1/8" = 1'-0"

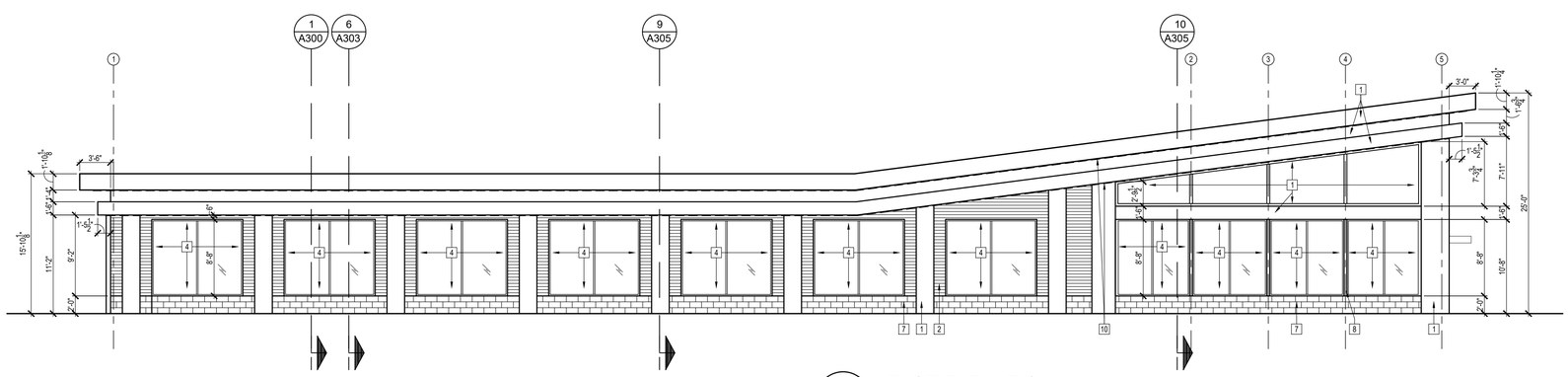

4 EAST ELEVATION

SCALE: 1/8" = 1'-0"

SMA
Serra Marko Associates
Architects
1055 SOUTH BLVD. E, SUITE 200 ROCHESTER HILLS, MI 48307
P (248) 457-6903
s-m-associates.com

SERRA-MARKO AND ASSOCIATES RETAINS THE OWNERSHIP OF THIS DOCUMENT AS INSTRUMENT OF SERVICE, AND IT CANNOT BE REUSED WITHOUT WRITTEN PERMISSION AND ADDITIONAL COMPENSATION.

COPYRIGHT © 2025 SERRA-MARKO ASSOCIATES

JOHNNY'S CAR WASH

LIVONIA, MI

CAR WASH

30207 PLYMOUTH RD.
LIVONIA, MI 48150

STATE OF MICHIGAN
PIETRO D'ALEO
ARCHITECT
No. 3010558

ISSUANCE:

- ☐ SCHEMATIC
- ☐ BIDDING
- ☐ MUNI SUBMITTAL
- ☐ CONSTRUCTION
- ■ OTHER: SITE PLN APP.

DRAWINGS SHALL NOT BE USED FOR CONSTRUCTION UNLESS INDICATED

NO.	DESCRIPTION	DATE
1	SITE PLAN REVIEW	04/17/24

ISSUE DATE: 03-19-25

DB EM

CB PD

SHEET A200

PROJECT NO. 25-1161

PROPOSED ELEVATIONS

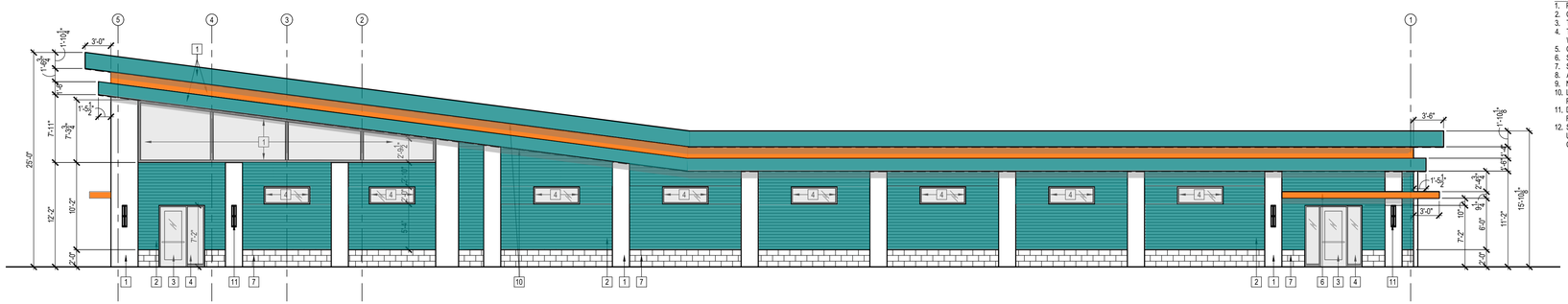

1 WEST ELEVATION

SCALE: 1/8" = 1'-0"

PROPOSED ELEVATION KEYED NOTES:

1. PRE-FIN. METAL PANEL.
2. CORRUGATED METAL SIDING.
3. TEMP. GLASS SET IN ALUM. FRAME DOOR.
4. TEMP. GLASS SET IN ALUM. FRAME WINDOW.
5. O.H. DOOR.
6. STEEL CANOPY.
7. SPLIT-FACE CMU.
8. ALUM. CLOSURE.
9. NOT USED.
10. LED TAPE LIGHT FIXTURE - SEE PHOTOMETRIC PLAN.
11. DECORATIVE LED WALL MOUNTED LIGHT FIXTURE - SEE PHOTOMETRIC PLAN.
12. SIGN BY SIGN CONTRACTOR SUBMITTED UNDER SEPARATE PERMIT BY SIGN CONTRACTOR.

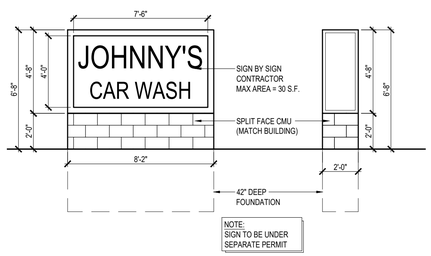

5 MONUMENT SIGN ELEVATION

SCALE: 1/4" = 1'-0"

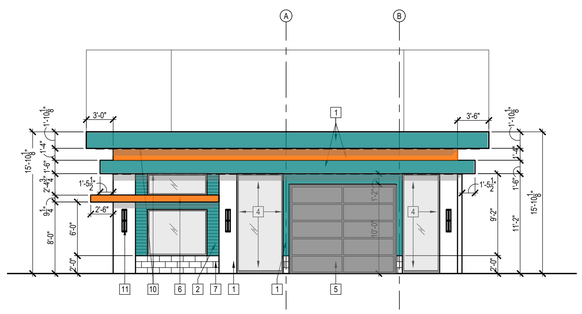

2 SOUTH ELEVATION

SCALE: 1/8" = 1'-0"

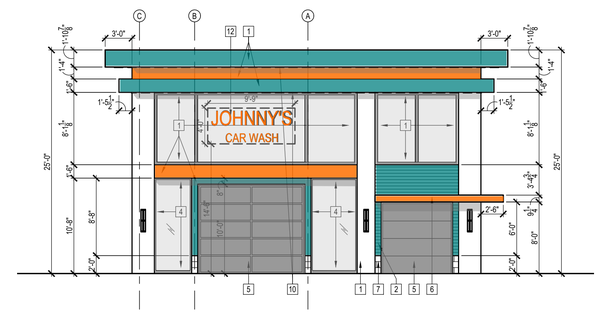

3 NORTH ELEVATION

SCALE: 1/8" = 1'-0"

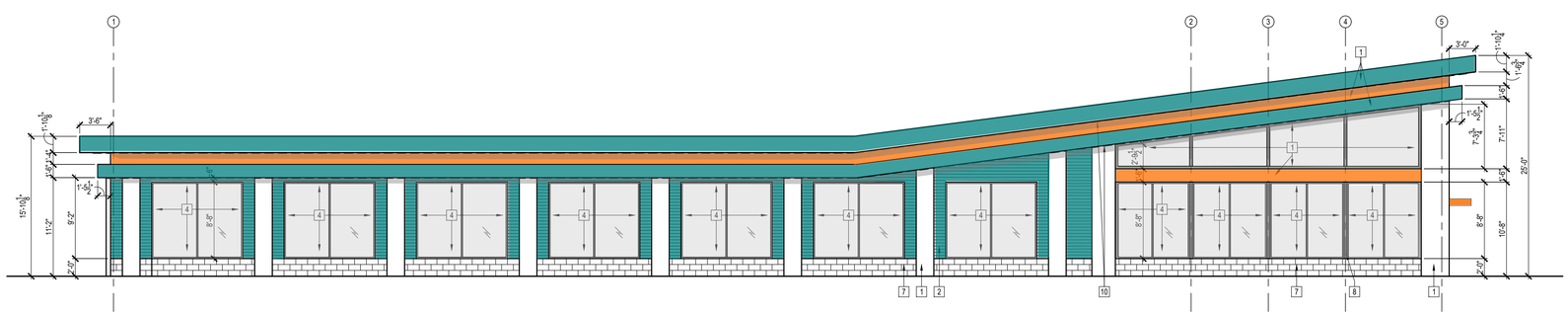

4 EAST ELEVATION

SCALE: 1/8" = 1'-0"

SMA
Serra Marko Associates
Architects
1055 SOUTH BLVD. E, SUITE 200 ROCHESTER HILLS, MI 48307
P (248) 457-6903
s-m-associates.com

SERRA-MARKO AND ASSOCIATES RETAINS THE OWNERSHIP OF THIS DOCUMENT AS INSTRUMENT OF SERVICE, AND IT CANNOT BE REUSED WITHOUT WRITTEN PERMISSION AND ADDITIONAL COMPENSATION.

COPYRIGHT © 2025 SERRA-MARKO ASSOCIATES

JOHNNY'S CAR WASH

LIVONIA, MI

CAR WASH

30207 PLYMOUTH RD.
LIVONIA, MI 48150

STATE OF MICHIGAN
PIETRO D'ALEO
ARCHITECT
No. 3010558

ISSUANCE:

- ☐ SCHEMATIC
- ☐ BIDDING
- ☐ MUNI SUBMITTAL
- ☐ CONSTRUCTION
- ■ OTHER: SITE PLN APP.

DRAWINGS SHALL NOT BE USED FOR CONSTRUCTION UNLESS INDICATED

NO.	DESCRIPTION	DATE

ISSUE DATE: 03-19-25

DB EM

CB PD

SHEET A200

PROJECT NO. 25-1161

PROPOSED ELEVATIONS

WASH GEC INC
4876 RIVER HILLS DR DENVER, NC 28037
WWW.WASHGEC.COM

Wash GEC Strip Light 22ft

Double-row 240leds LED Strip Light

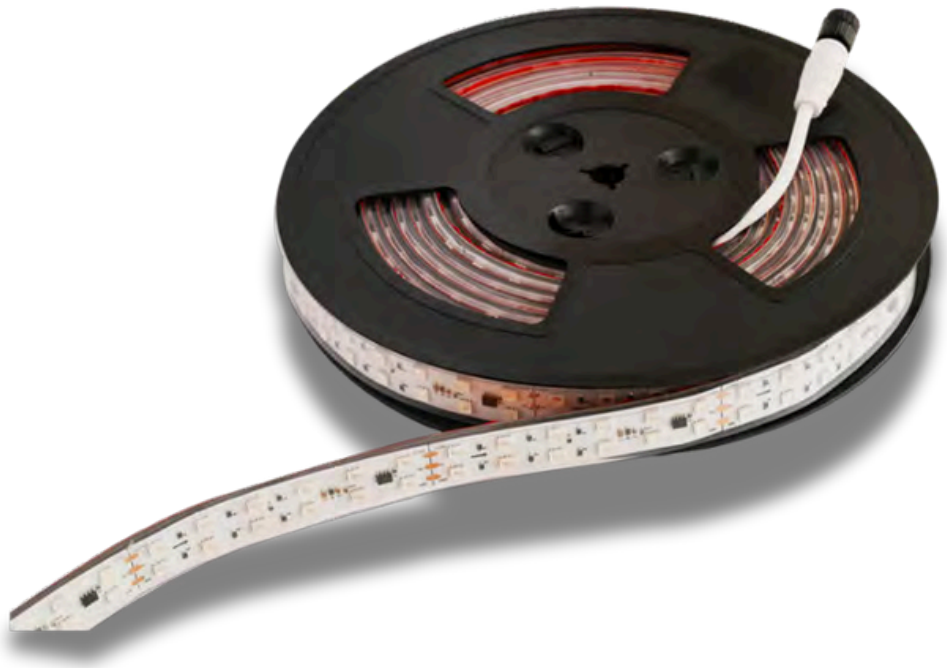

THE DOUBLE-ROW 2835 LEDFLEXIBLE STRIP IS MADE OF SUPER BRIGHT 2835 SMD LED, THE FEATURES OF FLEXIBLE, DURABLE AND DIFFERENT PRODUCTION PROCESS MAKE IT WIDELY USE IN DIFFERENT APPLICATIONS. IP67 WATERPROOF. IT WORKS UNDER CONSTANT VOLTAGE DC24V WHICH IS SAFER THAN HIGH VOLTAGE TUBES OR STRIPS.

PRODUCT PARAMETERS

Product Name	Double-row 2835 240leds LED Strip Light
Model No.	AL-SL2835W-240L
Source Type / Qty	SMD2835, 240leds/meter
Input Voltage	DC 24V
PCB Width	20MM
Size	W22*H4mm
Color Temperature	2700-6000K
Rated Power	28W
Lifespan	50,000 hours
Working Temperature	-25°C - 45°C
Storage Temperature	-20°C- 50°C
IP Rate	IP67
Warranty	3 years
Cut Unit	25MM

PRODUCT FEATURES:

- TOP QUALITY & HIGH BRIGHTNESS 2835SMD
- HIGH-CONDUCTIVITY DOUBLE-LAYER PURE COPPER FPCB
- MULTIPLE INSTALLATION METHOD, ORIGINAL 3M TAPE OR CLIPS
- LOW POWER CONSUMPTION FOR ENERGY SAVING
- CE/ROHS/FCC APPROVED

INSTALLATION WIRING

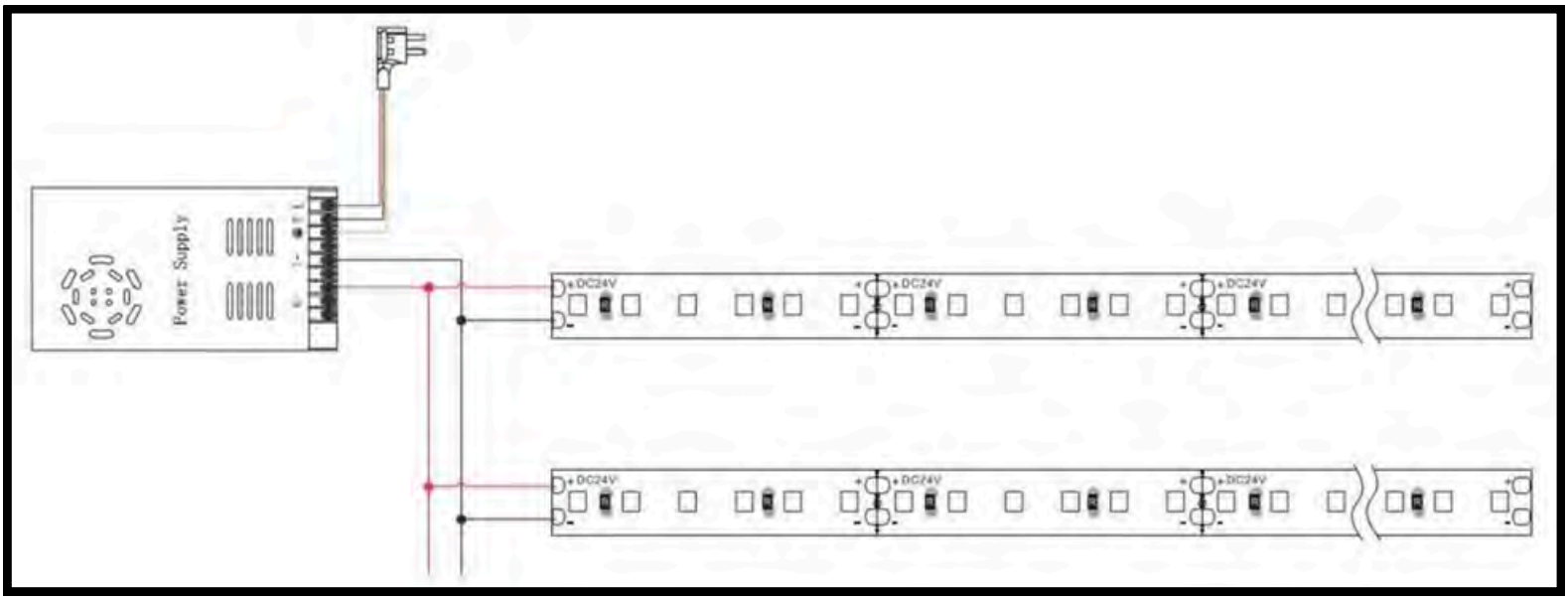

- MAKE SURE OF THE TOTAL WATTS OF LED STRIP LIGHTS IS LESS THAN 80% OF THE POWER SUPPLY'S MAX OUTPUT.
- MATCH THE POLARITIES ACCORDINGTO THE MARK (“ + ” “ -”) IN THE PCB WHILE CONNECTING.
- INPUT DC 24V ACCORDINGTO THE MARK ON PCB..

PRODUCT DIMENSION:

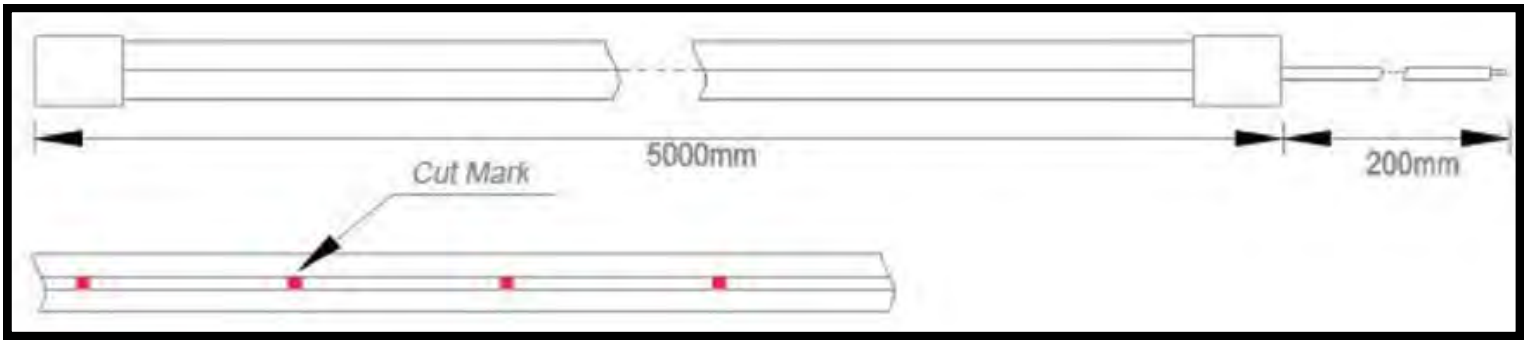

THE ABOVE BASED ON MM.
IT CAN BE CUT, THE SMALLEST CUT UNIT 25MM@DC24V.

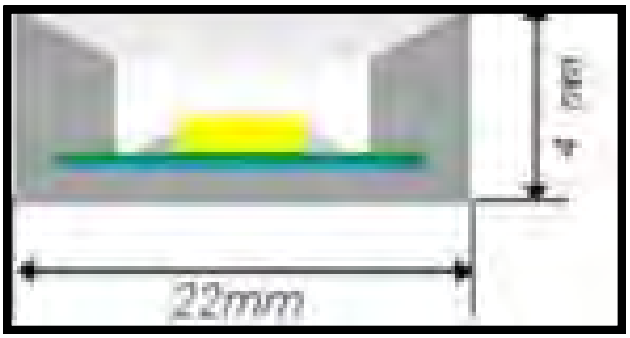

APPLICATION

IDEAL FOR: CAR WASH ARCHES, TUNNEL/BAY WALLS OR CEILINGS, AND FOR EXTERIOR ACCENT LIGHTING.

PACKAGE:

- 6.7 METERS(22FT) PER ROLL.
- EACH ROLL PACKED WITH ANTI-STATIC BAGS, AND NEUTRAL OR CUSTOMIZED LABEL ON IT.
- 50 ROLLS INTO A CARTON (ROUGHLY 50CM*42CM*26CM).
- WELL PACKED AND SAFETY DELIVERY TO CLIENTS.

LUMINAIRE PHOTOMETRIC TEST REPORT

Test:U:119.89V I:0.3165A P:37.739W PF:0.9945 Freq:60.01Hz UTHDi:0.25% ITHDi:1.73% KDisp:1.000 Lamp Flux:2615.23x1 lm		
NAME: 线条灯36W	TYPE: 线条灯36W	WEIGHT:
SPEC.: 120~277V	DIM.: 0.23*0.32	SERIAL No.: 01
MFR.:	SUR.: 0.2*0.29	Shielding Angle:

DATA OF LAMP		PHOTOMETRIC DATA Eff: 69.30 lm/W			
MODEL	线条灯36W	Imax(cd)	838.5	S/MH(C0/180)	1.32
NOMINAL POWER(W)	36	LOR(%)	100.0	S/MH(C90/270)	1.27
RATED VOLTAGE(V)	120	TOTAL FLUX(lm)	2615.2	η UP,DN(C0-180)	1.7,47.9
NOMINAL FLUX(lm)	2615.23	CIE CLASS	DIRECT	η UP,DN(C180-360)	1.8,48.6
LAMPS INSIDE	1	η up(%)	3.5	CIBSE SHR NOM	1.25
TEST VOLTAGE(V)	120	η down(%)	96.5	CIBSE SHR MAX	1.35

LUMINOUS INTENSITY DISTRIBUTION DIAGRAM

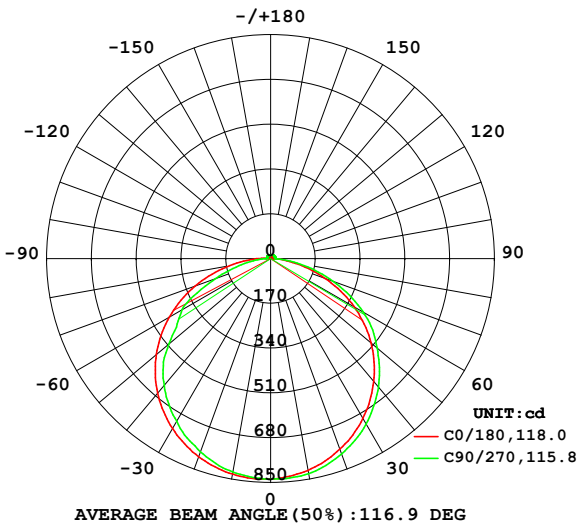

AVERAGE BEAM ANGLE(50%):116.9 DEG

PLANAR ISOLUX DIAGRAM(UNIT:lx)

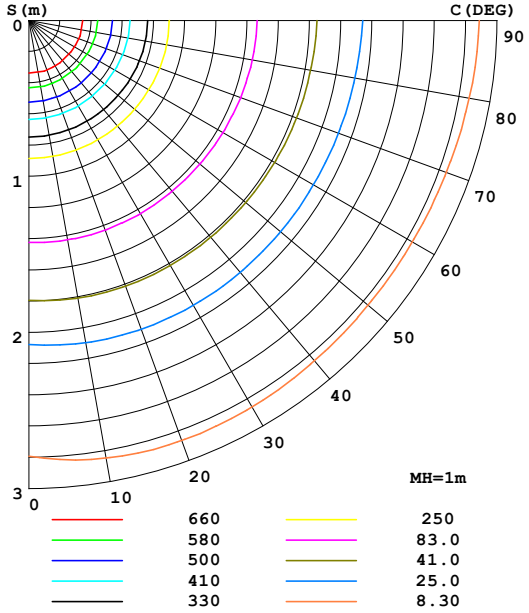

C Range: 0 - 360DEG
C Interval: 22.5DEG
Test Speed: MEDIUM
Temperature:25.3℃
Operators:
Test Date:17 April 2025

γ Range: 0 - 180DEG
γ Interval: 1.0DEG
Test System:EVERFINE GO-2000B_V1 SYSTEM V2.00.458
Humidity:65.0%
Test Distance:8.050m [K=1.0000]
Remarks:

ZONAL FLUX DIAGRAM

ZONAL FLUX DIAGRAM:

γ	C0	C45	C90	C135	C180	C225	C270	C315	γ	Φ zone	Φ total	%lum,lamp
10	816.6	817.8	828.6	827.4	830.7	830.1	822.8	821.7	0- 10	79.30	79.30	3.03,3.03
20	770.1	768.3	788.8	787.9	800.4	798.7	780.5	780.2	10- 20	228.0	307.3	11.7,11.7
30	700.7	698.4	725.4	728.9	745.2	743.3	713.4	713.2	20- 30	347.7	654.9	25,25
40	609.1	608.7	637.5	647.2	666.9	660.4	628.6	615.3	30- 40	423.5	1078	41.2,41.2
50	497.8	500.2	528.1	544.9	566.5	555.8	504.6	498.4	40- 50	447.4	1526	58.3,58.3
60	366.5	377.8	405.5	426.1	443.9	433.8	389.2	368.1	50- 60	414.6	1940	74.2,74.2
70	220.6	235.7	253.1	278.5	304.1	305.3	221.4	199.3	60- 70	327.8	2268	86.7,86.7
80	84.49	95.25	103.5	128.6	158.6	137.0	89.19	79.03	70- 80	191.3	2459	94,94
90	9.714	16.30	17.63	32.76	46.78	28.78	20.07	15.64	80- 90	64.35	2524	96.5,96.5
100	8.786	15.16	17.20	23.14	8.031	17.87	15.37	15.72	90-100	21.45	2545	97.3,97.3
110	8.722	15.45	16.56	8.975	8.614	8.669	15.73	15.24	100-110	15.60	2561	97.9,97.9
120	9.364	16.85	17.72	9.244	9.193	9.215	17.47	15.95	110-120	12.61	2573	98.4,98.4
130	10.11	17.61	16.49	9.906	9.786	9.798	17.00	17.41	120-130	11.45	2585	98.8,98.8
140	10.92	16.89	16.81	10.60	10.46	10.48	15.43	18.22	130-140	10.21	2595	99.2,99.2
150	11.92	15.12	17.30	11.60	11.41	11.22	12.80	17.38	140-150	8.458	2604	99.6,99.6
160	12.71	13.72	16.58	14.62	12.34	13.50	13.15	15.42	150-160	6.380	2610	99.8,99.8
170	13.29	13.49	14.94	14.47	13.10	13.29	13.73	14.21	160-170	3.923	2614	99.9,99.9
180	13.54	13.53	14.24	14.53	13.54	13.54	14.12	14.54	170-180	1.326	2615	100,100
DEG	LUMINOUS INTENSITY:cd									UNIT:lm		

Conical surface Flux(90deg): 1302.8 lm

%lum = 49.8%
%lamp = 49.8%

Conical surface Flux(130deg): 2119.4 lm

%lum = 81.0%
%lamp = 81.0%

C Range: 0 - 360DEG
C Interval: 22.5DEG
Test Speed: MEDIUM
Temperature:25.3℃
Operators:
Test Date:17 April 2025

γ Range: 0 - 180DEG
γ Interval: 1.0DEG
Test System:EVERFINE GO-2000B_V1 SYSTEM V2.00.458
Humidity:65.0%
Test Distance:8.050m [K=1.0000]
Remarks:

LUMINANCE LIMITATION CURVES

Test:U:119.89V I:0.3165A P:37.739W PF:0.9945 Freq:60.01Hz UTHDi:0.25% ITHDi:1.73% KDisp:1.000 Lamp Flux:2615.23x1 lm		
NAME: 线条灯36W	TYPE: 线条灯36W	WEIGHT:
SPEC.: 120~277V	DIM.: 0.23*0.32	SERIAL No.: 01
MFR.:	SUR.: 0.2*0.29	Shielding Angle:

LUMINANCE LIMITATION CURVES

GLARE	CLASS	ILLUMINANCE (lx)							
1.15	A	2000	1000	500	<=300				
1.50	B		2000	1000	500	<=300			
1.85	C			2000	1000	500	<=300		
2.20	D				2000	1000	500	<=300	
2.55	E					2000	1000	500	<=300

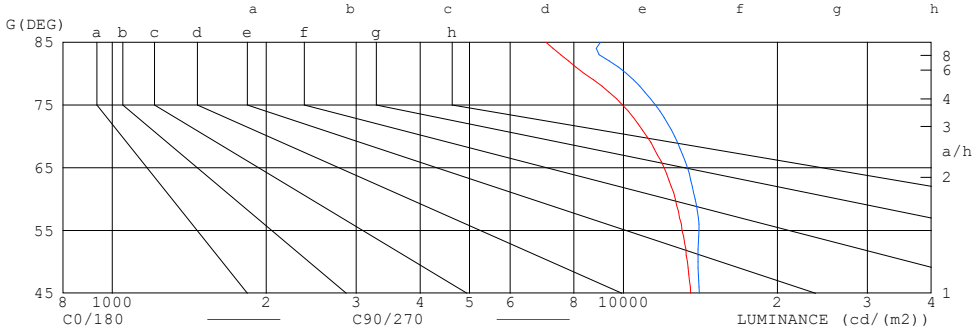

LUMINANCE cd/(m2)		
G(DEG)	C0/180	C90/270
85	7057	9007
80	8382	10148
75	9959	11543
70	11113	12598
65	12010	13346
60	12627	13810
55	13020	14053
50	13343	13989
45	13541	14070

C Range: 0 - 360DEG
C Interval: 22.5DEG
Test Speed: MEDIUM
Temperature:25.3℃
Operators:
Test Date:17 April 2025

γ Range: 0 - 180DEG
γ Interval: 1.0DEG
Test System:EVERFINE GO-2000B_V1 SYSTEM V2.00.458
Humidity:65.0%
Test Distance:8.050m [K=1.0000]
Remarks:

CU AND LUMINAIRE BUDGETARY ESTIMATE DIAGRAM

Test:U:119.89V I:0.3165A P:37.739W PF:0.9945 Freq:60.01Hz
UTHDi:0.25% ITHDi:1.73% KDisp:1.000 Lamp Flux:2615.23x1 lm

NAME: 线条灯36W	TYPE: 线条灯36W	WEIGHT:
SPEC.: 120~277V	DIM.: 0.23*0.32	SERIAL No.: 01
MFR.:	SUR.: 0.2*0.29	Shielding Angle:

ρcc	80%			70%			50%			30%			10%			0
ρw	50%	30%	10%	50%	30%	10%	50%	30%	10%	50%	30%	10%	50%	30%	10%	0
ρfc	20%			20%			20%			20%			20%			0
RCR	RCR:Room Cavity Ratio						Coefficients of Utilization(CU)									
0.0	1.18	1.18	1.18	1.15	1.15	1.15	1.09	1.09	1.09	1.04	1.04	1.04	.99	.99	.99	.97
1.0	1.03	.98	.94	.00	.96	.92	.95	.92	.89	.90	.88	.85	.86	.84	.82	.80
2.0	.89	.82	.76	.87	.80	.75	.83	.77	.73	.79	.74	.70	.75	.72	.68	.66
3.0	.78	.69	.63	.76	.68	.62	.72	.66	.60	.69	.64	.59	.66	.62	.58	.55
4.0	.69	.60	.53	.67	.59	.52	.64	.57	.51	.61	.55	.50	.59	.54	.49	.47
5.0	.61	.52	.45	.60	.51	.45	.57	.50	.44	.55	.48	.43	.53	.47	.43	.40
6.0	.55	.46	.39	.54	.45	.39	.52	.44	.38	.50	.43	.38	.48	.42	.37	.35
7.0	.50	.41	.35	.49	.40	.34	.47	.39	.34	.45	.38	.33	.44	.38	.33	.31
8.0	.45	.37	.31	.45	.36	.31	.43	.36	.30	.41	.35	.30	.40	.34	.29	.28
9.0	.42	.33	.28	.41	.33	.28	.39	.32	.27	.38	.32	.27	.37	.31	.27	.25
10.0	.38	.30	.25	.38	.30	.25	.36	.29	.25	.35	.29	.24	.34	.28	.24	.22

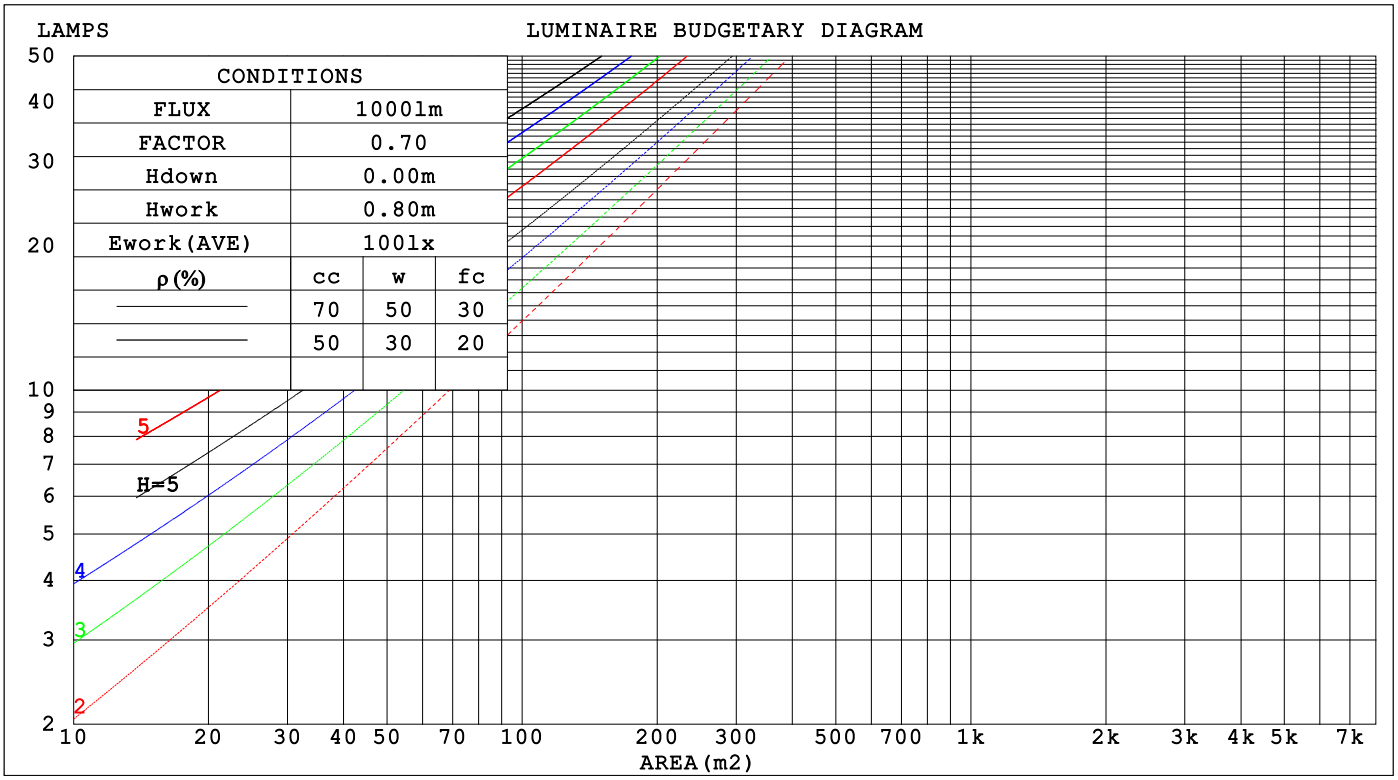

C Range: 0 - 360DEG
C Interval: 22.5DEG
Test Speed: MEDIUM
Temperature:25.3℃
Operators:
Test Date:17 April 2025

γ Range: 0 - 180DEG
γ Interval: 1.0DEG
Test System:EVERFINE GO-2000B_V1 SYSTEM V2.00.458
Humidity:65.0%
Test Distance:8.050m [K=1.0000]
Remarks:

WEC AND CCEC

Test:U:119.89V I:0.3165A P:37.739W PF:0.9945 Freq:60.01Hz UTHDi:0.25% ITHDi:1.73% KDisp:1.000 Lamp Flux:2615.23x1 lm		
NAME: 线条灯36W	TYPE: 线条灯36W	WEIGHT:
SPEC.: 120~277V	DIM.: 0.23*0.32	SERIAL No.: 01
MFR.:	SUR.: 0.2*0.29	Shielding Angle:

ρcc	80%			70%			50%			30%			10%			0
ρw	50%	30%	10%	50%	30%	10%	50%	30%	10%	50%	30%	10%	50%	30%	10%	0
ρfc	20%			20%			20%			20%			20%			0
RCR	RCR:Room Cavity Ratio						Wall Exitance Coeffcients(WEC)									
0.0																
1.0	.320	.182	.058	.312	.178	.056	.296	.170	.054	.282	.163	.052	.269	.156	.050	
2.0	.298	.163	.050	.291	.160	.049	.277	.154	.048	.265	.148	.046	.253	.143	.045	
3.0	.274	.146	.044	.268	.143	.043	.256	.139	.042	.245	.134	.041	.234	.130	.040	
4.0	.252	.131	.039	.247	.129	.038	.236	.125	.037	.226	.121	.037	.216	.118	.036	
5.0	.233	.119	.034	.228	.117	.034	.218	.113	.033	.209	.110	.033	.201	.107	.032	
6.0	.215	.108	.031	.211	.107	.031	.202	.104	.030	.194	.101	.030	.186	.098	.029	
7.0	.200	.099	.028	.196	.098	.028	.188	.095	.027	.181	.093	.027	.174	.090	.027	
8.0	.187	.091	.026	.183	.090	.025	.176	.088	.025	.169	.086	.025	.163	.084	.024	
9.0	.175	.085	.024	.172	.084	.023	.165	.082	.023	.159	.080	.023	.153	.078	.023	
10.0	.164	.079	.022	.161	.078	.022	.155	.076	.021	.150	.074	.021	.145	.073	.021	

ρcc	80%			70%			50%			30%			10%			0
ρw	50%	30%	10%	50%	30%	10%	50%	30%	10%	50%	30%	10%	50%	30%	10%	0
ρfc	20%			20%			20%			20%			20%			0
RCR	RCR:Room Cavity Ratio						Ceiling Cavity Exitance Coefficients(CCEC)									
0.0	.217	.217	.217	.186	.186	.186	.127	.127	.127	.073	.073	.073	.023	.023	.023	
1.0	.208	.183	.160	.178	.157	.138	.122	.108	.095	.070	.062	.056	.022	.020	.018	
2.0	.200	.159	.124	.171	.137	.107	.117	.095	.075	.068	.055	.044	.022	.018	.014	
3.0	.193	.142	.101	.165	.122	.087	.113	.085	.061	.065	.050	.036	.021	.016	.012	
4.0	.185	.128	.085	.159	.111	.074	.109	.077	.052	.063	.045	.031	.020	.015	.010	
5.0	.178	.118	.074	.152	.102	.065	.105	.071	.046	.061	.042	.027	.020	.014	.009	
6.0	.170	.110	.066	.146	.095	.058	.101	.067	.041	.059	.039	.024	.019	.013	.008	
7.0	.163	.103	.061	.141	.089	.053	.097	.063	.037	.056	.037	.022	.018	.012	.007	
8.0	.157	.097	.056	.135	.084	.049	.094	.059	.035	.054	.035	.021	.018	.011	.007	
9.0	.151	.092	.053	.130	.080	.046	.090	.056	.033	.052	.033	.019	.017	.011	.006	
10.0	.145	.088	.050	.125	.076	.044	.087	.054	.031	.051	.032	.019	.016	.010	.006	

C Range: 0 - 360DEG
C Interval: 22.5DEG
Test Speed: MEDIUM
Temperature:25.3℃
Operators:
Test Date:17 April 2025

γ Range: 0 - 180DEG
γ Interval: 1.0DEG
Test System:EVERFINE GO-2000B_V1 SYSTEM V2.00.458
Humidity:65.0%
Test Distance:8.050m [K=1.0000]
Remarks:

UGR(Unified Glare Rating) Table

Test:U:119.89V I:0.3165A P:37.739W PF:0.9945 Freq:60.01Hz UTHDi:0.25% ITHDi:1.73% KDisp:1.000 Lamp Flux:2615.23x1 lm		
NAME: 线条灯36W	TYPE: 线条灯36W	WEIGHT:
SPEC.: 120~277V	DIM.: 0.23*0.32	SERIAL No.: 01
MFR.:	SUR.: 0.2*0.29	Shielding Angle:

ceiling/cavity	0.7	0.7	0.5	0.5	0.3	0.7	0.7	0.5	0.5	0.3
walls	0.5	0.3	0.5	0.3	0.3	0.5	0.3	0.5	0.3	0.3
working plane	0.2	0.2	0.2	0.2	0.2	0.2	0.2	0.2	0.2	0.2
Room dimensions	Viewed crosswise					Viewed endwise				
x = 2H y = 2H	21.5	23.0	21.8	23.3	23.5	21.7	23.2	22.0	23.5	23.8
3H	23.0	24.4	23.3	24.7	25.0	23.3	24.7	23.6	25.0	25.3
4H	23.6	24.9	23.9	25.2	25.5	23.9	25.2	24.3	25.5	25.9
6H	23.9	25.1	24.3	25.5	25.8	24.3	25.5	24.7	25.9	26.2
8H	24.0	25.2	24.4	25.5	25.9	24.4	25.6	24.8	26.0	26.3
12H	24.0	25.2	24.4	25.5	25.9	24.5	25.6	24.9	26.0	26.4
4H 2H	22.1	23.4	22.5	23.8	24.1	22.3	23.6	22.7	23.9	24.3
3H	23.8	25.0	24.2	25.3	25.7	24.0	25.2	24.4	25.5	25.9
4H	24.5	25.6	25.0	26.0	26.4	24.7	25.8	25.2	26.2	26.6
6H	25.0	25.9	25.5	26.3	26.8	25.3	26.2	25.7	26.6	27.1
8H	25.1	26.0	25.6	26.4	26.9	25.4	26.3	25.9	26.7	27.2
12H	25.2	26.0	25.7	26.5	27.0	25.6	26.4	26.0	26.8	27.3
8H 4H	24.8	25.6	25.2	26.1	26.5	25.0	25.8	25.4	26.3	26.7
6H	25.4	26.1	25.9	26.6	27.1	25.6	26.4	26.1	26.8	27.3
8H	25.6	26.3	26.1	26.8	27.3	25.9	26.5	26.4	27.0	27.5
12H	25.8	26.3	26.3	26.8	27.4	26.1	26.6	26.6	27.1	27.7
12H 4H	24.8	25.6	25.3	26.0	26.5	25.0	25.8	25.5	26.2	26.7
6H	25.5	26.1	26.0	26.6	27.1	25.7	26.3	26.2	26.8	27.3
8H	25.7	26.3	26.3	26.8	27.3	26.0	26.5	26.5	27.0	27.6
Variations with the observer position at spacings(CIE Pub.117):										
S = 1.0H	+ 0.2 / - 0.2					+ 0.1 / - 0.2				
1.5H	+ 0.2 / - 0.4					+ 0.2 / - 0.3				
2.0H	+ 0.2 / - 0.4					+ 0.2 / - 0.3				

CIE Pub.117, 2615 lm Total Lamp Luminous Flux Corrected (8log(F/F0) = 3.3)
Area: 0.058 m2

C Range: 0 - 360DEG
C Interval: 22.5DEG
Test Speed: MEDIUM
Temperature:25.3℃
Operators:
Test Date:17 April 2025

γ Range: 0 - 180DEG
γ Interval: 1.0DEG
Test System:EVERFINE GO-2000B_V1 SYSTEM V2.00.458
Humidity:65.0%
Test Distance:8.050m [K=1.0000]
Remarks:

UTILIZATION FACTORS TABLE

Test:U:119.89V I:0.3165A P:37.739W PF:0.9945 Freq:60.01Hz UTHDi:0.25% ITHDi:1.73% KDisp:1.000 Lamp Flux:2615.23x1 lm		
NAME: 线条灯36W	TYPE: 线条灯36W	WEIGHT:
SPEC.: 120~277V	DIM.: 0.23*0.32	SERIAL No.: 01
MFR.:	SUR.: 0.2*0.29	Shielding Angle:

REFLECTANCE										
Ceiling	0.8	0.8	0.8	0.7	0.7	0.7	0.5	0.5	0.5	0
Walls	0.7	0.5	0.3	0.7	0.5	0.3	0.7	0.5	0.3	0
Working plane	0.2	0.2	0.2	0.2	0.2	0.2	0.2	0.2	0.2	0
ROOM INDEX	UTILIZATION FACTORS(PERCENT) k(RI) x RCR = 5									
k = 0.60	55	44	37	55	43	36	53	43	36	30
0.80	65	53	46	64	53	46	62	52	45	38
1.00	74	62	55	72	62	54	70	63	54	46
1.25	81	70	63	79	69	62	76	67	61	53
1.50	86	76	68	84	75	68	81	73	66	58
2.00	93	84	77	91	83	76	87	80	75	66
2.50	97	89	82	95	87	81	90	84	79	70
3.00	100	93	87	98	91	86	93	88	84	74
4.00	105	99	94	102	97	92	97	93	89	79
5.00	107	102	98	104	100	96	99	96	92	82
ROOM INDEX	UF(total)									Direct
According to DIN EN 13032-2 2004				Suspended					SHRNOM = 1.25	

C Range: 0 - 360DEG
C Interval: 22.5DEG
Test Speed: MEDIUM
Temperature:25.3℃
Operators:
Test Date:17 April 2025

γ Range: 0 - 180DEG
γ Interval: 1.0DEG
Test System:EVERFINE GO-2000B_V1 SYSTEM V2.00.458
Humidity:65.0%
Test Distance:8.050m [K=1.0000]
Remarks:

ISOCANDELA DIAGRAM

Test:U:119.89V I:0.3165A P:37.739W PF:0.9945 Freq:60.01Hz UTHDi:0.25% ITHDi:1.73% KDisp:1.000 Lamp Flux:2615.23x1 lm		
NAME: 线条灯36W	TYPE: 线条灯36W	WEIGHT:
SPEC.: 120~277V	DIM.: 0.23*0.32	SERIAL No.: 01
MFR.:	SUR.: 0.2*0.29	Shielding Angle:

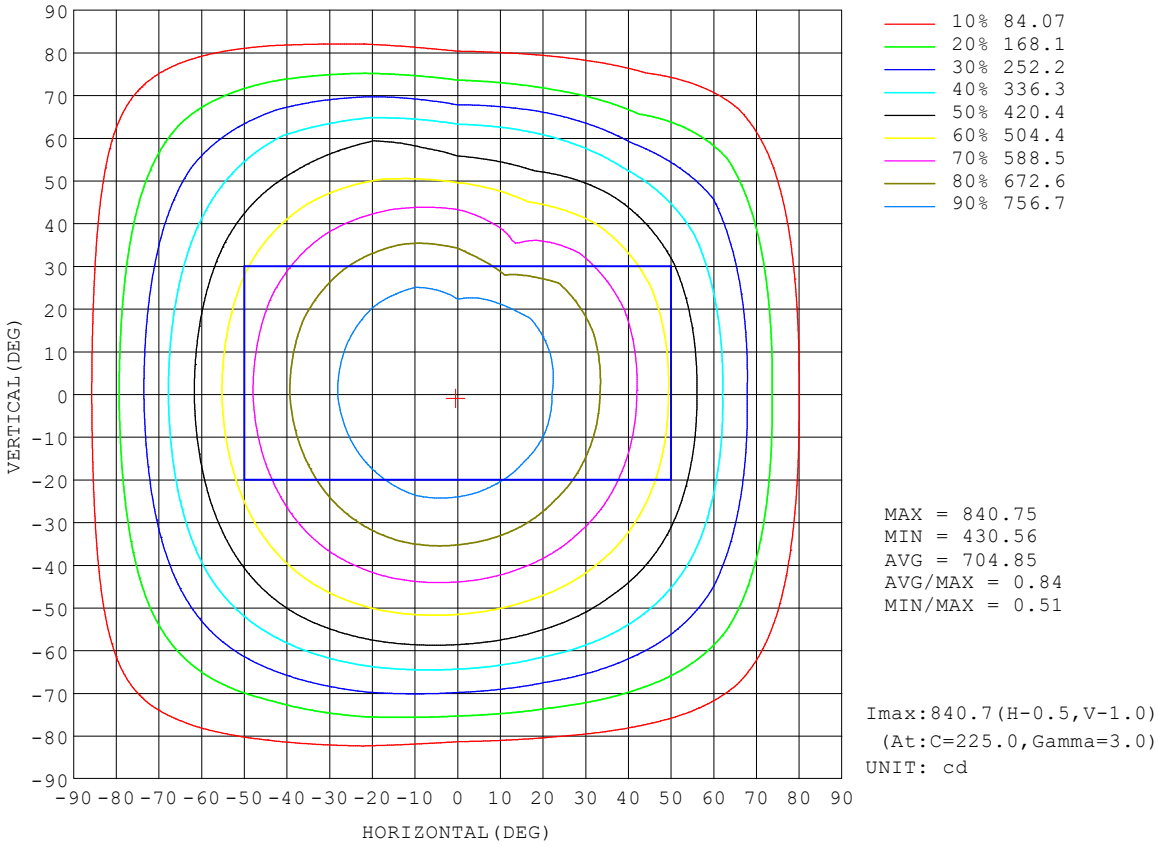

C Range: 0 - 360DEG
C Interval: 22.5DEG
Test Speed: MEDIUM
Temperature:25.3℃
Operators:
Test Date:17 April 2025

γ Range: 0 - 180DEG
γ Interval: 1.0DEG
Test System:EVERFINE GO-2000B_V1 SYSTEM V2.00.458
Humidity:65.0%
Test Distance:8.050m [K=1.0000]
Remarks:

AAI Figure

Test:U:119.89V I:0.3165A P:37.739W PF:0.9945 Freq:60.01Hz UTHDi:0.25% ITHDi:1.73% KDisp:1.000 Lamp Flux:2615.23x1 lm		
NAME: 线条灯36W	TYPE: 线条灯36W	WEIGHT:
SPEC.: 120~277V	DIM.: 0.23*0.32	SERIAL No.: 01
MFR.:	SUR.: 0.2*0.29	Shielding Angle:

Flux out:1862 lm

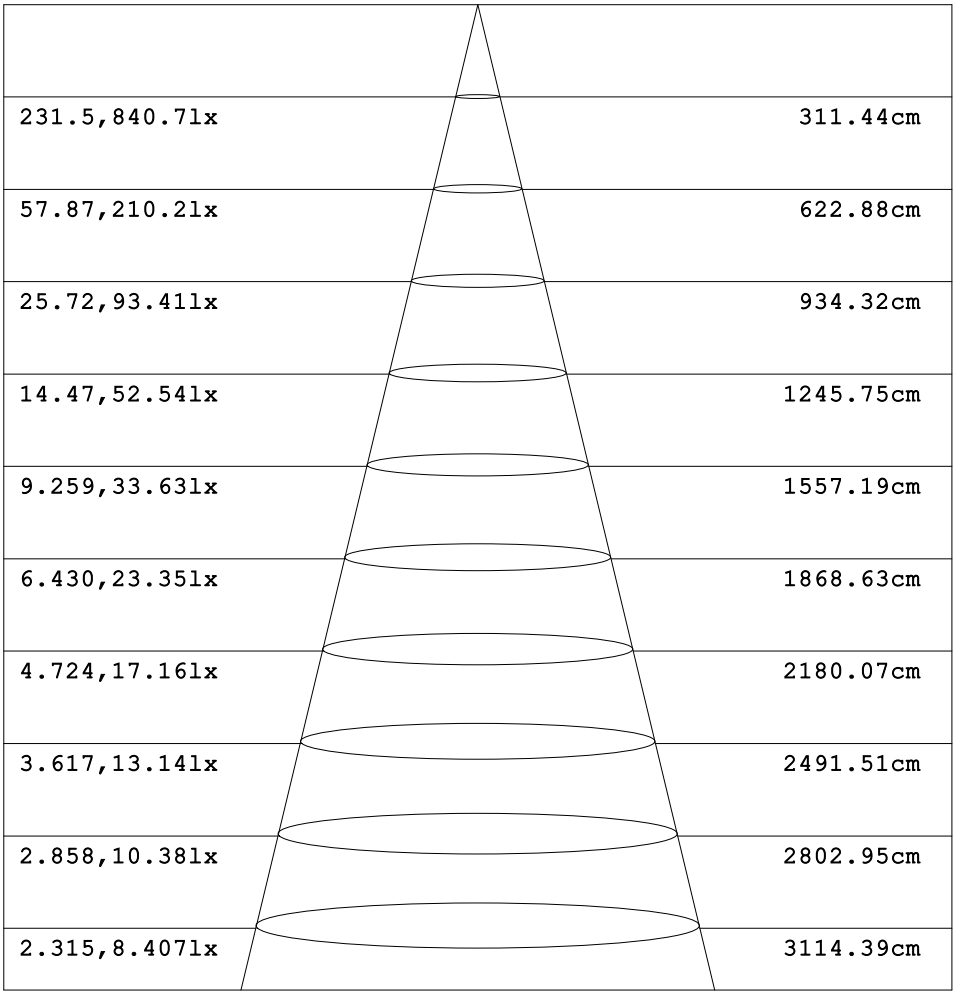

Height	Eavg,Emax	Angle:114.58deg	Diameter
1m	231.5,840.7lx		311.44cm
2m	57.87,210.2lx		622.88cm
3m	25.72,93.41lx		934.32cm
4m	14.47,52.54lx		1245.75cm
5m	9.259,33.63lx		1557.19cm
6m	6.430,23.35lx		1868.63cm
7m	4.724,17.16lx		2180.07cm
8m	3.617,13.14lx		2491.51cm
9m	2.858,10.38lx		2802.95cm
10m	2.315,8.407lx		3114.39cm

Note:The Curves indicate the illuminated area and the average illumination when the luminaire is at different distance.

C Range: 0 - 360DEG
C Interval: 22.5DEG
Test Speed: MEDIUM
Temperature:25.3℃
Operators:
Test Date:17 April 2025

γ Range: 0 - 180DEG
γ Interval: 1.0DEG
Test System:EVERFINE GO-2000B_V1 SYSTEM V2.00.458
Humidity:65.0%
Test Distance:8.050m [K=1.0000]
Remarks:

ISOLUX DIAGRAM

Test:U:119.89V I:0.3165A P:37.739W PF:0.9945 Freq:60.01Hz UTHDi:0.25% ITHDi:1.73% KDisp:1.000 Lamp Flux:2615.23x1 lm		
NAME: 线条灯36W	TYPE: 线条灯36W	WEIGHT:
SPEC.: 120~277V	DIM.: 0.23*0.32	SERIAL No.: 01
MFR.:	SUR.: 0.2*0.29	Shielding Angle:

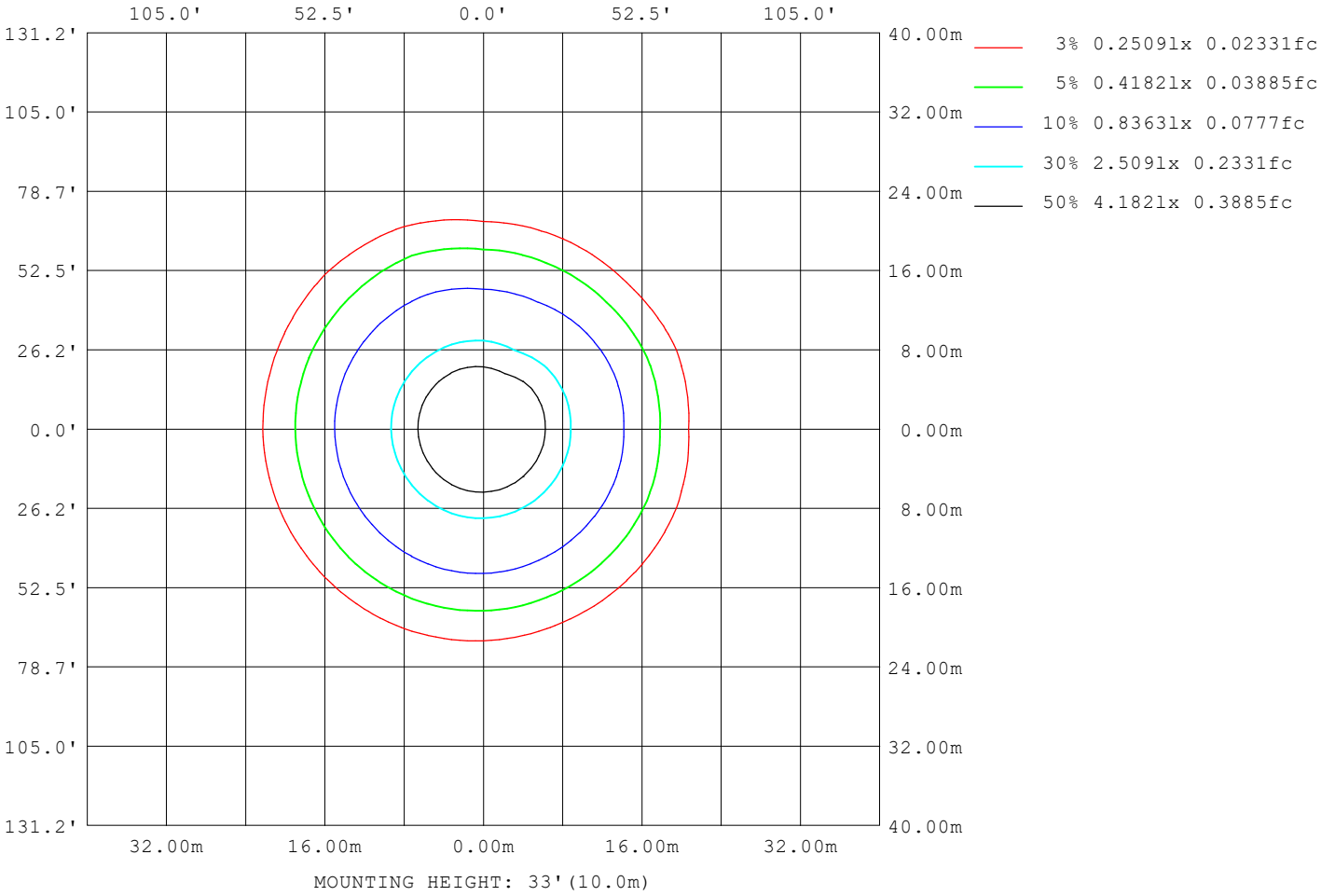

C Range: 0 - 360DEG
C Interval: 22.5DEG
Test Speed: MEDIUM
Temperature:25.3℃
Operators:
Test Date:17 April 2025

γ Range: 0 - 180DEG
γ Interval: 1.0DEG
Test System:EVERFINE GO-2000B_V1 SYSTEM V2.00.458
Humidity:65.0%
Test Distance:8.050m [K=1.0000]
Remarks:

LED Avg.L Report

Test:U:119.89V I:0.3165A P:37.739W PF:0.9945 Freq:60.01Hz UTHDi:0.25% ITHDi:1.73% KDisp:1.000 Lamp Flux:2615.23x1 lm		
NAME: 线条灯36W	TYPE: 线条灯36W	WEIGHT:
SPEC.: 120~277V	DIM.: 0.23*0.32	SERIAL No.: 01
MFR.:	SUR.: 0.2*0.29	Shielding Angle:

AvgL	cd/m2
L_0~180(65)av	13669
L_0~180(75)av	12682
L_0~180(85)av	12684
L_90~270(65)av	13030
L_90~270(75)av	10806
L_90~270(85)av	9088
L_45(65)av	13583
L_45(75)av	11904
L_45(85)av	10918

Standard: GB/T 29293-2012

C Range: 0 - 360DEG
C Interval: 22.5DEG
Test Speed: MEDIUM
Temperature:25.3℃
Operators:
Test Date:17 April 2025

γ Range: 0 - 180DEG
γ Interval: 1.0DEG
Test System:EVERFINE GO-2000B_V1 SYSTEM V2.00.458
Humidity:65.0%
Test Distance:8.050m [K=1.0000]
Remarks:

Planar Illuminance Curve

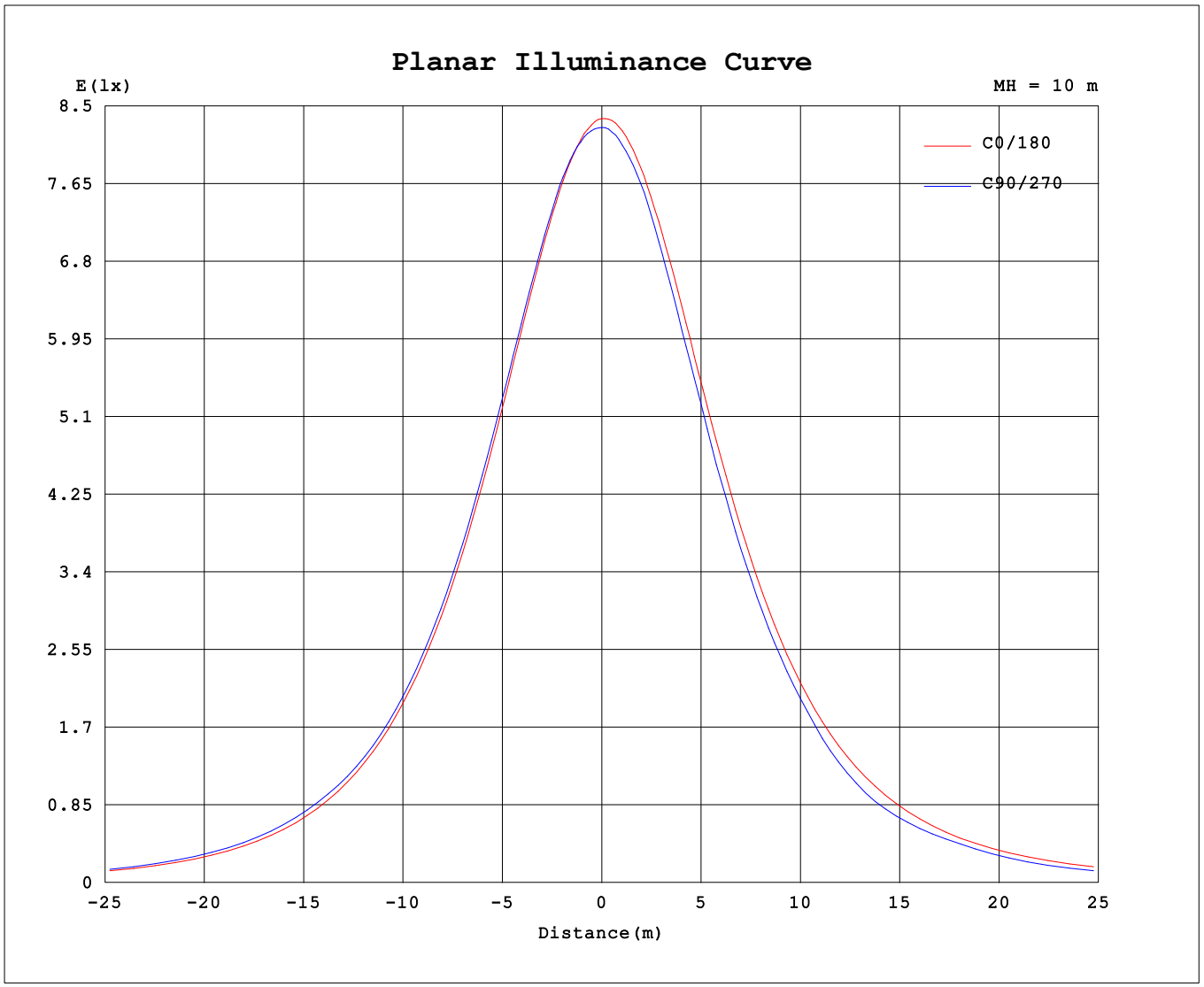

C Range: 0 - 360DEG
C Interval: 22.5DEG
Test Speed: MEDIUM
Temperature:25.3℃
Operators:
Test Date:17 April 2025

γ Range: 0 - 180DEG
γ Interval: 1.0DEG
Test System:EVERFINE GO-2000B_V1 SYSTEM V2.00.458
Humidity:65.0%
Test Distance:8.050m [K=1.0000]
Remarks:

LUMINOUS DISTRIBUTION INTENSITY DATA

Test:U:119.89V I:0.3165A P:37.739W PF:0.9945 Freq:60.01Hz UTHDi:0.25% ITHDi:1.73% KDisp:1.000 Lamp Flux:2615.23x1 lm		
NAME: 线条灯36W	TYPE: 线条灯36W	WEIGHT:
SPEC.: 120~277V	DIM.: 0.23*0.32	SERIAL No.: 01
MFR.:	SUR.: 0.2*0.29	Shielding Angle:

Table--1 UNIT: cd

γ (DEG) \ C(DEG)	0	22.5	45	67.5	90	112.5	135	157.5	180	202.5	225	247.5	270	292.5	315	337.5			
0	837	837	837	837	837	837	837	837	837	837	837	837	837	837	837	837			
5	830	831	832	832	836	835	837	836	837	837	837	836	833	834	833	831			
10	817	817	818	818	829	824	827	830	831	831	830	828	823	823	822	820			
15	796	797	796	797	813	806	811	815	818	820	817	815	806	806	804	802			
20	770	771	768	772	789	784	788	794	800	801	799	796	781	780	780	777			
25	738	738	736	741	760	756	761	768	775	776	774	766	752	725	750	746			
30	701	700	698	706	725	723	729	735	745	746	743	732	713	669	713	710			
35	658	656	656	664	683	684	691	698	709	711	704	692	674	613	667	668			
40	609	608	609	617	638	638	647	655	667	669	660	644	629	572	615	620			
45	556	556	556	565	584	588	598	607	620	622	611	592	576	528	560	566			
50	498	500	500	507	528	533	545	553	567	568	556	535	505	470	498	509			
55	433	440	440	450	473	478	486	495	508	509	496	479	433	413	435	446			
60	366	377	378	386	406	414	426	432	444	445	434	432	389	367	368	379			
65	295	311	310	312	331	342	354	366	376	377	377	364	308	295	290	312			
70	221	243	236	236	253	269	278	294	304	306	305	272	221	210	199	245			
75	150	168	163	163	175	189	203	214	231	235	216	187	149	140	133	169			
80	84.5	97.3	95.2	95.9	103	119	129	140	159	153	137	115	89.2	83.4	79.0	93.9			
85	35.7	40.4	42.1	42.5	46.1	63.0	67.7	77.4	92.5	82.0	74.3	58.6	45.8	37.0	36.7	37.9			
90	9.71	14.0	16.3	16.4	17.6	29.5	32.8	41.5	46.8	38.0	28.8	33.0	20.1	15.2	15.6	13.1			
95	8.86	12.4	15.5	16.4	17.3	23.3	31.8	34.9	15.6	34.5	18.2	27.3	16.5	14.7	15.8	12.9			
100	8.79	12.1	15.2	16.8	17.2	15.4	23.1	23.6	8.03	32.5	17.9	22.7	15.4	14.9	15.7	13.2			
105	8.71	12.0	15.1	17.1	16.5	13.0	21.3	11.2	8.33	15.6	22.0	18.9	15.3	15.8	15.5	13.4			
110	8.72	11.9	15.4	16.1	16.6	13.9	8.98	8.83	8.61	8.67	8.67	13.6	15.7	16.9	15.2	13.5			
115	8.98	12.0	16.2	15.7	17.4	14.4	8.93	9.13	8.91	8.96	8.94	11.1	16.5	17.5	15.4	14.1			
120	9.36	12.0	16.8	15.8	17.7	10.5	9.24	9.45	9.19	9.25	9.22	9.26	17.5	16.9	15.9	14.5			
125	9.75	12.0	17.4	16.3	16.7	9.32	9.58	9.82	9.49	9.54	9.50	9.56	17.3	16.4	16.7	14.7			
130	10.1	12.0	17.6	16.8	16.5	9.60	9.91	10.3	9.79	9.85	9.80	9.86	17.0	16.4	17.4	14.7			
135	10.5	11.9	17.4	17.5	16.5	9.92	10.2	10.8	10.1	10.2	10.1	10.2	16.7	16.8	18.0	14.5			
140	10.9	11.9	16.9	17.9	16.8	10.3	10.6	11.4	10.5	10.5	10.5	10.5	15.4	17.3	18.2	14.1			
145	11.5	12.1	16.1	18.0	17.1	10.7	11.0	11.9	11.0	10.9	10.8	10.9	13.3	17.7	18.0	13.8			
150	11.9	12.5	15.1	17.5	17.3	11.1	11.6	13.5	11.4	12.1	11.2	11.4	12.8	17.9	17.4	13.4			
155	12.3	12.8	14.3	16.6	17.2	11.7	12.3	13.7	11.9	12.3	13.5	11.8	12.9	17.5	16.4	13.2			
160	12.7	13.1	13.7	15.5	16.6	12.4	14.6	13.9	12.3	12.6	13.5	12.2	13.2	16.8	15.4	13.4			
165	13.0	13.3	13.5	14.5	15.7	13.0	14.5	14.1	12.7	12.9	13.4	13.0	13.5	15.7	14.6	13.8			
170	13.3	13.5	13.5	13.9	14.9	13.5	14.5	14.3	13.1	13.2	13.3	13.7	13.7	14.7	14.2	14.1			
175	13.5	13.6	13.5	13.8	14.3	14.3	14.5	14.5	13.4	13.4	13.4	13.5	14.0	14.5	14.4	14.3			
180	13.5	13.6	13.5	13.7	14.2	14.4	14.5	14.5	13.5	13.6	13.5	13.7	14.1	14.4	14.5	14.5			

C Range: 0 - 360DEG
C Interval: 22.5DEG
Test Speed: MEDIUM
Temperature:25.3℃
Operators:
Test Date:17 April 2025

γ Range: 0 - 180DEG
γ Interval: 1.0DEG
Test System:EVERFINE GO-2000B_V1 SYSTEM V2.00.458
Humidity:65.0%
Test Distance:8.050m [K=1.0000]
Remarks:

DEPARTMENT OF PUBLIC WORKS
ENGINEERING DIVISION

TODD J. ZILINCIK, P.E.
CITY ENGINEER

DAVID W. LEAR, P.E.
ASST. CITY ENGINEER

MAUREEN MILLER BROSNAN
MAYOR

DONALD R ROHRAFF
DIRECTOR OF PUBLIC WORKS

12973 FARMINGTON ROAD
LIVONIA, MICHIGAN 48150
(734) 466-2571
FAX: (734) 466-2195

April 3, 2025

Mr. Mark Taormina
Planning and Economic Development Director
City of Livonia

Re: Petition 2025-03-08-03 – Johnny's Car Wash (#30207 Plymouth Road)

Dear Mr. Taormina:

In accordance with your request, the Engineering Division has reviewed the above referenced petition. We have no objections to the proposed project at this time, but would like to note the following items:

1. The subject parcel is assigned the address of **#30207 Plymouth Road**. Should additional addresses be needed, the Owner will need to contact this Department once approvals have been obtained.

2. The existing parcel is currently serviced by public sanitary sewer and water main, as well as private storm sewer. The Developer will need to submit full Engineering drawings and calculations to this Department for permitting once approvals for the site plans have been received. Based on the submitted drawings, we have the following comments:

   i) Sanitary Sewer: The drawings do not include a basis of design for the proposed sanitary sewer outlet, so we are unable to determine if capacity in the existing system is available. The developer will be required to clean and televise the existing sanitary sewer lead if it is to be re-used. If the condition is not sufficient for re-use, a new service will need to be installed to the parcel.
   ii) Water Main: The drawings indicate that the existing water service will be re-used for the proposed car wash. The developer will need to confirm that the existing service is sufficient for the proposed usage.
   iii) Storm Sewer: The drawings indicate that the existing private storm system will remain in place and that all site grading will utilize existing structures.

Detention was previously provided for the parcel, so no additional detention will be required.

3. Any disturbances with the Plymouth Road right-of-way will require permits through the Michigan Department of Transportation, including excavation and sidewalk removals and placements.

Should you have any additional questions on this matter, please feel free to contact myself at (734) 466-2608 or the City Engineer, Mr. Todd Zilincik at (734) 466-2561. If you would prefer, you can e-mail either of us at dlear@livonia.gov or tzilincik@livonia.gov.

Sincerely,

David W. Lear, P.E.
Assistant City Engineer

cc: 2025 Petition File

DEPARTMENT OF PUBLIC SAFETY
LIVONIA FIRE & RESCUE

ROBERT JENNISON
FIRE CHIEF

MAUREEN MILLER BROSNAN
MAYOR

14910 FARMINGTON ROAD
LIVONIA, MICHIGAN 48154-5419
734-466-2444
734-466-2082 fax

DATE: April 25, 2025

TO: Mark Taormina, Planning & Economic Development Director
FROM: Livonia Fire Prevention Division

SUBJECT: Petition #2025-03-08-03 Johnny's car wash 30207 Plymouth Rd.

This office has reviewed the site plan submitted in connection with a request to construct a commercial building on property located at the above referenced address.

We have no objections to this proposal.

A further detailed plan review will take place when this division receives an official plan set.

Sincerely,

Brian R. Kukla

Brian R. Kukla
Fire Marshal

INSPECTION DEPARTMENT

BUILDING
HEATING
PLUMBING
ELECTRICAL
ZONING
ENVIRONMENTAL PROTECTION
ORDINANCE ENFORCEMENT

MAUREEN MILLER BROSNAN
MAYOR

JEROME A. HANNA
DIRECTOR

33000 CIVIC CENTER DRIVE
LIVONIA, MICHIGAN 48154-3097
(734) 466-2580
FAX: (734) 466-2095

Date: April 11, 2025

To: Mark Taormina

From: Jerome Hanna

RE: Petition 2025-03-08-03 30207 Plymouth Road

Pursuant to your request, the above-referenced Petition has been reviewed.

This Department has no objections to this Petition.

I trust this provides the requested information.

Jerome Hanna
Jerome Hanna
Director of Inspection

DEPARTMENT OF PUBLIC SAFETY
DIVISION OF POLICE

THOMAS GORALSKI
CHIEF OF POLICE

MAUREEN MILLER BROSNAN
MAYOR

15050 Farmington Road
Livonia, Michigan 48154-5499
(734) 466-2470
FAX: (734) 261-2265

March 25th 2025

Mr. Scott Miller
City of Livonia Planning Dept
33000 Civic Center Drive
Livonia, MI 48154

Re: Petitions 2025-03-08-03 – 30207 Plymouth Road

Mr. Miller,

I have reviewed the plans in connection with the petition. I have no objections to the proposals.

Please feel free to contact me, should you have any questions.

Sincerely,

FOR THE CHIEF OF POLICE,

Paul Walters, Sergeant
Traffic Bureau
(734) 466-2107

NEW DATA RECEIVED FOR THE
REGULAR MEETING OF JUNE 2, 2025

From: noreply@civicplus.com
To: CityCouncil
Subject: Online Form Submittal: City Council Inquiries
Date: Tuesday, May 20, 2025 11:36:41 AM

City Council Inquiries

This form is for any questions, comments, or concerns you may have for the City in regards to city council meetings or other city council inquiries. If you leave contact information, the City will reply within 2 business days. If this is an emergency, please dial 9-1-1.

First Name	Lynn
Last Name	Mills
Address	38415 Plymouth Road
Email Address	lynnspl81@aol.com
Phone Number	7345161948
Topic	Other City Council Inquiry
Date of Issue	5/20/2025
Attachment (Optional)	*Field not completed.*
Comments	Please vote down item # 11 from the May 19, 2025 Study meeting. The Mayor's request for $78 K for a project that hasn't been approved of by the voters is just plain wasteful. Indicative of the way the City has been run. Thank you for reading this.

Email not displaying correctly? View it in your browser.

LETTER TO THE LIVONIA CITY COUNCIL

11.

Mayor's Office
April 11, 2025

MEETING DATE	PRESENTED BY
S051925/R060225	Carter Fisher, City Attorney

AGENDA ITEM

AWARD OF CONTRACT: Office of the Mayor, re: pre-construction services in a not-to-exceed amount of $78,312.00 for the new Police station facilities, from budgeted funds.

BACKGROUND DETAILS

As part of the process of building a new Police Station as part of the Civic Center Project, the City has requested bids from various contracting firms for construction management services. The City has selected Granger as the most qualified candidate to provide the Construction Management services for Police Station construction.

The Construction Management Services for the new Police facilities play a critical role in ensuring the scope of work reflected in the design/construction documents aligns with the defined project budget; expediting material procurement, and ensuring construction is completed within the schedule parameters. The Construction Manager will be responsible for bidding out various building trades and contracting with appropriate subcontractors to ensure that the Police Station is built to the specifications outlined by the project architect, as well as the schedule and project budget dictated by the City. The Construction Manager will interface with the architect to ensure that the project drawings are buildable, that there are minimal errors in design that could cause increased costs during construction, and to offer suggestions on value engineering that will ultimately provide project savings. In conjunction with PMR and the City's leadership staff, the Construction Manager will manage all aspects of the build out of the Police Station premises. The initial contract amount for pre-construction services will be $78,312.00. Once a Guaranteed Maximum Price (GMP) has been agreed to for the build out of the Police Facilities, the Construction Manager's construction management fee will be formalized through an amendment to this agreement; Granger has agreed to a construction management fee that is equal to 7.03% of the GMP.

PREFERRED COUNCIL RECOMMENDATION/RESOLUTION (Please complete this field. Attachments are not to be used in lieu of the recommendation)

RESOLVED, that having considered correspondence from Plante Moran Realpoint, LLC (“PMR”), dated April 3, 2025, submitted pursuant to PMR’s assignment to assist the City in selecting a firm to perform construction management services for the Livonia Police Station Facilities, setting forth the process by which a Project Team consisting of representatives of PMR, and the City’s administration, staff and legal counsel posted a request for proposal and evaluated proposals

received, including interviews with short-listed firms, and now recommends awarding the contract for construction management services to Granger for the pre-construction services which are to be priced at a value not to exceed $78,312.00, THE COUNCIL DOES HEREBY APPROVE THE RECOMMENDATION AND AUTHORIZES THE MAYOR AND CITY CLERK, FOR AND ON BEHALF OF THE CITY OF LIVONIA, TO EXECUTE A CONTRACT BETWEEN THE CITY OF LIVONIA AND GRANGER, 39475 W 13 MILE RD #100, NOVI, MI 48377, SUBJECT TO APPROVAL AS TO FORM AND SUBSTANCE BY THE CITY'S DEPARTMENT OF LAW, IN AN AGGREGATE AMOUNT OF FEES AND REIMBURSEABLES NOT TO EXCEED $78,312.00; FURTHER, the Council does hereby authorize an expenditure of such amounts for such purposes as incurred from Account No. 418-000-813-000 (Professional Fees).

SPECIFIC NAME OF PRODUCT AND NUMBER TO BE PURCHASED (if more than one)

N/A

CONTRACT: Amount and/or purchase price and length of contract (with dates if applicable)

$78,312.00

DETAILED WORK BEING PERFORMED

Construction Management Services

FISCAL CONSIDERATIONS (Amount requested and Account(s) used. If applicable, Grant Funding information)

$78,312.00 Account No: 418-000-813-000 (Professional Fees)

ACCEPTANCE OF BID (Please detail the following: Why accepted, why not lowest bidder, company name, contact person, full address)

N/A

REASON TO WAIVE BID PROCESS (Emergency, Professional services, No advantage to City and why, Consortium package, etc): N/A

ATTACHMENTS

None

APPROVED BY

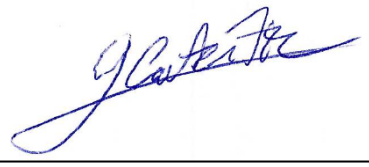

Date: April 11, 2025

Carter Fisher, City Attorney

Debra Peck Lichtenberg, CPA, Finance Director

Date: April 15, 2025

Maureen Miller Brosnan, Mayor

Date: April 17, 2025

Plante Moran Realpoint
3000 Town Center, Suite 100
Southfield, MI 48075
Tel: 248.223.3500 | Fax: 248.223.3150
pmrealpoint.com

April 3, 2025

Ms. Maureen Miller Brosnan
Mayor
City of Livonia
3300 Civic Center Dr., Livonia, MI 48154

RE: Livonia City Center – New Police Station Facility
Construction Management Services Contract Award Recommendation

Dear Ms. Miller Brosnan:

Please find in this letter an update from Plante Moran Realpoint (PMR) regarding our assignment to assist and advise the City of Livonia (COL) in selecting a professional Construction Management (CM) firm for the new Police Station facility. This update represents the mutual efforts of PMR, COL administration, staff, and legal counsel (the Project Team) to identify, evaluate, and recommend a firm for the new Police Station facility.

The Construction Management Services for the new Police Station facility play a critical role in ensuring the scope of work reflected in the design/construction documents aligns with the defined project budget; expediting material procurement, and ensuring construction is completed within the schedule parameters. It is also paramount to begin this process quickly to meet the program's overall timeline and budget.

SELECTION PROCESS

In February of 2025, the Project Team drafted a Request for Proposal (RFP) outlining the Construction Managers Scope of Work and project parameters. This RFP was reviewed on several occasions in detail by the project team. PMR reached out to over a dozen Construction Management firms to garner interest in the RFP.

On March 4, 2025, the COL formally posted the RFP documents to MITN. The Project Team conducted a pre-bid meeting on March 7, 2025; which ten (10) firms participated in. After receiving proposals from eight (8) firms on March 21, 2025, the Project Team evaluated them over the ensuing days.

The Project Team utilized a criteria-based selection (CBS) process to evaluate each firm's Proposal. The CBS process used pre-established and weighted criteria to evaluate the proposals and

objectively shortlist three (3) firms to interview. Selection criteria included firm's experience as related to similar projects, firm's proposed team as related to similar projects, proposed fees/costs, Experience Modification Rating, and project approach.

The Project Team conducted interviews with the three (3) shortlisted firms on March 31, 2025. The selection committee consisted of staff from PMR as well as Mayor Maureen Miller Brosnan, Dave Varga, Chief Thomas Goralski, Captain Eric Marcotte and Council member Scott Morgan. Upon completion of the interviews and after subsequent discussion, the Project Team completed the CBS scoring process.

This recommendation is based on the fact that the firm achieved the highest CBS score for the proposed Project. This score was achieved due to the firm's experience, team experience, approach to completing the project on schedule and within budget, and strong presentation/interview.

RECOMMENDATION

Based on the information noted above, the Project Team recommends awarding the contract for Construction Management services for the new Police Station Facility to **Granger Construction**, pending final review of terms by legal counsel.

The total contract award recommendation is **$78,312** and is further defined as follows:

$	75,812	Preconstruction Services – Personnel Costs
$	2,500	Preconstruction Services – Reimbursable Expenses

Construction Services Personnel Costs and Reimbursable Expenses will be finalized and submitted for council's review upon public bidding of the hard construction and completion of the Guaranteed Maximum Price (GMP). The Construction Manager's overhead and profit will be 2.10% of the cost of the work. The CM fee will be a percentage of the Cost of the Work as defined in the RFP. The reimbursables are a not-to-exceed amount and will be billed as incurred.

If you have any questions regarding the above information, please feel free to contact me at (248) 227-4691 or rick.erickson@plantemoran.com. The Project Team is also available at the COL's convenience to answer any questions.

Sincerely,

Rick Erickson, AIA
Plante Moran Realpoint

DRAFT

AIA® Document A133® – 2019

Standard Form of Agreement Between Owner and Construction Manager as Constructor where the basis of payment is the Cost of the Work Plus a Fee with a Guaranteed Maximum Price

AGREEMENT made as of the «Twenty Ninth» day of «April» in the year «Two Thousand Twenty Five.»
(In words, indicate day, month, and year.)

BETWEEN THE OWNER:
(Name, legal status and address)

City of Livonia
33000 Civic Center Drive
Livonia, Michigan 48154

and THE CONSTRUCTION MANAGER (also referred to as the "CONTRACTOR" herein):
(Name, legal status and address)

«Granger Construction Company »« »
6267 Aurelius Rd.
Lansing, Michigan 48911 »
«(517) 393-1670 »

for the following PROJECT:
(Name and location or address)

Livonia City Center Program
«New Police Station Facility»

THE ARCHITECT:
(Name, legal status and address)

«Hobbs + Black Associates, Inc. »« »
«100 N State Street
Ann Arbor, Michigan 48104 »
«(734) 663-4189 »

The Owner and Construction Manager agree as follows.

ADDITIONS AND DELETIONS: The author of this document has added information needed for its completion. The author may also have revised the text of the original AIA standard form. An *Additions and Deletions Report* that notes added information as well as revisions to the standard form text is available from the author and should be reviewed.

This document has important legal consequences. Consultation with an attorney is encouraged with respect to its completion or modification.

AIA Document A201™–2017, General Conditions of the Contract for Construction, is adopted in this document by reference. Do not use with other general conditions unless this document is modified.

ELECTRONIC COPYING of any portion of this AIA® Document to another electronic file is prohibited and constitutes a violation of copyright laws as set forth in the footer of this document.

AIA Document A133 – 2019. Copyright © 1991, 2003, 2009, and 2019. All rights reserved. "The American Institute of Architects," "American Institute of Architects," "AIA," the AIA Logo, and "AIA Contract Documents" are trademarks of The American Institute of Architects. This draft was produced at 13:05:08 ET on 03/04/2025 under Order No.3104239075 which expires on 06/30/2025, is not for resale, is licensed for one-time use only, and may only be used in accordance with the AIA Contract Documents® Terms of Service. To report copyright violations, e-mail docinfo@aiacontracts.com.
User Notes: (1430878512)

TABLE OF ARTICLES

1 INITIAL INFORMATION

2 GENERAL PROVISIONS

3 CONSTRUCTION MANAGER'S RESPONSIBILITIES

4 OWNER'S RESPONSIBILITIES

5 COMPENSATION AND PAYMENTS FOR PRECONSTRUCTION PHASE SERVICES

6 COMPENSATION FOR CONSTRUCTION PHASE SERVICES

7 COST OF THE WORK FOR CONSTRUCTION PHASE

8 DISCOUNTS, REBATES, AND REFUNDS

9 SUBCONTRACTS AND OTHER AGREEMENTS

10 ACCOUNTING RECORDS

11 PAYMENTS FOR CONSTRUCTION PHASE SERVICES

12 DISPUTE RESOLUTION

13 TERMINATION OR SUSPENSION

14 MISCELLANEOUS PROVISIONS

15 SCOPE OF THE AGREEMENT

EXHIBIT A GUARANTEED MAXIMUM PRICE AMENDMENT

EXHIBIT B INSURANCE AND BONDS

DRAFT

ARTICLE 1 INITIAL INFORMATION

§ 1.1 This Agreement is based on the Initial Information set forth in this Section 1.1.
(For each item in this section, insert the information or a statement such as "not applicable" or "unknown at time of execution.")

§ 1.1.1 The Owner's program for the Project, as described in Section 4.1.1:
(Insert the Owner's program, identify documentation that establishes the Owner's program, or state the manner in which the program will be developed.)

The Police Station Facility will encompass approximately 67,800 square feet, as detailed in the Preliminary Space and Site Program, which is included in the Owner's Request for Proposal and attached hereto as Exhibit J.

§ 1.1.2 The Project's physical characteristics:
(Identify or describe pertinent information about the Project's physical characteristics, such as size; location; dimensions; geotechnical reports; site boundaries; topographic surveys; traffic and utility studies; availability of public and private utilities and services; legal description of the site, etc.)

«The New Police Station Facility will be located in close proximity to the existing 16th District Court located at 32765 Five Mile Road in Livonia, Michigan 48154. The exact location will be determined upon completion of the master plan. »

AIA Document A133 – 2019. Copyright © 1991, 2003, 2009, and 2019. All rights reserved. "The American Institute of Architects," "American Institute of Architects," "AIA," the AIA Logo, and "AIA Contract Documents" are trademarks of The American Institute of Architects. This draft was produced at 13:05:08 ET on 03/04/2025 under Order No.3104239075 which expires on 06/30/2025, is not for resale, is licensed for one-time use only, and may only be used in accordance with the AIA Contract Documents® Terms of Service. To report copyright violations, e-mail docinfo@aiacontracts.com.
User Notes: (1430878512)

§ 1.1.3 The Owner's anticipated budget for the Project, inclusive of all hard costs and soft costs (whether by the Construction Manager or the Owner's separate contractors), fees, financing costs, FF&E, and other related costs, is as follows:
(Provide total and, if known, a line item breakdown.)

The New Police Station Facility's Project Budget is Forty Six Million Dollars ($46,000,000);
anticipated hard costs for this Project, exclusive of soft costs, is Thirty Four Million Dollars ($34,000,000)

§ 1.1.4 Subject to amendment by the Owner, the Project's design milestone and anticipated construction milestone dates shall be as set forth in the Preliminary Major Milestone Schedule attached hereto as **Exhibit D**.

§ 1.1.5 The Owner's anticipated requirements for accelerated or fast-track scheduling, or phased construction, are set forth below:
(Identify any requirements for fast-track scheduling or phased construction.)

«The Owner may require the Project to be designed and bid in multiple bid packages.« »

§ 1.1.6 The Owner's anticipated Sustainable Objective for the Project:
(Identify and describe the Owner's Sustainable Objective for the Project, if any.)

«Not applicable.« »

§ 1.1.6.1 If the Owner identifies a Sustainable Objective, the Owner and Construction Manager shall complete and incorporate AIA Document E234™–2019, Sustainable Projects Exhibit, Construction Manager as Constructor Edition, into this Agreement to define the terms, conditions and services related to the Owner's Sustainable Objective. If E234–2019 is incorporated into this Agreement, the Owner and Construction Manager shall incorporate the completed E234–2019 into the agreements with the consultants and contractors performing services or Work in any way associated with the Sustainable Objective.

§ 1.1.7 Other Project information:
(Identify special characteristics or needs of the Project not provided elsewhere.)

«Not applicable.« »

§ 1.1.8 The Owner identifies the following representatives:

.1 Owner's Designated Representative: The Owner identified the following individual as its Owner's Designated Representative in accordance with Section 4.2:
(List name, address, and other contact information.)

«Dave Varga, Chief of Staff»
City of Livonia
33000 Civic Center Drive
Livonia, MI 48154

.2 Owner's Representative Consultant.
The Owner has engaged Plante Moran Realpoint, LLC as an Owner's Representative Consultant on the Project. The Construction Manager shall keep the Owner and the Owner's Representative Consultant informed in matters regarding the Project. Unless otherwise provided in this Agreement or specifically authorized by the Owner, the Owner's Representative Consultant is not authorized to commit the Owner in matters regarding changes in the Work, Construction Schedule, or grant approval on behalf of the Owner. The Owner and/or the Owner's Designated Representative have the sole right to make decisions in matters regarding the Project. The following individual, subject to change upon written notification to the Construction Manager, shall be primary contact for the Owner's Representative Consultant:

«Rick Erickson»

AIA Document A133 – 2019. Copyright © 1991, 2003, 2009, and 2019. All rights reserved. "The American Institute of Architects," "American Institute of Architects," "AIA," the AIA Logo, and "AIA Contract Documents" are trademarks of The American Institute of Architects. This draft was produced at 13:05:08 ET on 03/04/2025 under Order No.3104239075 which expires on 06/30/2025, is not for resale, is licensed for one-time use only, and may only be used in accordance with the AIA Contract Documents® Terms of Service. To report copyright violations, e-mail docinfo@aiacontracts.com.
User Notes: (1430878512)

Plante Moran Realpoint, LLC
3000 Town Center; Suite 100
Southfield, MI 48075
rick.erickson@plantemoran.com; (248) 227-4691

§ 1.1.9 The persons or entities, in addition to the Owner's representatives identified in Section 1.1.7 and Architect, who are required to review the Construction Manager's submittals to the Owner are as follows:
(List name, address and other contact information.)

«The City of Livonia Chief of Staff or their designee, the City of Livonia Planning and Economic Development Director, and the City of Livonia Director of Inspection. »

§ 1.1.10 The Owner anticipates retaining the following consultants and contractors:

.1 Geotechnical Engineer:

«To be determined. »

.2 Civil Engineer

Orchard, Hiltz, & McCliment Inc.
d/b/a OHM Advisors
34000 Plymouth Rd
Livonia, MI 48150

.3 Other, if any:
(List any other consultants and contractors retained by the Owner.)

Master Planning Consultant»
Harley Ellis Devereaux Corporation
123 West 5th Street
Royal Oak, MI 48067

«Survey & Traffic Consultant
«Spalding, DeDecker & Associates, Inc.»« »
«905 South Blvd East »
«Rochester Hills, MI 48307 »
»
«Wetland Consultant »
Brooks Williamson and Associates
42400 Grand River Ave., Ste. 200
Novi, MI 48375»

«Materials Testing Consultant - to be determined

Envelope/Roofing Consultant – to be determined

Technology Designer and Consultant
«Plante Moran, PLLC
3000 Town Center, Suite 100
Southfield, MI 48075»

§ 1.1.11 The Architect's representative:
(List name, address, and other contact information.)

«Martin Ruiter, RA, LEED AP, Senior Vice President »
«Hobbs + Black Associates, Inc. »« »
«100 N State Street

DRAFT

AIA Document A133 – 2019. Copyright © 1991, 2003, 2009, and 2019. All rights reserved. "The American Institute of Architects," "American Institute of Architects," "AIA," the AIA Logo, and "AIA Contract Documents" are trademarks of The American Institute of Architects. This draft was produced at 13:05:08 ET on 03/04/2025 under Order No.3104239075 which expires on 06/30/2025, is not for resale, is licensed for one-time use only, and may only be used in accordance with the AIA Contract Documents® Terms of Service. To report copyright violations, e-mail docinfo@aiacontracts.com.
User Notes: (1430878512)

Ann Arbor, MI 48104 »
«(734) 663-4189 »

§ 1.1.12 The Construction Manager identifies the following representative in accordance with Article 3. The Construction Manager's representative identified blow is authorized to act, and fully bind the Construction Manager and commit the Construction Manager's resources, on behalf of the Construction Manager with respect to the Project:
(List name, address, and other contact information.)

«Ben Schneider LEED AP, Project Executive »
«Granger Construction Company »« »
«1441 Brooklyn Street; Suite 400
Detroit, MI 48226 »
bschneider@grangerconstruction.com; (810) 602-1608

§ 1.1.13 The Construction Manager's key team members are:
(*List of key staff members assigned to the Project and their respective roles)*

Team Member Name	Assignment
Kyle Oberdorf,	Senior Project Manager
Kevin Bywalec,	Project Manager
Ron Schmidt,	Superintendent
Brian Ziemba,	Project Engineer

§ 1.1.13.1 The services of the Construction Manager's key team members are deemed to be personal in nature as to these key team members, and the continuity in the Project's team is valuable to the Owner. Therefore, the Construction Manager shall not substitute a key team member for convenience without the Owner's prior written approval which shall be at the Owner's sole discretion.

§ 1.1.13.1.1 reserved

§ 1.1.13.1.2 reserved

§ 1.1.13.2 If a key team member is substituted for any reason, the Owner shall have the right to interview and select alternate Team member(s) employed by the Construction Manager to replace the unavailable Team member. Construction Manager shall agree to provide the services of the alternate team member(s) selected by Owner.

§ 1.1.13.3 Substitution of any key team member for any reason shall not entitle the Construction Managers to an increase of the Contract Time, the Contract Sum, or the Guaranteed Maximum Price, however, where cost of the replacement key team members is less that key team member being replaced the Owner shall be entitled to a Change Order for a commensurate reduction in the Contract Sum or Guaranteed Maximum Price.

§ 1.1.14 Reserved.

§ 1.1.15 Other Initial Information on which this Agreement is based:
«Not applicable. »

§ 1.2 The Owner and Construction Manager may rely on the Initial Information. Both parties, however, recognize that such information may materially change and, when appropriate, the Owner and the Construction Manager may agree in writing to adjust the Project schedule, the Construction Manager's services, and the Construction Manager's compensation. The Owner may adjust the Owner's budget for the Guaranteed Maximum Price and the Owner's anticipated design and construction milestones, as necessary, to accommodate material changes in the Initial Information. Notwithstanding the foregoing, the Construction Manager acknowledges that the Initial Information regarding the Project provided by the Owner is preliminary, and that the Construction Manager's services necessarily include assisting the Owner and Architect in refining the parameters of the Project.

AIA Document A133 – 2019. Copyright © 1991, 2003, 2009, and 2019. All rights reserved. "The American Institute of Architects," "American Institute of Architects," "AIA," the AIA Logo, and "AIA Contract Documents" are trademarks of The American Institute of Architects. This draft was produced at 13:05:08 ET on 03/04/2025 under Order No.3104239075 which expires on 06/30/2025, is not for resale, is licensed for one-time use only, and may only be used in accordance with the AIA Contract Documents® Terms of Service. To report copyright violations, e-mail docinfo@aiacontracts.com.
User Notes: (1430878512)

§ 1.3 Neither the Owner's nor the Construction Manager's representative shall be changed without ten days' prior notice to the other party.

ARTICLE 2 GENERAL PROVISIONS

§ 2.1 The Contract Documents

The Contract Documents consist of this Agreement, Conditions of the Contract (General, Supplementary and other Conditions), Drawings, Specifications, Addenda issued prior to execution of this Agreement, other documents listed in this Agreement, and Modifications issued after execution of this Agreement, all of which form the Contract and are as fully a part of the Contract as if attached to this Agreement or repeated herein. Upon the Owner's acceptance of the Construction Manager's Guaranteed Maximum Price proposal, the Contract Documents will also include the documents described in Section 3.2.3 and identified in the Guaranteed Maximum Price Amendment and revisions prepared by the Architect and furnished by the Owner as described in Section 3.2.8. The Contract represents the entire and integrated agreement between the parties hereto and supersedes prior negotiations, representations or agreements, either written or oral. If anything in the other Contract Documents, other than a Modification, is inconsistent with this Agreement, this Agreement shall govern. An enumeration of the Contract Documents, other than a Modification, appears in Article 15.

§ 2.1.1 Defined Terms

Terms which are defined in the AIA Document A201™–2017, General Conditions of the Contract for Construction, as modified, shall have the same meaning when used in this Agreement or other Contract Documents.

§ 2.2 Relationship of the Parties

The Construction Manager accepts the relationship of trust and confidence established by this Agreement and covenants with the Owner to cooperate with the Architect and exercise the Construction Manager's best skill and judgment in furthering the interests of the Owner to furnish efficient construction administration, management services, and supervision; to furnish at all times an adequate supply of workers and materials; and to perform the Work in an expeditious and economical manner consistent with the Owner's interests. The Owner agrees to furnish or approve, in a timely manner, information required by the Construction Manager and to make payments to the Construction Manager in accordance with the requirements of the Contract Documents.

§ 2.3 General Conditions

The general conditions of the contract shall be as set forth in AIA Document A201–2017, as modified, which document is attached hereto and incorporated herein by reference. Reference in this Agreement to the AIA Document A201-2017 or the General Conditions of the contract shall mean the AIA Document A201-2017 as modified and attached hereto. The term "Contractor" as used in AIA Document A201–2017 shall mean the Construction Manager, and the term "Contract Sum," wherever used in AIA Document A201-2017 in reference to a limit of cost, shall mean the Guaranteed Maximum Price.

§ 2.4 Initial Engagement

Initial engagement of the Construction Manager is for Preconstruction Services only. In addition to any other rights of termination, the Owner reserves the unconditional right to, in its sole discretion, terminate this Agreement at the conclusion of Preconstruction Services and/or solicit proposals from other Construction Managers or contractors for construction of the Project. In the event of such termination by Owner, Owner's sole liability, pursuant to this Agreement or otherwise at law or in equity, shall be payment for Preconstruction Services actually performed.

ARTICLE 3 CONSTRUCTION MANAGER'S RESPONSIBILITIES

§ 3.1.1 The Construction Manager's Preconstruction Phase responsibilities are set forth in Sections 3.2 and 3.3, **Exhibit C**, and in the applicable provisions of A201-2017. The Construction Manager's Construction Phase responsibilities are set forth in Section 3.4. The Owner and Construction Manager may agree, in consultation with the Architect, for the Construction Phase to commence prior to completion of the Preconstruction Phase, in which case, both phases will proceed concurrently.

§ 3.1.2 In addition to the provisions stated within this Agreement, the Construction Manager shall provide constructability input on the Project; to monitor Project costs and to keep costs within established limitations; to schedule the Project efficiently for both design development and construction phases so that the Project will be ready for occupancy at the earliest possible date; and to review the design of the Project with the intent that the most efficient use of materials and methods will be employed to provide quality construction at the least cost.

AIA Document A133 – 2019. Copyright © 1991, 2003, 2009, and 2019. All rights reserved. "The American Institute of Architects," "American Institute of Architects," "AIA," the AIA Logo, and "AIA Contract Documents" are trademarks of The American Institute of Architects. This draft was produced at 13:05:08 ET on 03/04/2025 under Order No.3104239075 which expires on 06/30/2025, is not for resale, is licensed for one-time use only, and may only be used in accordance with the AIA Contract Documents® Terms of Service. To report copyright violations, e-mail docinfo@aiacontracts.com.
User Notes: (1430878512)

§ 3.1.3 The Construction Manager shall perform its Services and the Work with competence and care, using skill and diligence consistent with honesty, integrity, candor, and in the interests of the Owner, not the interests of its subcontractors, vendors, or suppliers. Unless specifically provided otherwise, the Owner and Architect shall be entitled to rely on, and shall not be responsible for, the accuracy, completeness, and timeliness of services and information furnished by the Construction Manager.

§ 3.1.4 The Construction Manager shall comply with Applicable laws relevant to its performance under this Contract, and with equal employment opportunity programs, and other programs as may be required by governmental and quasi-governmental authorities.

§ 3.1.5 The Construction Manager shall immediately notify the Owner in writing in the event of a potential or actual: (a) material change in ownership or structure of the Construction Manager; (b) intent to dissolve; (c) intent to otherwise cease active participation in the Project's local marketplace; or (d) any other change in the Construction Manager's circumstances that could reasonably give rise to concern on behalf of the Owner regarding the Construction Manager's ability or willingness to fulfill any of its obligations under this Agreement (collectively a "Material Change in Circumstances"). In the event of a Material Change in Circumstances, the Construction Manager shall provide any reasonable assurance or guarantee requested by Owner. Owner shall have the right to terminate this Agreement for cause in the event of a Material Change in Circumstances.

§ 3.2 Preconstruction Phase

§ 3.2.1 Extent of Responsibility

The Construction Manager shall exercise the utmost care in performing its Preconstruction Services. The Owner and Architect shall be entitled to rely on, and shall not be responsible for, the accuracy, completeness, and timeliness of services and information furnished by the Construction Manager. With the exception of Work for which the Contract Documents require the Construction Manager to design, the Construction Manager is not required to ascertain that the Drawings and Specifications are in accordance with applicable laws, statutes, ordinances, codes, rules and regulations, or lawful orders of public authorities, but the Construction Manager shall use its expertise to carefully review the Drawings and Specifications and shall promptly report to the Architect and Owner any nonconformity discovered by or made known to the Construction Manager as a request for information in such form as the Architect may require.

§ 3.2.2 The Construction Manager shall provide a preliminary evaluation of the Owner's program, schedule and construction budget requirements, each in terms of the other. By signing this Agreement, the Construction Manager certifies to the Owner that the Construction Manager has completed such a preliminary review of the Owner's Program, schedule, and Project budget requirements, and that the Owner's Program, schedule, and Project Budget requirements are reasonably achievable, each in terms of the other.

§ 3.2.3 Consultation

§ 3.2.3.1 As the Architect progresses through the Schematic Design, Design Development, and Construction Documents phases of the Project, the Construction Manager shall prepare and update, at appropriate intervals agreed to by the Owner, Construction Manager, and Architect, an evaluation of the Owner's program, schedule, and construction budget requirements, each in terms of the other. The Construction Manager shall also schedule and conduct meetings with the Architect and Owner to discuss such matters as procedures, progress, coordination, and scheduling of the Work.

§ 3.2.3.2 The Construction Manager shall advise the Owner and Architect on proposed site use and improvements, selection of materials, building systems, and equipment. The Construction Manager shall also provide recommendations to the Owner and Architect, consistent with the Project requirements, on site investigations, constructability; availability of materials and labor; time requirements for procurement, installation and construction; prefabrication; and factors related to construction cost including, but not limited to, costs of alternative designs or materials, preliminary budgets, life-cycle data, and possible cost reductions. The Construction Manager shall consult with the Architect regarding professional services to be provided by the Construction Manager during the Construction Phase.

§ 3.2.3.3 The Construction Manager shall collaborate with the Architect in establishing building information modeling and digital data protocols for the Project, using AIA Document E203™–2013, Building Information

AIA Document A133 – 2019. Copyright © 1991, 2003, 2009, and 2019. All rights reserved. "The American Institute of Architects," "American Institute of Architects," "AIA," the AIA Logo, and "AIA Contract Documents" are trademarks of The American Institute of Architects. This draft was produced at 13:05:08 ET on 03/04/2025 under Order No.3104239075 which expires on 06/30/2025, is not for resale, is licensed for one-time use only, and may only be used in accordance with the AIA Contract Documents® Terms of Service. To report copyright violations, e-mail docinfo@aiacontracts.com.
User Notes: (1430878512)

Modeling and Digital Data Exhibit, to establish the protocols for the development, use, transmission, and exchange of digital data.

§ 3.2.3.4 As the Architect progresses with the preparation of the Schematic Design, Design Development, and Construction Documents, the Construction Manager shall review all Drawings and Specifications, consult with the Owner and Architect and make recommendations:

- **.1** regarding the cost, constructability, and schedule;
- **.2** regarding equipment, materials, and services;
- **.3** to ensure that they contain provisions for all temporary facilities necessary to enable the Construction team to perform their Work, and provisions for all of the job site facilities necessary to manage, inspect, and supervise construction; and
- **.4** to the Owner and Architect regarding site condition investigation and reporting to identify conditions that may impact the design and performance of the Work. The Construction Manager shall manage the site condition investigation if directed to do so by the Owner.

§ 3.2.4 Project Schedule

When Project requirements in Section 4.1.1 have been sufficiently identified, the Construction Manager shall prepare and update a Project schedule for the Architect's review and the Owner's acceptance in accordance with **Exhibit D**.

§ 3.2.5 Phased Construction

The Construction Manager, in consultation with the Architect, shall provide recommendations with regard to accelerated or fast-track scheduling, procurement, and sequencing for phased construction. The Construction Manager shall take into consideration cost reductions, cost information, constructability, provisions for temporary facilities, and procurement and construction scheduling issues.

§ 3.2.6 Cost Estimates

§ 3.2.6.1 Based on the preliminary design and other design criteria prepared by the Architect, the Construction Manager shall prepare, for the Architect's review and the Owner's approval, preliminary estimates of the Cost of the Work or the cost of program requirements using area, volume, or similar conceptual estimating techniques as outlined in **Exhibit C**. If the Architect or Construction Manager suggests alternative materials and systems, the Construction Manager shall provide cost evaluations of those alternative materials and systems. The Construction Manager shall use its best professional judgment in preparing estimates of the Cost of the Work. The Construction Manager's estimate will include a narrative of the factors that may cause its estimates to vary from the lowest bona fide bids for the Work. The Construction Manager shall notify the Owner and Architect in writing in the event an estimate exceeds the Owner's current approved budget for any portion of the Cost of the Work and will assist the Owner and Architect in a value engineering processes to make recommendations for corrective action, including changes in Project scope and design.

§ 3.2.7 Subcontractors and Suppliers

§ 3.2.7.1 The Construction Manager shall provide a subcontracting plan, addressing the Owner's requirements, for the Owner's review and approval.

§ 3.2.7.2 The Construction Manager shall develop bidders' interest in the Project both informally during the early design phases and formally during the bidding phase. The Construction Manager shall conduct pre-bid conferences to inform prospective bidders of requirements and answer questions concerning the Project and bidding requirements. Pre-bid conferences will be coordinated with the Owner and Architect. The Construction Manager shall regularly report on its bidders' interest activities to the Owner.

§ 3.2.7.3 The processes described in Article 9 shall apply if bid packages will be issued during the Preconstruction Phase.

§ 3.2.8 Procurement

The Construction Manager shall prepare, for the Architect's review and the Owner's acceptance, a procurement schedule for items that must be ordered in advance of construction. The Construction Manager shall expedite and coordinate the ordering and delivery of materials that must be ordered in advance of construction. If the Owner agrees to procure any items prior to the establishment of the Guaranteed Maximum Price, the Owner shall procure

AIA Document A133 – 2019. Copyright © 1991, 2003, 2009, and 2019. All rights reserved. "The American Institute of Architects," "American Institute of Architects," "AIA," the AIA Logo, and "AIA Contract Documents" are trademarks of The American Institute of Architects. This draft was produced at 13:05:08 ET on 03/04/2025 under Order No.3104239075 which expires on 06/30/2025, is not for resale, is licensed for one-time use only, and may only be used in accordance with the AIA Contract Documents® Terms of Service. To report copyright violations, e-mail docinfo@aiacontracts.com.
User Notes: (1430878512)

the items on terms and conditions acceptable to the Construction Manager. Upon the establishment of the Guaranteed Maximum Price, the Owner shall assign all contracts for these items to the Construction Manager and the Construction Manager shall thereafter accept responsibility for them.

§ 3.2.8.1 The Owner's requirements for subcontractor procurement for the performance of the Work:
(List any Owner-specific requirements for subcontractor procurement.)

§ 3.2.8.2 The Construction Manager shall develop a competitive field of bidders and solicit competitive bids from qualified subcontractors, vendors, and suppliers in accordance with Article 9, Applicable Law, and the Owner's applicable procurement policies for all portions of the Work. In event of a conflict between the requirements of Article 9, Applicable Law, or the Owner's applicable procurement policies, Applicable Law will govern.

§ 3.2.8.3 The Construction Manager shall, after reviewing the bidding documents with the Architect and Owner, assemble bid data including copies of Drawings, Specifications, and Contract Documents, assist the Owner in formally advertising and issuing invitations for bid in order to obtain competitive bids on appropriate segments of construction, including procurement of equipment, materials, and supplies purchased and incorporated in the Work.

§ 3.2.8.4 The Construction Manager or a related party, as defined in Section 7.8.1, may, with the Owner's prior approval, participate in the competitive bidding for any bid package "Self-performed Trade Work" provided that:

- **.1** The Construction Manager notifies the Owner in writing prior to publishing bid documents so that appropriate adjustments, as deemed necessary by the Owner, to the instructions to bidders may be made;
- **.2** Self-perform Trade Work shall be procured with the utmost care as not to alienate other trade subcontractors or in any way limit receipt adequate number of bids in the proposed bid category;
- **.3** The bidding Subcontractor entity conforms to all requirements of the instructions to bidders, including but not limited to obtaining information and clarifications regarding the scope of Work through the formal RFI process; and
- **.4** Where permitted by Applicable Law, the Owner will receive the Self-performed Trade Work bids directly and 24 hours prior to the otherwise stated bid due date.
- **.5** The Construction Manager's or a related party's participation in the competitive bidding process shall not relieve the Construction Manager of any obligation under the Contract Documents including, but not limited to, the Construction Manager's responsibility that the bidding process conform to Applicable Law and the Owner's applicable procurement policies.

§ 3.2.8.5 Awards of all contracts after evaluation and recommendation by the Construction Manager and concurrence of the Architect shall be made upon the Owner's consent. This shall include review and objective opinion of self-perform trade work bid categories by the Construction Manager. The Architect and/or Owner shall attend all scope review meetings for all proposing firms of the self-performed trade bid category. Consent by the Owner shall not relieve the Construction Manager of any of its responsibilities under the Contract Documents. Upon the Owner's consent, the Construction Manager shall award subcontracts to provide all labor and materials for the construction of the Project.

§ 3.2.8.6 The Construction Manager will not utilize, or solicit the participation of any subcontractors, vendors, or suppliers, in any early, accelerated, or similar payment program for the payment of any subcontractors, vendors, or suppliers on the Project without the prior written authorization of the Owner.

§ 3.2.9 Other Preconstruction Services

Insert a description of any other Preconstruction Phase services to be provided by the Construction Manager, or reference an exhibit attached to this document.
(Describe any other Preconstruction Phase services, such as providing cash flow projections, development of a project information management system, early selection or procurement of subcontractors, etc.)

See **Exhibit C** - Scope of Preconstruction Services.

AIA Document A133 – 2019. Copyright © 1991, 2003, 2009, and 2019. All rights reserved. "The American Institute of Architects," "American Institute of Architects," "AIA," the AIA Logo, and "AIA Contract Documents" are trademarks of The American Institute of Architects. This draft was produced at 13:05:08 ET on 03/04/2025 under Order No.3104239075 which expires on 06/30/2025, is not for resale, is licensed for one-time use only, and may only be used in accordance with the AIA Contract Documents® Terms of Service. To report copyright violations, e-mail docinfo@aiacontracts.com.
User Notes: (1430878512)

§ 3.3 Guaranteed Maximum Price (GMP) Proposal

§ 3.3.1 At a time to be mutually agreed upon by the Owner and the Construction Manager, the Construction Manager shall prepare a Guaranteed Maximum Price proposal for the Owner's and Architect's review, and the Owner's acceptance in a form substantially similar to the Guaranteed Maximum Price Amendment Form attached as **Exhibit A**. The Guaranteed Maximum Price in the proposal shall be the sum of the Construction Manager's estimate of the Cost of the Work, the Construction Manager's contingency described in Section 3.3.4, and the Construction Manager's Fee described in Section 6.1.2.

§ 3.3.2 To the extent that the Contract Documents are anticipated to require further development, the Guaranteed Maximum Price includes the costs attributable to such further development consistent with the Contract Documents and reasonably inferable therefrom. Such further development does not include changes in scope, systems, kinds and quality of materials, finishes, or equipment, all of which, if required, shall be incorporated by Change Order.

§ 3.3.3 The Construction Manager shall include with the Guaranteed Maximum Price proposal a written statement of the basis for the proposed Guaranteed Maximum Price, which shall include the following:

- **.1** A list of the Drawings and Specifications, including all Addenda thereto, and the Conditions of the Contract;
- **.2** A list of the clarifications and assumptions made by the Construction Manager in the preparation of the Guaranteed Maximum Price proposal, including assumptions under Section 3.2.2;
- **.3** A statement of the proposed Guaranteed Maximum Price, including a statement of the estimated Cost of the Work organized by trade categories or systems and consistent with the Draft Guaranteed Maximum Price form included as **Exhibit A**, including allowances; the Construction Manager's contingency set forth in Section 3.3.4; and the Construction Manager's Fee;
- **.4** The anticipated date of Substantial Completion upon which the proposed Guaranteed Maximum Price is based;
- **.5** A critical path schedule; and
- **.6** A date by which the Owner must accept the Guaranteed Maximum Price.

§ 3.3.4 Construction Manager's Contingency

In preparing the Construction Manager's Guaranteed Maximum Price proposal, the Construction Manager may include a contingency for the Construction Manager's exclusive use to cover those costs that are included in the Guaranteed Maximum Price but not otherwise allocated to another line item or included in a Change Order. If the Guaranteed Maximum Price is established prior to any of the Work being bid or bought out the Construction Manager's contingency may be up to five percent (5%) of the estimated Cost of the Work. When the Guarantee Maximum Price is established with ninety percent (90%) or more of the value of the Cost of the Work bid or bought out, the Construction Manager's contingency shall not exceed two percent (2%) of the estimated cost of the Work, plus one percent (1.0%) for addressing Subcontractor defaults.

§ 3.3.4.1 Construction Manager's contingency shall not be used to cover items resulting from the Construction Manager's negligence. It is further understood and agreed that such contingency shall be the maximum amount available, and may only be used for the following: (i) items of Work within the scope of this Agreement but due to Construction Manager's error failed to be included in a Subcontract; (ii) additional costs incurred as a result of a failure of a bidder to whom a portion of the Work is awarded in accordance with the Contract Documents to enter into a subcontract with the Construction Manager; (iii) unanticipated market conditions and labor and material conditions; (iv) casualty losses and related expenses uncompensated by insurance or otherwise and sustained by the Construction Manager in connection with the Work, except to the extent such losses or expenses are attributable, in whole or in part, to the Construction Manager's error or omission; and (v) costs arising from default of un-bonded and uncollectible Subcontractor.

§ 3.3.4.2 Use of the Construction Manager's contingency is conditioned on the Construction Manager first submitting to the Owner for approval a written request for a specific amount and justification for its use if time permitting. The Construction Manager shall report use of such contingency on the Applications for Payment. Construction Manager shall forfeit contingency amount committed or used if failed to report and to submit for payment after two subsequent monthly Applications for Payment.

§ 3.3.4.3 Because Construction Manager's contingency is to cover the above described unanticipated costs, the incidents of unanticipated costs should reduce as the Project progresses towards completion. Therefore, Construction

AIA Document A133 – 2019. Copyright © 1991, 2003, 2009, and 2019. All rights reserved. "The American Institute of Architects," "American Institute of Architects," "AIA," the AIA Logo, and "AIA Contract Documents" are trademarks of The American Institute of Architects. This draft was produced at 13:05:08 ET on 03/04/2025 under Order No.3104239075 which expires on 06/30/2025, is not for resale, is licensed for one-time use only, and may only be used in accordance with the AIA Contract Documents® Terms of Service. To report copyright violations, e-mail docinfo@aiacontracts.com.
User Notes: (1430878512)

Manager shall return to the Owner portions of such contingency according to the following schedule unless contingency expenditure at the following Project milestone of construction exceeded the then scheduled amounts, or unless the Construction Manager and Owner mutually agree to continue to hold contingency at a higher percentage to manage unanticipated risks for a longer period:

At completion of Building Enclosure	Thirty Three Percent (33%)
At 75% of Payment Request	Sixty Six Percent (66%)
At Substantial Completion	One Hundred Percent (100%)

§ 3.3.5 The Construction Manager shall meet with the Owner and Architect to review the Guaranteed Maximum Price proposal. In the event that the Owner or Architect discover any inconsistencies or inaccuracies in the information presented, they shall promptly notify the Construction Manager, who shall make appropriate adjustments to the Guaranteed Maximum Price proposal, its basis, or both.

§ 3.3.6 If the Owner notifies the Construction Manager that the Owner has accepted the Guaranteed Maximum Price proposal in writing before the date specified in the Guaranteed Maximum Price proposal, the Guaranteed Maximum Price proposal shall be deemed effective without further acceptance from the Construction Manager. Following acceptance of a Guaranteed Maximum Price, the Owner and Construction Manager shall execute the Guaranteed Maximum Price Amendment amending this Agreement, a copy of which the Owner shall provide to the Architect. The Guaranteed Maximum Price Amendment shall set forth the agreed upon Guaranteed Maximum Price with the information and assumptions upon which it is based.

§ 3.3.7 The Construction Manager shall not incur any cost to be reimbursed as part of the Cost of the Work prior to the execution of the Guaranteed Maximum Price Amendment, unless the Owner provides prior written authorization for such costs which shall be in the form of a Change Order or Construction Change Directive signed by the Architect.

§ 3.3.8 The Owner may authorize preparation of revisions to the Contract Documents that incorporate the agreed-upon assumptions and clarifications contained in the Guaranteed Maximum Price Amendment. The Owner may promptly furnish such revised Contract Documents to the Construction Manager. The Construction Manager shall notify the Owner and Architect of any inconsistencies between the agreed-upon assumptions and clarifications contained in the Guaranteed Maximum Price Amendment and the revised Contract Documents.

§ 3.3.9 The Construction Manager shall include in the Guaranteed Maximum Price all sales, consumer, use and similar taxes for the Work provided by the Construction Manager that are legally enacted, whether or not yet effective, at the time the Guaranteed Maximum Price Amendment is executed.

§ 3.3.10 The Owner being a government unit/non-profit entity and therefore procuring building materials and services may be exempt from federal, state, and local sales and use taxes. For tax exempt Projects, such taxes shall not be included in the Guaranteed Maximum Price. Construction Manager shall verify with Owner in writing concerning the tax-exempt status of each Project. In the event Owner's tax-exempt status changes during the course of the Project, Owner shall be responsible for any sales taxes relating to the Project imposed upon Construction Manager as a result of such change in Owner's tax status.

§ 3.4 Construction Phase

§ 3.4.1 General

§ 3.4.1.1 For purposes of Section 8.1.2 of A201–2017, the date of commencement of the Work shall mean the date of commencement of the Construction Phase. The Construction Manager shall fully execute the Work described in the Contract Documents, except to the extent specifically indicated in the Contract Documents to be the responsibility of others.

§ 3.4.1.2 The Construction Phase shall commence upon the Owner's execution of the Guaranteed Maximum Price Amendment or, prior to acceptance of the Guaranteed Maximum Price proposal, by written agreement of the parties. The written agreement shall set forth a description of the Work to be performed by the Construction Manager, and any insurance and bond requirements for Work performed prior to execution of the Guaranteed Maximum Price Amendment.

AIA Document A133 – 2019. Copyright © 1991, 2003, 2009, and 2019. All rights reserved. "The American Institute of Architects," "American Institute of Architects," "AIA," the AIA Logo, and "AIA Contract Documents" are trademarks of The American Institute of Architects. This draft was produced at 13:05:08 ET on 03/04/2025 under Order No.3104239075 which expires on 06/30/2025, is not for resale, is licensed for one-time use only, and may only be used in accordance with the AIA Contract Documents® Terms of Service. To report copyright violations, e-mail docinfo@aiacontracts.com.
User Notes: (1430878512)

§ 3.4.2 Administration

§ 3.4.2.1 The Construction Manager shall schedule and conduct meetings no less frequently than bi-weekly to discuss such matters as procedures, progress, coordination, scheduling, and status of the Work. The Construction Manager shall prepare and promptly distribute minutes of the meetings to the Owner and Architect.

§ 3.4.2.2 Upon the execution of the Guaranteed Maximum Price Amendment, the Construction Manager shall prepare and submit to the Owner and Architect a construction schedule for the Work and a submittal schedule in accordance with Section 3.10 of A201–2017.

§ 3.4.2.3 Monthly Report

The Construction Manager shall report on the progress of the Project as required by the Contract Documents or reasonably requested by the Owner.

§ 3.4.2.4 Daily Logs

The Construction Manager shall keep, and make available to the Owner and Architect, a daily log containing a record for each day of weather, portions of the Work in progress, number of workers on site, identification of operating and idle equipment on site, problems that might affect progress of the work, accidents, injuries, visitors, building official inspections, deliveries, and other information required by the Owner.

§ 3.4.2.5 Cost Control

The Construction Manager shall develop a system of cost control for the Work, including regular monitoring of actual costs for activities in progress and estimates for uncompleted tasks and proposed changes. The Construction Manager shall submit this system and its proposed reporting format to the Owner for its review and approval. The Construction Manager shall identify variances between actual and estimated costs and report the variances to the Owner and Architect and shall provide this information in its monthly reports to the Owner and Architect, in accordance with Section 3.4.2.3 above.

§3.4.2.6 Project Documentation

The Construction Manager shall keep, and make available to the Owner and Architect, a full set of Project records, including, but not limited to, all versions of Drawings and Specifications, as-built drawings, bulletins, requests for information and responses to such requests, submittals and responses to such submittals, daily reports, meeting minutes, schedules, correspondence, and applications for payment. The records shall be well organized and maintained electronically in a format the Owner and Architect may readily access.

§ 3.4.2.7 The Construction Manager shall inspect the work of the trade contractors on the Project as it is being performed until final completion and acceptance of the Project by the Owner to assure that the Work performed and the materials furnished are in accordance with the Contract Documents and that Work on the Project is progressing on schedule. In the event that the quality control testing should indicate that the Work, as installed, does not meet the requirements of the Project, the Architect shall determine the extent of the Work that fails to meet the requirements and the Construction Manager shall advise the Owner of the corrective action and direct the trade contractors(s) to take appropriate corrective action.

ARTICLE 4 OWNER'S RESPONSIBILITIES

§ 4.1 Information and Services Required of the Owner

§ 4.1.1 The Owner shall provide information with reasonable promptness, regarding requirements for and limitations on the Project, including a written program which shall set forth the Owner's objectives, constraints, and criteria, including schedule, space requirements and relationships, flexibility and expandability, special equipment, systems, sustainability and site requirements.

§ 4.1.2 Prior to the execution of the Guaranteed Maximum Price Amendment, the Construction Manager may request in writing that the Owner provide reasonable evidence that the Owner has made financial arrangements to fulfill the Owner's obligations under the Contract. After execution of the Guaranteed Maximum Price Amendment, the Construction Manager may request such information as set forth in A201-2017 Section 2.2.

§ 4.1.3 The Owner shall establish and periodically update the Owner's budget for the Project, including (1) the budget for the Cost of the Work as defined in Article 7, (2) the Owner's other costs, and (3) reasonable contingencies related to all of these costs. If the Owner significantly increases or decreases the Owner's budget for

AIA Document A133 – 2019. Copyright © 1991, 2003, 2009, and 2019. All rights reserved. "The American Institute of Architects," "American Institute of Architects," "AIA," the AIA Logo, and "AIA Contract Documents" are trademarks of The American Institute of Architects. This draft was produced at 13:05:08 ET on 03/04/2025 under Order No.3104239075 which expires on 06/30/2025, is not for resale, is licensed for one-time use only, and may only be used in accordance with the AIA Contract Documents® Terms of Service. To report copyright violations, e-mail docinfo@aiacontracts.com.
User Notes: (1430878512)

the Cost of the Work, the Owner shall notify the Construction Manager and Architect. The Owner and the Architect, in consultation with the Construction Manager, may thereafter agree to a corresponding change in the Project's scope and quality.

§ 4.1.4 Structural and Environmental Tests, Surveys and Reports. During the Preconstruction Phase, the Owner shall furnish the following information or services with reasonable promptness. The Owner shall also furnish any other information or services under the Owner's control and relevant to the Construction Manager's performance of the Work with reasonable promptness after receiving the Construction Manager's written request for such information or services. Provided the Construction Manager carefully review such information, Construction Manager shall be entitled to rely on the accuracy of information and services furnished by the Owner to the extent that is reasonable given the Construction Manager's careful review, but shall exercise proper precautions relating to the safe performance of the Work.

§ 4.1.4.1 The Construction Manager shall request, and the Owner shall furnish tests, inspections, and reports, required by law and as otherwise agreed to by the parties, such as structural, mechanical, and chemical tests, tests for air and water pollution, and tests for hazardous materials.

§ 4.1.4.2 The Construction Manager shall request, and the Owner shall furnish surveys describing known physical characteristics, legal limitations and known utility locations for the site of the Project, and a written legal description of the site. The surveys and legal information shall include, as applicable, grades and lines of streets, alleys, pavements and adjoining property and structures; designated wetlands; adjacent drainage; rights-of-way, restrictions, easements, encroachments, zoning, deed restrictions, boundaries and contours of the site; locations, dimensions and other necessary data with respect to existing buildings, other improvements and trees; and information concerning available utility services and lines, both public and private, above and below grade, including inverts and depths. All the information on the survey shall be referenced to a Project benchmark. Construction Manager shall be responsible for independently confirming the location of utility lines and exercising due caution related thereto.

§ 4.1.4.3 The Owner, when such services are reasonably requested, shall furnish services of geotechnical engineers, which may include test borings, test pits, determinations of soil bearing values, percolation tests, evaluations of hazardous materials, seismic evaluation, ground corrosion tests and resistivity tests, including necessary operations for anticipating subsoil conditions, with written reports and appropriate recommendations.

§ 4.1.5 During the Construction Phase, the Owner shall furnish information or services required of the Owner by the Contract Documents with reasonable promptness. The Owner shall also furnish any other information or services under the Owner's control and relevant to the Construction Manager's performance of the Work with reasonable promptness after receiving the Construction Manager's written request for such information or services.

§ 4.1.6 If the Owner identified a Sustainable Objective in Article 1, the Owner shall fulfill its responsibilities as required in AIA Document E234™–2019, Sustainable Projects Exhibit, Construction Manager as Constructor Edition, attached to this Agreement.

§ 4.2 Owner's Designated Representative

The Owner shall identify a representative authorized to act on behalf of the Owner with respect to the Project. The Owner's designated representative shall render decisions promptly and furnish information expeditiously, so as to avoid unreasonable delay in the services or Work of the Construction Manager. Except as otherwise provided in Section 4.2.1 of A201–2017, the Architect does not have such authority. The term "Owner" means the Owner or the Owner's designated representative.

§ 4.2.1 Legal Requirements. The Owner shall furnish all legal, insurance and accounting services, including auditing services, that may be reasonably necessary at any time for the Project to meet the Owner's needs and interests.

§ 4.3 Architect

The Owner shall retain an Architect to provide the services, duties and responsibilities of an architect. Upon request of the Construction Manager, the Owner shall provide the Construction Manager with a copy of the scope of services in the executed agreement between the Owner and the Architect, and any further modifications to the Architect's scope of services in the agreement.

AIA Document A133 – 2019. Copyright © 1991, 2003, 2009, and 2019. All rights reserved. "The American Institute of Architects," "American Institute of Architects," "AIA," the AIA Logo, and "AIA Contract Documents" are trademarks of The American Institute of Architects. This draft was produced at 13:05:08 ET on 03/04/2025 under Order No.3104239075 which expires on 06/30/2025, is not for resale, is licensed for one-time use only, and may only be used in accordance with the AIA Contract Documents® Terms of Service. To report copyright violations, e-mail docinfo@aiacontracts.com.
User Notes: (1430878512)

ARTICLE 5 COMPENSATION AND PAYMENTS FOR PRECONSTRUCTION PHASE SERVICES

§ 5.1 Compensation

§ 5.1.1 For the Construction Manager's Preconstruction Phase services described in Sections 3.1 and 3.2, the Owner shall compensate the Construction Manager as follows:
(Insert amount of, or basis for, compensation and include a list of reimbursable cost items, as applicable.)

Based on the Construction Manager's Hourly Rates, the Construction Manager shall provide the necessary Preconstruction Phase services for a Not-to-Exceed total fee of Seventy Eight Thousand Three Hundred Twelve Dollars ($78,312), which includes a Not-to-Exceed amount of Two Thousand Five Hundred Dollars ($2,500) for Reimbursable Expenses, and which shall be invoiced for upon execution of a Guaranteed Maximum Price Amendment, or otherwise the conclusion of a Construction Manager's Preconstruction Phase Services.

§ 5.1.2 The hourly billing rates for Preconstruction Phase services of the Construction Manager and the Construction Manager's Consultants and Subcontractors, if any, are set forth below.
(If applicable, attach an exhibit of hourly billing rates or insert them below.)

«As set forth in **Exhibit H**, Construction Manager's Hourly Rate Schedule. »

§ 5.1.2.1 Hourly billing rates for Preconstruction Phase services include all costs to be paid or incurred by the Construction Manager, as required by an applicable employment agreement, law or collective bargaining agreements, for taxes, insurance, contributions, assessments and benefits and, for personnel not covered by collective bargaining agreements, bonuses and customary benefits such as sick leave, medical and health benefits, holidays, vacations and pensions, shall remain unchanged unless the parties execute a Modification, and shall be fixed for the duration of the Project.

§ 5.1.3 If the Preconstruction Phase services covered by this Agreement have not been completed within «eighteen» («18») months of the date of this Agreement, through no fault of the Construction Manager or failure of the Project to meet the Owner's stated objectives of scope, schedule, or budget, the Construction Manager's compensation for Preconstruction Phase services shall be equitably adjusted by a Modification.

§ 5.2 Payments

§ 5.2.1 Unless otherwise agreed, payments for services shall be made monthly in proportion to services performed.

§ 5.2.2 Payments are due and payable upon presentation of the Construction Manager's invoice. Amounts «sixty» («60») days after the invoice date shall bear interest at the rate entered below, or in the absence thereof at the legal rate prevailing from time to time at the principal place of business of the Construction Manager.
(Insert rate of monthly or annual interest agreed upon.)

Zero percent (0%).

ARTICLE 6 COMPENSATION FOR CONSTRUCTION PHASE SERVICES

§ 6.1 Contract Sum

§ 6.1.1 The Owner shall pay the Construction Manager the Contract Sum in current funds for the Construction Manager's performance of the Contract after execution of the Guaranteed Maximum Price Amendment. The Contract Sum is the Cost of the Work as defined in Article 7 plus the Construction Manager's Fee.

§ 6.1.2 The Construction Manager's Fee:
(State a lump sum, percentage of Cost of the Work or other provision for determining the Construction Manager's Fee.)

The Construction Manager's Fee shall be two and one tenth percent (2.1%) of the Cost of the Work.

§ 6.1.3 The method of adjustment of the Construction Manager's Fee for changes in the Work:

If the Construction Manager's Fee is based on a percentage of the Cost of the Work, the basis of the Construction Manager's Fee shall not be adjusted based on changes in the Work, however, the Construction Manager's Fee shall be adjusted based on the percentage set forth in Section 6.1.2 for any changes to the Cost of the Work.

AIA Document A133 – 2019. Copyright © 1991, 2003, 2009, and 2019. All rights reserved. "The American Institute of Architects," "American Institute of Architects," "AIA," the AIA Logo, and "AIA Contract Documents" are trademarks of The American Institute of Architects. This draft was produced at 13:05:08 ET on 03/04/2025 under Order No.3104239075 which expires on 06/30/2025, is not for resale, is licensed for one-time use only, and may only be used in accordance with the AIA Contract Documents® Terms of Service. To report copyright violations, e-mail docinfo@aiacontracts.com.
User Notes: (1430878512)

§ 6.1.4 Limitations, if any, on a Subcontractor's overhead and profit for increases in the cost of its portion of the Work:

A subcontractor's overhead and profit shall not exceed ten percent (10%) of the actual cost of the changed Work, labor, equipment and material of a primary tier subcontractor; and five percent (5%) of the actual cost of changed Work, labor, equipment and material of a lower tier subcontractor.

§ 6.1.5 Reimbursable rental rates for equipment must be provided in writing to the Owner in advance for approval and to the are subject to the following limitations:

- **.1** Rental rates leased or rented equipment will be at the actual, documented lease or rental cost.
- **.2** Rental rates for Construction Manager-owned, related party-owned, or Subcontractor-owned equipment will not exceed the owned equipment rate set for each unit in the current edition of EquipmentWatch and no additional compensation shall be paid for operating costs.
- **.3** Rental rates for Construction Manager-owned, related party-owned or Subcontractor-owned equipment that has been idled due to a compensable delay shall not exceed on-half the owned equipment rate set for each unit in the current edition of EquipmentWatch and no compensation shall be paid for operating costs. Further, all equipment must be on site during the delay, be necessary for a critical path activity, and be unable to be used on a different activity. The Construction Manager shall bear the costs for such equipment that has been idled due to a non-compensable delay.
- **.4** The total rental rates paid for any small tool, those having total value less than $2,500, shall not exceed the total amount of that tool.
- **.5** The Construction Manager acknowledges its responsibility to actively mitigate Project costs including, but not limited to, rental costs and rental costs of idle equipment.

§ 6.1.6 Liquidated damages, if any:
(Insert terms and conditions for liquidated damages, if any.)

Not applicable.

§ 6.1.7 Other:
(Insert provisions for bonus, cost savings or other incentives, if any, that might result in a change to the Contract Sum.)

«Not applicable. »

§ 6.2 Guaranteed Maximum Price

The Construction Manager guarantees that the Contract Sum shall not exceed the Guaranteed Maximum Price set forth in the Guaranteed Maximum Price Amendment, which shall be in a form substantially similar to that attached hereto as **Exhibit A**, subject to additions and deductions by Change Order as provided in the Contract Documents. The Guaranteed Maximum Price guarantees that the Cost of the Work for the Hard Costs, Construction Manager's Direct Costs, and Personnel Costs are separately Guaranteed Line Items that shall not exceed the amount set forth in the Guaranteed Maximum Price Amendment. Costs which would cause the Guaranteed Maximum Price or a Guaranteed Line Item to be exceeded shall be paid by the Construction Manager without reimbursement by the Owner.

§ 6.2.1 The Guaranteed Maximum Price Amendment and the Construction Manager's Guaranteed Maximum Price proposal shall include the following Guaranteed Line Items within the Cost of the Work and shall only be adjusted with mutual agreement between the Construction Manager and Owner:

- **.1** **Construction Manager's Direct Costs**. The Construction Manager's Direct Costs include the costs to the Construction Manager for its insurance and bonds required under the Contract Documents as set forth in Section 7.6.1.
- **.2** **Construction Manager's Personnel Costs**. The Construction Manager's Personnel Costs include the costs to the Construction Manager for its personnel as set forth in Section 7.2.
- **.3** **Construction Manager's Hard Costs**. The Construction Manager's Hard Costs shall include any Cost of the Work authorized under Article 7 not included in the Construction Manager's Direct Costs or the Construction Manager's Personnel Costs.

AIA Document A133 – 2019. Copyright © 1991, 2003, 2009, and 2019. All rights reserved. "The American Institute of Architects," "American Institute of Architects," "AIA," the AIA Logo, and "AIA Contract Documents" are trademarks of The American Institute of Architects. This draft was produced at 13:05:08 ET on 03/04/2025 under Order No.3104239075 which expires on 06/30/2025, is not for resale, is licensed for one-time use only, and may only be used in accordance with the AIA Contract Documents® Terms of Service. To report copyright violations, e-mail docinfo@aiacontracts.com.
User Notes: (1430878512)

§ 6.2.2 The Guaranteed Maximum Price Amendment shall include an itemized schedule of values. As each Subcontract is awarded, the excess of the Estimated Costs of the Work (as shown on the schedule of values included in the Guaranteed Maximum Price Amendment) over the actual amount of the awarded for the applicable Subcontract shall be credited to a Buy-Out Savings line item on the schedule of values. Any excess in the actual amount of any awarded Subcontract over the Estimated Costs of the Work allocated to such Subcontract in the schedule of values shall be transferred from the Buy-Out Savings line of the schedule of values so long as sufficient funds remain in such line. This shall be an aggregate calculation, taking into consideration any Subcontracts that may have exceeded the budgeted amounts. Upon the completion of the awarding of all Subcontracts, any amount remaining in the Buy-Out Savings line of the schedule of values shall be returned to the Owner via Change Order.

§ 6.3 Changes in the Work

§ 6.3.1 The Owner may, without invalidating the Contract, order changes in the Work within the general scope of the Contract consisting of additions, deletions, or other revisions. The Owner shall issue such changes in writing. The Construction Manager may be entitled to an equitable adjustment in the Contract Time as a result of changes in the Work.

§ 6.3.1.1 The Architect may order minor changes in the Work as provided in Article 7 of AIA Document A201–2017, General Conditions of the Contract for Construction.

§ 6.3.2 Adjustments to the Guaranteed Maximum Price on account of changes in the Work subsequent to the execution of the Guaranteed Maximum Price Amendment may be determined by any of the methods listed in Article 7 of AIA Document A201–2017, General Conditions of the Contract for Construction.

§ 6.3.3 Adjustments to subcontracts awarded on the basis of a stipulated sum shall be determined in accordance with Article 7 of A201–2017, as they refer to "cost" and "fee," and not by Articles 6 and 7 of this Agreement. Adjustments to subcontracts awarded with the Owner's prior written consent on the basis of cost plus a fee shall be calculated in accordance with the terms of those subcontracts.

§ 6.3.4 In calculating adjustments to the Guaranteed Maximum Price, the terms "cost" and "costs" as used in Article 7 of AIA Document A201–2017 shall mean the Cost of the Work as defined in Article 7 of this Agreement and the term "fee" shall mean the Construction Manager's Fee as defined in Section 6.1.2 of this Agreement.

§ 6.3.5 If no specific provision is made in Section 6.1.3 for adjustment of the Construction Manager's Fee in the case of changes in the Work, or if the extent of such changes is such, in the aggregate, that application of the adjustment provisions of Section 6.1.3 will cause substantial inequity to the Owner or Construction Manager, the Construction Manager's Fee shall be equitably adjusted on the same basis that was used to establish the Fee for the original Work, and the Guaranteed Maximum Price shall be adjusted accordingly.

ARTICLE 7 COST OF THE WORK FOR CONSTRUCTION PHASE

§ 7.1 Costs to Be Reimbursed

§ 7.1.1 The term Cost of the Work shall mean actual costs necessarily incurred by the Construction Manager, without markup, in the proper performance of the Work. The Cost of the Work shall include only the items set forth in Sections 7.1 through 7.7.

§ 7.1.2 Where, pursuant to the Contract Documents, any cost is subject to the Owner's prior approval, the Construction Manager shall obtain such approval in writing prior to incurring the cost.

§ 7.1.3 Costs, wages, salaries, and charges, as used in this Article 7, shall mean actual costs without markup, except that in no event shall such costs, wages, salaries, or charges be at rates higher than the standard rates paid at the place of the Project, except with prior written approval of the Owner.

§ 7.2 Labor Costs

§ 7.2.1 Wages or salaries of construction workers directly employed by the Construction Manager to perform the construction of the Work at the site or, with the Owner's prior approval, at off-site workshops shall be the Construction Manager's Personnel Rates as set forth in **Exhibit H**. Construction Manager's Personnel Rates include escalation through December 31, 2027, and include mobile phone and mileage costs.

AIA Document A133 – 2019. Copyright © 1991, 2003, 2009, and 2019. All rights reserved. "The American Institute of Architects," "American Institute of Architects," "AIA," the AIA Logo, and "AIA Contract Documents" are trademarks of The American Institute of Architects. This draft was produced at 13:05:08 ET on 03/04/2025 under Order No.3104239075 which expires on 06/30/2025, is not for resale, is licensed for one-time use only, and may only be used in accordance with the AIA Contract Documents® Terms of Service. To report copyright violations, e-mail docinfo@aiacontracts.com.
User Notes: (1430878512)

§ 7.2.2 Wages or salaries of the Construction Manager's supervisory and administrative personnel when stationed at the site and performing Work, with the Owner's prior approval.

§ 7.2.2.1 Wages or salaries of the Construction Manager's supervisory and administrative personnel when performing Work and stationed at a location other than the site, but only for that portion of time required for the Work, and limited to the personnel and activities listed below:
(Identify the personnel, type of activity and, if applicable, any agreed upon percentage of time to be devoted to the Work.)
« »

§ 7.2.3 Wages and salaries of the Construction Manager's supervisory or administrative personnel engaged at factories, workshops or while traveling, in expediting the production or transportation of materials or equipment required for the Work, but only for that portion of their time required for the Work.

§ 7.2.4 Costs paid or incurred by the Construction Manager, as required by law or collective bargaining agreements, for taxes, insurance, contributions, assessments and benefits and, for personnel not covered by collective bargaining agreements, customary benefits such as sick leave, medical and health benefits, holidays, vacations and pensions, provided such costs are based on wages and salaries included in the Cost of the Work under Sections 7.2.1 through 7.2.3.

§ 7.2.5 If agreed rates for labor costs, in lieu of actual costs, are provided in this Agreement, the rates shall remain unchanged throughout the duration of this Agreement, unless the parties execute a Modification.

§ 7.3 Subcontract Costs
Payments made by the Construction Manager to Subcontractors in accordance with the requirements of the subcontracts and this Agreement.

§ 7.4 Costs of Materials and Equipment Incorporated in the Completed Construction
§ 7.4.1 Costs, including transportation and storage at the site, of materials and equipment incorporated, or to be incorporated, in the completed construction.

§ 7.4.2 Costs of materials described in the preceding Section 7.4.1 in excess of those actually installed to allow for reasonable waste and spoilage. Unused excess materials, if any, shall become the Owner's property at the completion of the Work or, at the Owner's option, shall be sold by the Construction Manager. Any amounts realized from such sales shall be credited to the Owner as a deduction from the Cost of the Work.

§ 7.5 Costs of Other Materials and Equipment, Temporary Facilities and Related Items
§ 7.5.1 Costs of transportation, storage, installation, dismantling, maintenance, and removal of materials, supplies, temporary facilities, machinery, equipment and hand tools not customarily owned by construction workers that are provided by the Construction Manager at the site and fully consumed in the performance of the Work. Costs of materials, supplies, temporary facilities, machinery, equipment, and tools, that are not fully consumed, shall be based on the cost or value of the item at the time it is first used on the Project site less the value of the item when it is no longer used at the Project site. Costs for items not fully consumed by the Construction Manager shall mean fair market value.

§ 7.5.2 Rental charges for temporary facilities, machinery, equipment, and hand tools not customarily owned by construction workers that are provided by the Construction Manager at the site, and the costs of transportation, installation, dismantling, minor repairs, and removal of such temporary facilities, machinery, equipment, and hand tools. Rates and quantities of equipment owned by the Construction Manager, or a related party as defined in Section 7.8, shall be subject to the Owner's prior approval. The total rental cost of any such equipment may not exceed the purchase price of any comparable item.

§ 7.5.3 Costs of removal of debris from the site of the Work and its proper and legal disposal.

§ 7.5.4 Costs of the Construction Manager's site office, including general office equipment and supplies.

AIA Document A133 – 2019. Copyright © 1991, 2003, 2009, and 2019. All rights reserved. "The American Institute of Architects," "American Institute of Architects," "AIA," the AIA Logo, and "AIA Contract Documents" are trademarks of The American Institute of Architects. This draft was produced at 13:05:08 ET on 03/04/2025 under Order No.3104239075 which expires on 06/30/2025, is not for resale, is licensed for one-time use only, and may only be used in accordance with the AIA Contract Documents® Terms of Service. To report copyright violations, e-mail docinfo@aiacontracts.com.
User Notes: (1430878512)

§ 7.5.5 Costs of materials and equipment suitably stored off the site at a mutually acceptable location, subject to the Owner's prior approval.

§ 7.6 Miscellaneous Costs

§ 7.6.1 Premiums for that portion of insurance and bonds required by the Contract Documents that can be directly attributed to this Contract.

§ 7.6.1.1 Reserved.

§ 7.6.1.2 Reserved.

§ 7.6.2 Sales, use, or similar taxes, imposed by a governmental authority, that are related to the Work and for which the Construction Manager is liable.

§ 7.6.3 Fees and assessments for the building permit, and for other permits, licenses, and inspections, for which the Construction Manager is required by the Contract Documents to pay.

§ 7.6.4 Fees for laboratories for tests required by the Contract Documents; except those related to defective or nonconforming Work for which reimbursement is excluded under Article 13 of AIA Document A201–2017 or by other provisions of the Contract Documents, and which do not fall within the scope of Section 7.7.3.

§ 7.6.5 Royalties and license fees paid for the use of a particular design, process, or product, required by the Contract Documents.

§ 7.6.5.1 The cost of defending suits or claims for infringement of patent rights arising from requirements of the Contract Documents, payments made in accordance with legal judgments against the Construction Manager resulting from such suits or claims, and payments of settlements made with the Owner's consent, unless the Construction Manager had reason to believe that the required design, process, or product was an infringement of a copyright or a patent, and the Construction Manager failed to promptly furnish such information to the Architect as required by Article 3 of AIA Document A201–2017. The costs of legal defenses, judgments, and settlements shall not be included in the Cost of the Work used to calculate the Construction Manager's Fee or subject to the Guaranteed Maximum Price.

§ 7.6.6 Costs for communications services, electronic equipment, and software, directly related to the Work and located at the site, with the Owner's prior approval.

§ 7.6.7 Costs of document reproductions and delivery charges.

§ 7.6.8 Deposits lost for causes other than the Construction Manager's negligence or failure to fulfill a specific responsibility in the Contract Documents.

§ 7.6.9 Legal, mediation and arbitration costs, including attorneys' fees, resulting from the Owner's acts or omissions but other than those arising from disputes between the Owner and Construction Manager, reasonably incurred by the Construction Manager after the execution of this Agreement in the performance of the Work and with the Owner's prior approval, which shall not be unreasonably withheld.

§ 7.6.10 Subject to the Owner's prior written approval, expenses incurred in accordance with the Construction Manager's standard written personnel policy for relocation and temporary living allowances of the Construction Manager's personnel required for the Work, with the Owner's prior approval.

§ 7.6.11 That portion of the reasonable expenses of the Construction Manager's supervisory or administrative personnel incurred while traveling in discharge of duties connected with the Work.

§ 7.7 Other Costs and Emergencies

§ 7.7.1 Other costs incurred in the performance of the Work, with the Owner's prior written approval.

AIA Document A133 – 2019. Copyright © 1991, 2003, 2009, and 2019. All rights reserved. "The American Institute of Architects," "American Institute of Architects," "AIA," the AIA Logo, and "AIA Contract Documents" are trademarks of The American Institute of Architects. This draft was produced at 13:05:08 ET on 03/04/2025 under Order No.3104239075 which expires on 06/30/2025, is not for resale, is licensed for one-time use only, and may only be used in accordance with the AIA Contract Documents® Terms of Service. To report copyright violations, e-mail docinfo@aiacontracts.com.
User Notes: (1430878512)

§ 7.7.2 Costs incurred in taking action to prevent threatened damage, injury, or loss, in case of an emergency affecting the safety of persons and property, as provided in Article 10 of AIA Document A201–2017.

§ 7.7.3 Costs of repairing or correcting damaged or nonconforming Work executed by the Construction Manager, Subcontractors, or suppliers, provided that such damaged or nonconforming Work was not caused by the negligence of, or failure to fulfill a specific responsibility by, the Construction Manager, Subcontractors, or suppliers, and only to the extent that the cost of repair or correction is not recovered by the Construction Manager from insurance (except that the Owner shall not be responsible for costs not covered due to any deductible self insured retainage), sureties, Subcontractors, suppliers, or others.

§ 7.7.4 Reserved.

§ 7.8 Related Party Transactions

§ 7.8.1 For purposes of this Section 7.8, the term "related party" shall mean (1) a parent, subsidiary, affiliate, or other entity having common ownership of, or sharing common management with, the Construction Manager; (2) any entity in which any stockholder in, or management employee of, the Construction Manager holds an equity interest in excess of ten percent in the aggregate; (3) any entity which has the right to control the business or affairs of the Construction Manager; or (4) any person, or any member of the immediate family of any person, who has the right to control the business or affairs of the Construction Manager.

§ 7.8.2 If any of the costs to be reimbursed arise from a transaction between the Construction Manager and a related party, the Construction Manager shall notify the Owner of the specific nature of the contemplated transaction, including the identity of the related party and the anticipated cost to be incurred, before any such transaction is consummated or cost incurred. If the Owner, after such notification, authorizes in writing the proposed transaction in writing, then the cost incurred shall be included as a cost to be reimbursed, and the Construction Manager shall procure the Work, equipment, goods, or service, from the related party, as a Subcontractor, according to the terms of Article 9. If the Owner fails to authorize the transaction in writing, the Construction Manager shall procure the Work, equipment, goods, or service from some person or entity other than a related party according to the terms of Article 9. The approval and notice obligation regarding related parties shall apply to any transaction with a related party of any tier of subcontract or supplier agreement.

§ 7.9 Costs Not To Be Reimbursed

§ 7.9.1 The Cost of the Work shall not include the items listed below:

- **.1** Salaries and other compensation of the Construction Manager's personnel stationed at the Construction Manager's principal office or offices other than the site office, except as specifically provided in Section 7.2, or as may be provided in Article 14;
- **.2** Bonuses, profit sharing, incentive compensation, and any other discretionary payments, paid to anyone hired by the Construction Manager or paid to any Subcontractor or vendor, unless the Owner has provided prior written approval;
- **.3** Expenses of the Construction Manager's principal office and offices other than the site office;
- **.4** Overhead and general expenses, except as may be expressly included in Sections 7.1 to 7.7;
- **.5** The Construction Manager's capital expenses, including interest on the Construction Manager's capital employed for the Work;
- **.6** Except as provided in Section 7.7.3 of this Agreement, costs due to the negligence of, or failure to fulfill a specific responsibility of the Contract by, the Construction Manager, Subcontractors, and suppliers, or anyone directly or indirectly employed by any of them or for whose acts any of them may be liable;
- **.7** Any cost not specifically and expressly described in Sections 7.1 to 7.7;
- **.8** Costs, other than costs included in Change Orders approved by the Owner, that would cause the Guaranteed Maximum Price to be exceeded;
- **.9** Costs for services incurred during the Preconstruction Phase;
- **.10** Unless authorized in writing in advance by the Owner, any costs for subcontractor default insurance or subcontractor bonds;
- **.11** Corporate accounting, data and check processing, and similar business transaction related costs related to the Work are part of Construction Manager's overhead business expenses and should have been included in Construction Manager's Fee;

AIA Document A133 – 2019. Copyright © 1991, 2003, 2009, and 2019. All rights reserved. "The American Institute of Architects," "American Institute of Architects," "AIA," the AIA Logo, and "AIA Contract Documents" are trademarks of The American Institute of Architects. This draft was produced at 13:05:08 ET on 03/04/2025 under Order No.3104239075 which expires on 06/30/2025, is not for resale, is licensed for one-time use only, and may only be used in accordance with the AIA Contract Documents® Terms of Service. To report copyright violations, e-mail docinfo@aiacontracts.com.
User Notes: (1430878512)

.12 All taxes (except for sales or use taxes – *Ref. Section 7.6.2*), including, but not limited to, Federal, State or Local Business Tax, Franchise Tax, Commercial Activities Tax, or similar taxes are the responsibility of the Construction Manager; and the Owner shall not pay or reimburse the Construction Manager for such tax obligations;

.13 Consultants to the Construction Manager not previously approved in writing by the Owner;

.14 Rental charges more than two weeks before and one week after the temporary facility, machine, or equipment is needed for the Work;

.15 Premiums for performance and payment bonds obtained by Subcontractors without the Owner's express written approval;

.16 Costs of self-insurance or costs of insurance through a captive insurer owned or controlled by the Construction Manager; and

.17 Any costs associated with an early or accelerated payment program.

ARTICLE 8 DISCOUNTS, REBATES, AND REFUNDS

§ 8.1 Cash discounts obtained on payments made by the Construction Manager shall accrue to the Owner if (1) before making the payment, the Construction Manager included the amount to be paid, less such discount, in an Application for Payment and received payment from the Owner, or (2) the Owner has deposited funds with the Construction Manager with which to make payments; otherwise, cash discounts shall accrue to the Construction Manager. Trade discounts, rebates, or refunds; equipment rental discounts, rebates, or refunds, insurance and surety bonding discounts and credits, and amounts received from sales of surplus materials and equipment shall accrue to the Owner, and the Construction Manager shall make provisions so that they can be obtained.

§ 8.2 Amounts that accrue to the Owner in accordance with the provisions of Section 8.1 shall be credited to the Owner as a deduction from the Cost of the Work.

ARTICLE 9 SUBCONTRACTS AND OTHER AGREEMENTS

§ 9.1 Those portions of the Work that the Construction Manager does not customarily perform with the Construction Manager's own personnel shall be performed under subcontracts or other appropriate agreements with the Construction Manager. The Owner may designate specific persons from whom, or entities from which, the Construction Manager shall obtain bids. The Construction Manager shall obtain bids from Subcontractors and suppliers of materials or equipment fabricated especially for the Work, who are qualified to perform that portion of the Work in accordance with the requirements of the Contract Documents. The Construction Manager shall deliver such bids to the Architect and Owner with an indication as to which bids the Construction Manager intends to accept. The Owner then has the right to review the Construction Manager's list of proposed subcontractors and suppliers in consultation with the Architect and, subject to Section 9.1.1, to object to any subcontractor or supplier. Any advice of the Architect, or approval or objection by the Owner, shall not relieve the Construction Manager of its responsibility to perform the Work in accordance with the Contract Documents. The Construction Manager shall not be required to contract with anyone to whom the Construction Manager has reasonable objection.

§ 9.1.1 When a specific subcontractor or supplier (1) is recommended to the Owner by the Construction Manager; (2) is qualified to perform that portion of the Work; and (3) has submitted a bid that conforms to the requirements of the Contract Documents without reservations or exceptions, but the Owner requires that another bid be accepted, then the Construction Manager may require that a Change Order be issued to adjust the Guaranteed Maximum Price by the difference between the bid of the person or entity recommended to the Owner by the Construction Manager and the amount of the subcontract or other agreement actually signed with the person or entity designated by the Owner.

§ 9.2 Subcontracts or other agreements shall conform to the applicable payment provisions of this Agreement and shall not be awarded on the basis of cost plus a fee without the Owner's prior written approval. If a subcontract is awarded on the basis of cost plus a fee, the Construction Manager shall provide in the subcontract for the Owner to receive the same audit rights with regard to the Subcontractor as the Owner receives with regard to the Construction Manager in Article 10.

§ 9.3 Subcontractor allowances shall be disclosed to the Owner and are subject to Section 3.8 of the AIA Document A201-2017.

§ 9.4 Any subcontract that includes work or supplies of a related party at any tier or level shall be subject to the provision of Sections 1.1.14.3 and 7.8.

AIA Document A133 – 2019. Copyright © 1991, 2003, 2009, and 2019. All rights reserved. "The American Institute of Architects," "American Institute of Architects," "AIA," the AIA Logo, and "AIA Contract Documents" are trademarks of The American Institute of Architects. This draft was produced at 13:05:08 ET on 03/04/2025 under Order No.3104239075 which expires on 06/30/2025, is not for resale, is licensed for one-time use only, and may only be used in accordance with the AIA Contract Documents® Terms of Service. To report copyright violations, e-mail docinfo@aiacontracts.com.
User Notes: (1430878512)

ARTICLE 10 ACCOUNTING RECORDS

§ 10.1 The Construction Manager shall implement the cost control system required by Section 3.4.2.5 and 3.4.2.6 and shall keep full and detailed records and accounts related to the Cost of the Work, and exercise such controls, as may be necessary for proper financial management under this Contract and to substantiate all costs incurred. The accounting and control systems shall be satisfactory to the Owner. The Owner and the Owner's auditors shall, during regular business hours and upon reasonable notice, be afforded access to, and shall be permitted to interview the Construction Manager's employees regarding the cost control system and audit and copy, the Construction Manager's records and accounts, including complete documentation supporting accounting entries, books, job cost reports, correspondence, instructions, drawings, receipts, subcontracts, Subcontractor's proposals, Subcontractor's invoices, purchase orders, vouchers, memoranda, and other data relating to this Contract. The Construction Manager shall preserve these records for a period of three years after final payment, or for such longer period as may be required by law.

§ 10.2 If an audit, inspection, or examination under Section 10.1 or Section 11.2.2 discloses an over-payment by the Owner, the Construction Manager shall refund the over-paid amount to the Owner. In the event the Construction Manager has over-billed the Owner in excess of one-half percent (0.5%) of the total Cost of the Work, the Construction Manager shall also reimburse the Owner the actual cost of the Owner's audit, inspection, or examination expenses.

ARTICLE 11 PAYMENTS FOR CONSTRUCTION PHASE SERVICES

§ 11.1 Progress Payments

§ 11.1.1 Based upon properly completed and supported Applications for Payment submitted to the Architect by the Construction Manager, and Certificates for Payment issued by the Architect, the Owner shall make progress payments on account of the Contract Sum, to the Construction Manager, as provided below and elsewhere in the Contract Documents.

§ 11.1.2 The period covered by each Application for Payment shall be one calendar month ending on the last day of the month.

§ 11.1.3 Provided an Application for Payment is received by the Architect not later than the «15th» day of a month, the Owner shall make payment of the amount certified to the Construction Manager not later than the «last» day of the «following» month. If an Application for Payment is received by the Architect after the application date fixed above, payment of the amount certified shall be made by the Owner not later than «sixty» («60») days after the Architect receives the Application for Payment.

§ 11.1.3.1 Notwithstanding payment provision in Section 11.1.3 above, if the Project financed is through a loan or grant or other financing arrangement, and the lender or financing entity is required to review and/or approve Application for Payment before Owner can make payment of the certified amount to the Construction Manager, payment of the certified amount to the Construction Manager shall not become due before five (5) business days after receiving approval and payment from lender or financing entity.
(Federal, state or local laws may require payment within a certain period of time.)

§ 11.1.4 With each Application for Payment, the Construction Manager shall submit payrolls, petty cash accounts, receipted invoices or invoices with check vouchers attached, and any other evidence required by the Owner or Architect to demonstrate that payments already made by the Construction Manager on account of the Cost of the Work equal or exceed progress payments already received by the Construction Manager, plus payrolls for the period covered by the present Application for Payment, less that portion of the progress payments attributable to the Construction Manager's Fee.

§ 11.1.5 Each Application for Payment shall be based on the most recent schedule of values submitted by the Construction Manager in accordance with the Contract Documents. The schedule of values shall allocate the entire Guaranteed Maximum Price among: (1) the various portions of the Work, with General Conditions Costs stated as a separate line on the schedule of values; (2) any contingency for costs that are included in the Guaranteed Maximum Price but not otherwise allocated to another line item or included in a Change Order; and (3) the Construction Manager's Fee.

AIA Document A133 – 2019. Copyright © 1991, 2003, 2009, and 2019. All rights reserved. "The American Institute of Architects," "American Institute of Architects," "AIA," the AIA Logo, and "AIA Contract Documents" are trademarks of The American Institute of Architects. This draft was produced at 13:05:08 ET on 03/04/2025 under Order No.3104239075 which expires on 06/30/2025, is not for resale, is licensed for one-time use only, and may only be used in accordance with the AIA Contract Documents® Terms of Service. To report copyright violations, e-mail docinfo@aiacontracts.com.
User Notes: (1430878512)

§ 11.1.5.1 The schedule of values shall be prepared in such form and supported by such data to substantiate its accuracy as the Owner or Architect may require. The schedule of values shall be used as a basis for reviewing the Construction Manager's Applications for Payment.

§ 11.1.5.2 Except for items set forth in Section 6.2.1, the allocations of the Guaranteed Maximum Price under this Section 11.1.5 shall not constitute a separate guaranteed maximum price for the Cost of the Work of each individual line item in the schedule of values.

§ 11.1.5.3 When the Construction Manager allocates costs from a contingency to another line item in the schedule of values, the Construction Manager shall submit supporting documentation to the Owner and Architect which shall be memorialized by a no cost Change Order.

§ 11.1.6 Applications for Payment shall show the percentage of completion of each portion of the Work as of the end of the period covered by the Application for Payment. The percentage of completion shall be the lesser of (1) the percentage of that portion of the Work which has actually been completed, or (2) the percentage obtained by dividing (a) the expense that has actually been incurred by the Construction Manager on account of that portion of the Work and for which the Construction Manager has made payment or intends to make payment prior to the next Application for Payment, by (b) the share of the Guaranteed Maximum Price allocated to that portion of the Work in the schedule of values.

§ 11.1.7 In accordance with AIA Document A201–2017 and subject to other provisions of the Contract Documents, the amount of each progress payment shall be computed as follows:

§ 11.1.7.1 The amount of each progress payment shall first include:

- **.1** That portion of the Guaranteed Maximum Price properly allocable to completed Work as determined by multiplying the percentage of completion of each portion of the Work by the share of the Guaranteed Maximum Price allocated to that portion of the Work in the most recent schedule of values;
- **.2** That portion of the Guaranteed Maximum Price properly allocable to materials and equipment delivered and suitably stored at the site for subsequent incorporation in the completed construction or, if approved in writing in advance by the Owner, suitably stored off the site at a location agreed upon in writing;
- **.3** That portion of Construction Change Directives that the Architect determines, in the Architect's professional judgment, to be reasonably justified; and
- **.4** The Construction Manager's Fee, computed upon the Cost of the Work described in the preceding Sections 11.1.7.1.1 and 11.1.7.1.2 at the rate stated in Section 6.1.2 or, if the Construction Manager's Fee is stated as a fixed sum in that Section, an amount that bears the same ratio to that fixed-sum fee as the Cost of the Work included in Sections 11.1.7.1.1 and 11.1.7.1.2 bears to a reasonable estimate of the probable Cost of the Work upon its completion.

§ 11.1.7.2 The amount of each progress payment shall then be reduced by:

- **.1** The aggregate of any amounts previously paid by the Owner;
- **.2** The amount, if any, withheld pursuant to Section 9.5 of the AIA Document A201–2017;
- **.3** Any amount for which the Construction Manager does not intend to pay a Subcontractor or material supplier, unless the Work has been performed by others the Construction Manager intends to pay;
- **.4** For Work performed or defects discovered since the last payment application, any amount for which the Architect may withhold payment, or nullify a Certificate of Payment in whole or in part, as provided in Article 9 of AIA Document A201–2017;
- **.5** The shortfall, if any, indicated by the Construction Manager in the documentation required by Section 11.1.4 to substantiate prior Applications for Payment, or resulting from errors subsequently discovered by the Owner's auditors in such documentation; and
- **.6** Retainage withheld pursuant to Section 11.1.8.

§ 11.1.8 Retainage

§ 11.1.8.1 To the extent permitted by law, for each progress payment made prior to Substantial Completion of the Work, the Owner may withhold the following amount, as retainage, from the payment otherwise due:

AIA Document A133 – 2019. Copyright © 1991, 2003, 2009, and 2019. All rights reserved. "The American Institute of Architects," "American Institute of Architects," "AIA," the AIA Logo, and "AIA Contract Documents" are trademarks of The American Institute of Architects. This draft was produced at 13:05:08 ET on 03/04/2025 under Order No.3104239075 which expires on 06/30/2025, is not for resale, is licensed for one-time use only, and may only be used in accordance with the AIA Contract Documents® Terms of Service. To report copyright violations, e-mail docinfo@aiacontracts.com.
User Notes: (1430878512)

(Insert a percentage or amount to be withheld as retainage from each Application for Payment. The amount of retainage may be limited by governing law.)
Ten percent (10%).

§ 11.1.8.1.1 The following items are not subject to retainage:
(Insert any items not subject to the withholding of retainage, such as general conditions, insurance, etc.)
Construction Manager's fee, staff, bonds, insurances, and general conditions costs shall not be subject to retainage.

§ 11.1.8.2 Reduction or limitation of retainage, if any, shall be as follows:
(If the retainage established in Section 11.1.8.1 is to be modified prior to Substantial Completion of the entire Work, insert provisions for such modification.)

.1 The Owner, in its sole discretion but after consulting with the Construction Manager and Architect, may release retainage for a trade or subcontractor at any time.

.2 When the Owner agrees the Work is fifty percent complete, retainage withheld from payments to the Construction Manager shall be reduced to five percent (5%), except that if Owner determines in its sole discretion that performance of the Work has not progressed in a timely manner or otherwise has not been performed as required by the Contract Documents, the Owner may elect to continue to subject future payments for the Work on the Project, or as applicable, the Work of any particular Subcontractor, to retainage of ten percent (10%) and not release any portion of retained amounts as provided above.

§ 11.1.8.3 Except as set forth in this Section 11.1.8.3, upon Substantial Completion of the Work, the Construction Manager may submit an Application for Payment that includes the retainage withheld from prior Applications for Payment pursuant to this Section 11.1.8. The Application for Payment submitted at Substantial Completion shall not include retainage as follows:
(Insert any other conditions for release of retainage, such as upon completion of the Owner's audit and reconciliation, upon Substantial Completion.)
The Owner may withhold retainage as set forth in Section 9.8.5 of the AIA Document A201-2017.

§ 11.1.9 If final completion of the Work is materially delayed through no fault of the Construction Manager, the Owner shall pay the Construction Manager any additional amounts in accordance with Article 9 of AIA Document A201–2017.

§ 11.1.10 Except with the Owner's prior written approval, the Construction Manager shall not make advance payments to suppliers for materials or equipment which have not been delivered and suitably stored at the site.

§ 11.1.11 The Owner and the Construction Manager shall agree upon a mutually acceptable procedure for review and approval of payments to Subcontractors, and the percentage of retainage held on Subcontracts, and the Construction Manager shall execute subcontracts in accordance with those agreements.

§ 11.1.12 In taking action on the Construction Manager's Applications for Payment the Architect and Owner shall be entitled to rely on the accuracy and completeness of the information furnished by the Construction Manager, and such action shall not be deemed to be a representation that (1) the Architect or Owner have made a detailed examination, audit, or arithmetic verification, of the documentation submitted in accordance with Section 11.1.4 or other supporting data; (2) that the Architect or Owner have made exhaustive or continuous on-site inspections; or (3) that the Architect or Owner have made examinations to ascertain how or for what purposes the Construction Manager has used amounts previously paid on account of the Contract. Such examinations, audits, and verifications, if required by the Owner, will be performed by the Owner's auditors acting in the sole interest of the Owner.

§ 11.2 Final Payment

§ 11.2.1 Final payment, constituting the entire unpaid balance of the Contract Sum, shall be made by the Owner to the Construction Manager when

.1 the Construction Manager has fully performed the Contract, except for the Construction Manager's responsibility to correct Work as provided in Article 12 of AIA Document A201–2017, and to satisfy other requirements, if any, which extend beyond final payment;

.2 the Construction Manager has submitted a final accounting for the Cost of the Work and a final Application for Payment; and

.3 a final Certificate for Payment has been issued by the Architect in accordance with Section 11.2.2.2.

AIA Document A133 – 2019. Copyright © 1991, 2003, 2009, and 2019. All rights reserved. "The American Institute of Architects," "American Institute of Architects," "AIA," the AIA Logo, and "AIA Contract Documents" are trademarks of The American Institute of Architects. This draft was produced at 13:05:08 ET on 03/04/2025 under Order No.3104239075 which expires on 06/30/2025, is not for resale, is licensed for one-time use only, and may only be used in accordance with the AIA Contract Documents® Terms of Service. To report copyright violations, e-mail docinfo@aiacontracts.com.
User Notes: (1430878512)

§ 11.2.2 Within 30 days of the Owner's receipt of the Construction Manager's final accounting for the Cost of the Work, the Owner shall conduct an audit of the Cost of the Work or notify the Architect that it will not conduct an audit.

§ 11.2.2.1 If the Owner conducts an audit of the Cost of the Work, the Owner shall, within 10 days after completion of the audit, submit a written report based upon the auditors' findings to the Architect.

§ 11.2.2.2 Within seven days after receipt of the written report described in Section 11.2.2.1, or receipt of notice that the Owner will not conduct an audit, and provided that the other conditions of Section 11.2.1 have been met, the Architect will either issue to the Owner a final Certificate for Payment with a copy to the Construction Manager, or notify the Construction Manager and Owner in writing of the Architect's reasons for withholding a certificate as provided in Article 9 of AIA Document A201–2017. In accordance with Article 9 of the AIA Document A201-2017, the Owner may audit the Project's records and accounting after the Architect's final Certificate for Payment. The Architect is not responsible for auditing the accuracy of the Construction Manager's final accounting, however the Architect shall exercise reasonable care in reviewing the Construction Manager's final accounting.

§ 11.2.2.3 If the Owner's auditors' report concludes that the Cost of the Work, as substantiated by the Construction Manager's final accounting, is less than claimed by the Construction Manager, the Construction Manager shall be entitled to request mediation of the disputed amount without seeking an initial decision pursuant to Article 15 of AIA Document A201–2017. A request for mediation shall be made by the Construction Manager within 30 days after the Construction Manager's receipt of a copy of the Architect's final Certificate for Payment. Failure to request mediation within this 30-day period shall result in the substantiated amount reported by the Owner's auditors becoming binding on the Construction Manager. Pending a final resolution of the disputed amount, the Owner shall pay the Construction Manager any undisputed amount certified in the Architect's final Certificate for Payment, however, the Owner may withhold any disputed amounts.

§ 11.2.3 The Owner's final payment to the Construction Manager shall be made no later than 30 days after the issuance of the Architect's final Certificate for Payment, after resolution of any dispute over the Owner's audit, or after resolution of all Claims, whichever comes lasts.

§ 11.2.4 If, subsequent to final payment, and at the Owner's request, the Construction Manager incurs costs, described in Sections 7.1 through 7.7, and not excluded by Section 7.9, to correct defective or nonconforming Work, the Owner shall reimburse the Construction Manager for such costs, and the Construction Manager's Fee applicable thereto, on the same basis as if such costs had been incurred prior to final payment, but not in excess of the Guaranteed Maximum Price. If adjustments to the Contract Sum are provided for in Section 6.1.7, the amount of those adjustments shall be recalculated, taking into account any reimbursements made pursuant to this Section 11.2.4 in determining the net amount to be paid by the Owner to the Construction Manager.

§ 11.2.5 Amounts withheld from the final payment to cover any incomplete work are not considered retainage and shall not be paid to the Construction Manager until the Work is actually completed and accepted by the Owner. Such withholdings shall not be less than one hundred fifty percent (150%) of the estimated cost to the complete the Work.

§ 11.2.6 The Owner shall have the right to deduct from the Final Payment due the Construction Manager all costs, including additional fees paid to Owner's consultants, which the Owner incurred as result of and attributed to Construction Manager's failure to fully complete and/or closeout the Project within sixty (60) days following Substantial Completion.

§ 11.2.7 Unless otherwise agreed to by the Owner, in writing, the Owner shall not be responsible for any costs incurred by the Construction Manager beyond sixty (60) days following Substantial Completion.

§ 11.3 Interest

Payments due and unpaid under the Contract shall bear interest from the date payment is due at the rate stated below, or in the absence thereof, at the legal rate prevailing from time to time at the place where the Project is located. Amounts withheld in accordance with the Contract Documents shall not be subject to interest.

AIA Document A133 – 2019. Copyright © 1991, 2003, 2009, and 2019. All rights reserved. "The American Institute of Architects," "American Institute of Architects," "AIA," the AIA Logo, and "AIA Contract Documents" are trademarks of The American Institute of Architects. This draft was produced at 13:05:08 ET on 03/04/2025 under Order No.3104239075 which expires on 06/30/2025, is not for resale, is licensed for one-time use only, and may only be used in accordance with the AIA Contract Documents® Terms of Service. To report copyright violations, e-mail docinfo@aiacontracts.com.
User Notes: (1430878512)

ARTICLE 12 DISPUTE RESOLUTION

§ 12.1 Initial Decision Maker

§ 12.1.1 Any Claim between the Owner and Construction Manager shall be resolved in accordance with the provisions set forth in this Article 12 and Article 15 of A201–2017. However, for Claims arising from or relating to the Construction Manager's Preconstruction Phase services, no decision by the Initial Decision Maker shall be required as a condition precedent to mediation or binding dispute resolution, and Section 12.1.2 of this Agreement shall not apply.

§ 12.1.2 The Architect will serve as the Initial Decision Maker pursuant to Article 15 of AIA Document A201–2017 for Claims arising from or relating to the Construction Manager's Construction Phase services, unless the parties appoint below another individual, not a party to the Agreement, to serve as the Initial Decision Maker.

§ 12.2 Binding Dispute Resolution

For any Claim subject to, but not resolved by mediation pursuant to Article 15 of AIA Document A201–2017, the method of binding dispute resolution shall be as follows:
(Check the appropriate box.)

[« »] Arbitration pursuant to Article 15 of AIA Document A201–2017

[« X »] Litigation in a court of competent jurisdiction

[« »] Other: Claims and disputes between the Owner and Construction Manager shall be resolved by litigation in the court of general jurisdiction county in which the Project is located (a court the Construction Manager agrees has personal jurisdiction over it and is a convenient venue) unless the Owner, at its sole option, elects to have the claim or dispute resolved in a different venue or by arbitration. The Construction Manager shall be bound by the Owner's election and any litigation already commenced shall be transferred to the Owner's chosen venue or stayed pending the conclusion of the arbitration proceedings. This agreement to arbitrate shall be specifically enforceable in any court having jurisdiction. The award rendered by the arbitrator or arbitrators shall be final, and judgment may be entered upon it in accordance with applicable law in any court having jurisdiction. The Construction Manager shall continue to perform its obligations under the Agreement during the pendency of any dispute resolution proceedings.

If the Owner and Construction Manager do not select a method of binding dispute resolution, or do not subsequently agree in writing to a binding dispute resolution method other than litigation, Claims will be resolved by litigation in a court of competent jurisdiction.

ARTICLE 13 TERMINATION OR SUSPENSION

§ 13.1 Termination Prior to Execution of the Guaranteed Maximum Price Amendment

§ 13.1.1 If the Owner and the Construction Manager do not reach an agreement on the Guaranteed Maximum Price, the Owner may terminate this Agreement upon not less than seven days' written notice to the Construction Manager.

§ 13.1.2 In the event of termination of this Agreement pursuant to Section 13.1.1, the Construction Manager shall be compensated for Preconstruction Phase services and Work performed prior to receipt of a notice of termination, in accordance with the terms of this Agreement. In no event shall the Construction Manager's compensation under this Section exceed the compensation set forth in Section 5.1.

§ 13.1.3 Prior to the execution of the Guaranteed Maximum Price Amendment, the Owner may terminate this Agreement upon written notice to the Construction Manager for the Owner's convenience and without cause.

§ 13.1.4 In the event of termination of this Agreement pursuant to Section 13.1.3, the Construction Manager shall be equitably compensated for Preconstruction Phase services and Work performed prior to receipt of a notice of termination. In no event shall the Construction Manager's compensation under this Section exceed the compensation set forth in Section 5.1.

AIA Document A133 – 2019. Copyright © 1991, 2003, 2009, and 2019. All rights reserved. "The American Institute of Architects," "American Institute of Architects," "AIA," the AIA Logo, and "AIA Contract Documents" are trademarks of The American Institute of Architects. This draft was produced at 13:05:08 ET on 03/04/2025 under Order No.3104239075 which expires on 06/30/2025, is not for resale, is licensed for one-time use only, and may only be used in accordance with the AIA Contract Documents® Terms of Service. To report copyright violations, e-mail docinfo@aiacontracts.com.
User Notes: (1430878512)

§ 13.1.5 If the Owner terminates the Contract pursuant to Section 13.1.3 after the commencement of the Construction Phase but prior to the execution of the Guaranteed Maximum Price Amendment, the Owner shall pay to the Construction Manager an amount calculated as follows, which amount shall be in addition to any compensation paid to the Construction Manager under Section 13.1.4:

.1 Take the Cost of the Work incurred by the Construction Manager to the date of termination;

.2 Add the Construction Manager's Fee computed upon the Cost of the Work to the date of termination at the rate stated in Section 6.1 or, if the Construction Manager's Fee is stated as a fixed sum in that Section, an amount that bears the same ratio to that fixed-sum Fee as the Cost of the Work at the time of termination bears to a reasonable estimate of the probable Cost of the Work upon its completion; and

.3 Subtract the aggregate of previous payments made by the Owner for Construction Phase services.

§ 13.1.6 The Owner shall also pay the Construction Manager fair compensation, either by purchase or rental at the election of the Owner, for any equipment owned by the Construction Manager that the Owner elects to retain and that is not otherwise included in the Cost of the Work under Section 13.1.5.1. To the extent that the Owner elects to take legal assignment of subcontracts and purchase orders (including rental agreements), the Construction Manager shall, as a condition of receiving the payments referred to in this Article 13, execute and deliver all such papers and take all such steps, including the legal assignment of such subcontracts and other contractual rights of the Construction Manager, as the Owner may require for the purpose of fully vesting in the Owner the rights and benefits of the Construction Manager under such subcontracts or purchase orders. All Subcontracts, purchase orders and rental agreements entered into by the Construction Manager will contain provisions allowing for assignment to the Owner as described above.

§ 13.1.6.1 If the Owner accepts assignment of subcontracts, purchase orders, or rental agreements as described above, the Owner will reimburse or indemnify the Construction Manager for all costs arising under the subcontract, purchase order, or rental agreement, if those costs would have been reimbursable as Cost of the Work if the contract had not been terminated. If the Owner chooses not to accept assignment of any subcontract, purchase order, or rental agreement that would have constituted a Cost of the Work had this agreement not been terminated, the Construction Manager will terminate the subcontract, purchase order, or rental agreement and the Owner will pay the Construction Manager the costs necessarily incurred by the Construction Manager because of such termination.

§ 13.2 Termination or Suspension Following Execution of the Guaranteed Maximum Price Amendment

§ 13.2.1 Termination

The Contract may be terminated by the Owner or the Construction Manager as provided in Article 14 of AIA Document A201–2017.

§ 13.2.2 Termination by the Owner for Cause

§ 13.2.2.1 If the Owner terminates the Contract for cause as provided in Article 14 of AIA Document A201–2017, the amount, if any, to be paid to the Construction Manager under Article 14 of AIA Document A201–2017 shall not cause the Guaranteed Maximum Price to be exceeded, nor shall it exceed an amount calculated as follows:

.1 Take the Cost of the Work incurred by the Construction Manager to the date of termination;

.2 Add the Construction Manager's Fee, computed upon the Cost of the Work to the date of termination at the rate stated in Section 6.1 or, if the Construction Manager' Fee is stated as a fixed sum in that Section, an amount that bears the same ratio to that fixed-sum Fee as the Cost of the Work at the time of termination bears to a reasonable estimate of the probable Cost of the Work upon its completion;

.3 Subtract the aggregate of previous payments made by the Owner; and

.4 Subtract the costs and damages incurred, or to be incurred, by the Owner under Article 14 of AIA Document A201–2017.

§ 13.2.2.2 The Owner shall also pay the Construction Manager fair compensation, either by purchase or rental at the election of the Owner, for any equipment owned by the Construction Manager that the Owner elects to retain and that is not otherwise included in the Cost of the Work under Section 13.2.2.1.1. To the extent that the Owner elects to take legal assignment of subcontracts and purchase orders (including rental agreements), the Construction Manager shall, as a condition of receiving the payments referred to in this Article 13, execute and deliver all such papers and take all such steps, including the legal assignment of such subcontracts and other contractual rights of the Construction Manager, as the Owner may require for the purpose of fully vesting in the Owner the rights and benefits of the Construction Manager under such subcontracts or purchase orders.

AIA Document A133 – 2019. Copyright © 1991, 2003, 2009, and 2019. All rights reserved. "The American Institute of Architects," "American Institute of Architects," "AIA," the AIA Logo, and "AIA Contract Documents" are trademarks of The American Institute of Architects. This draft was produced at 13:05:08 ET on 03/04/2025 under Order No.3104239075 which expires on 06/30/2025, is not for resale, is licensed for one-time use only, and may only be used in accordance with the AIA Contract Documents® Terms of Service. To report copyright violations, e-mail docinfo@aiacontracts.com.
User Notes: (1430878512)

§ 13.2.3 Reserved.

§ 13.3 Suspension

The Work may be suspended by the Owner as provided in Article 14 of AIA Document A201–2017; in such case, the Guaranteed Maximum Price and Contract Time shall be increased as provided in Article 14 of AIA Document A201–2017.

ARTICLE 14 MISCELLANEOUS PROVISIONS

§ 14.1 Terms in this Agreement shall have the same meaning as those in A201–2017. Where reference is made in this Agreement to a provision of AIA Document A201–2017 or another Contract Document, the reference refers to that provision as amended or supplemented by other provisions of the Contract Documents.

§ 14.2 Successors and Assigns

§ 14.2.1 The Owner and Construction Manager, respectively, bind themselves, their partners, successors, assigns and legal representatives to covenants, agreements, and obligations contained in the Contract Documents. Except as provided in Section 14.2.2 of this Agreement, and in Section 13.2.2 of A201–2017, neither party to the Contract shall assign the Contract as a whole without written consent of the other. If either party attempts to make an assignment without such consent, that party shall nevertheless remain legally responsible for all obligations under the Contract and the attempted assignment shall be void.

§ 14.2.2 The Owner may, without consent of the Construction Manager, assign the Contract to an affiliated or related entity or to lender providing construction financing for the Project, if the lender assumes the Owner's rights and obligations under the Contract Documents. The Construction Manager shall execute all consents reasonably required to facilitate the assignment.

§ 14.3 Insurance and Bonds

§ 14.3.1 Preconstruction Phase

The Construction Manager shall maintain the following insurance for the duration of the Preconstruction Services performed under this Agreement. If any of the requirements set forth below exceed the types and limits the Construction Manager normally maintains, the Owner shall reimburse the Construction Manager for any additional cost.

§ 14.3.1.1 Commercial General Liability with policy limits of not less than Two Million Dollars ($ 2,000,000) for each occurrence and Four Million Dollars ($ 4,000,000) in the aggregate for bodily injury and property damage.

§ 14.3.1.2 Automobile Liability covering vehicles owned, and non-owned vehicles used, by the Construction Manager with policy limits of not less than One Million Dollars ($ 1,000,000) per accident for bodily injury, death of any person, and property damage arising out of the ownership, maintenance and use of those motor vehicles, along with any other statutorily required automobile coverage.

§ 14.3.1.3 The Construction Manager may achieve the required limits and coverage for Commercial General Liability and Automobile Liability through a combination of primary and excess or umbrella liability insurance, provided that such primary and excess or umbrella liability insurance policies result in the same or greater coverage as the coverages required under Sections 14.3.1.1 and 14.3.1.2, and in no event shall any excess or umbrella liability insurance provide narrower coverage than the primary policy. The excess policy shall not require the exhaustion of the underlying limits only through the actual payment by the underlying insurers. Excess/Umbrella Liability with policy limits of not less than Ten Million Dollars ($ 10,000,000) for each occurrence and Ten Million Dollars ($ 10,000,000) in the aggregate.

§ 14.3.1.4 Workers' Compensation at statutory limits and Employers Liability with policy limits not less One Million Dollars ($ 1,000,000) each accident, One Million Dollars ($ 1,000,000) each employee, and One Million Dollars ($ 1,000,000) policy limit.

§ 14.3.1.5 Professional Liability covering negligent acts, errors and omissions in the performance of professional services, with policy limits of not less than Two Million Dollars» ($ 2,000,000) per claim and Four Million Dollars ($ 4,000,000) in the aggregate.

AIA Document A133 – 2019. Copyright © 1991, 2003, 2009, and 2019. All rights reserved. "The American Institute of Architects," "American Institute of Architects," "AIA," the AIA Logo, and "AIA Contract Documents" are trademarks of The American Institute of Architects. This draft was produced at 13:05:08 ET on 03/04/2025 under Order No.3104239075 which expires on 06/30/2025, is not for resale, is licensed for one-time use only, and may only be used in accordance with the AIA Contract Documents® Terms of Service. To report copyright violations, e-mail docinfo@aiacontracts.com.
User Notes: (1430878512)

§ 14.3.1.6 Other Insurance
(List below any other insurance coverage to be provided by the Construction Manager and any applicable limits.)

Coverage	Limits
Pollution Liability Insurance	Two Million Dollars» ($ 2,000,000) per claim Four Million Dollars ($ 4,000,000) in the aggregate.

§ 14.3.1.7 Additional Insured Obligations. To the fullest extent permitted by law, the Construction Manager shall cause the primary and excess or umbrella polices for Commercial General Liability and Automobile Liability to include the Owner, its Owner's Representative Consultant, the Architect and Architect's consultants as additional insureds for claims caused in whole or in part by the Construction Manager's negligent acts or omissions. The additional insured coverage shall be primary and non-contributory to any of the Owner's insurance policies and shall apply to both ongoing and completed operations.

§ 14.3.1.8 The Construction Manager shall provide certificates of insurance to the Owner that evidence compliance with the requirements in this Section 14.3.1.

§ 14.3.2 **Construction Phase**
Prior to the Construction Manager's commencement of the Work or mobilization on site, the Owner and the Construction Manager shall purchase and maintain insurance as set forth in AIA Document A133™–2019, Standard Form of Agreement Between Owner and Construction Manager as Constructor where the basis of payment is the Cost of the Work Plus a Fee with a Guaranteed Maximum Price, **Exhibit B**, Insurance and Bonds, and elsewhere in the Contract Documents.

§ 14.3.2.1 The Construction Manager shall provide bonds as set forth in AIA Document A133™–2019 **Exhibit B**, and elsewhere in the Contract Documents.

§ 14.4 Notice in electronic format, pursuant to Article 1 of AIA Document A201–2017.
« »
§ 14.5 Other provisions:
§ 14.5.1 GOVERNMENT AGENCY'S IMMUNITY FROM TORT LIABILITY. Notwithstanding any provisions within the Contract Documents, no provisions shall be deemed a waiver of any immunity granted the Owner, being a governmental unit, by statute, including, without limitation.

ARTICLE 15 SCOPE OF THE AGREEMENT
§ 15.1 This Agreement represents the entire and integrated agreement between the Owner and the Construction Manager and supersedes all prior negotiations, representations or agreements, either written or oral. This Agreement may be amended only by written instrument signed by both Owner and Construction Manager.

§ 15.2 The following documents comprise the Agreement:

.1 AIA Document A133™–2019, Standard Form of Agreement Between Owner and Construction Manager as Constructor where the basis of payment is the Cost of the Work Plus a Fee with a Guaranteed Maximum Price, as modified for the Project

.2 AIA Document A133™-2019, Exhibit A, Guaranteed Maximum Price Amendment, as modified for the Project

.3 AIA Document A133™–2019, Exhibit B, Insurance and Bonds, as modified for the Project

.4 AIA Document A201™–2017, General Conditions of the Contract for Construction, as modified for the Project

.5 Not Used

.6 Other Exhibits:
(Check all boxes that apply.)
[« »] AIA Document E234™–2019, Sustainable Projects Exhibit, Construction Manager as Constructor Edition, dated as indicated below:
(Insert the date of the E234-2019 incorporated into this Agreement.)
« »

AIA Document A133 – 2019. Copyright © 1991, 2003, 2009, and 2019. All rights reserved. "The American Institute of Architects," "American Institute of Architects," "AIA," the AIA Logo, and "AIA Contract Documents" are trademarks of The American Institute of Architects. This draft was produced at 13:05:08 ET on 03/04/2025 under Order No.3104239075 which expires on 06/30/2025, is not for resale, is licensed for one-time use only, and may only be used in accordance with the AIA Contract Documents® Terms of Service. To report copyright violations, e-mail docinfo@aiacontracts.com.
User Notes: (1430878512)

[« »] Supplementary and other Conditions of the Contract:

Document	Title	Date	Pages

[« X »] Other:

Exhibit C – Scope of Preconstruction Services
Exhibit D – Phasing and Project Milestone Schedule
Exhibit E – Construction Manager's Certificate(s) of Insurance
Exhibit F – Owner's Business Expenses and Travel Policy
Exhibit G – Not Used
Exhibit H – Construction Manager's Hourly Rate Schedule

.7 Other documents, if any, listed below:
(List here any additional documents that are intended to form part of the Contract Documents. AIA Document A201–2017 provides that the advertisement or invitation to bid, Instructions to Bidders, sample forms, the Construction Manager's bid or proposal, portions of Addenda relating to bidding or proposal requirements, and other information furnished by the Owner in anticipation of receiving bids or proposals, are not part of the Contract Documents unless enumerated in this Agreement. Any such documents should be listed here only if intended to be part of the Contract Documents.)

[signatures on following page]

DRAFT

AIA Document A133 – 2019. Copyright © 1991, 2003, 2009, and 2019. All rights reserved. "The American Institute of Architects," "American Institute of Architects," "AIA," the AIA Logo, and "AIA Contract Documents" are trademarks of The American Institute of Architects. This draft was produced at 13:05:08 ET on 03/04/2025 under Order No.3104239075 which expires on 06/30/2025, is not for resale, is licensed for one-time use only, and may only be used in accordance with the AIA Contract Documents® Terms of Service. To report copyright violations, e-mail docinfo@aiacontracts.com.
User Notes: (1430878512)

This Agreement is entered into as of the day and year as first written above.

CITY OF LIVONIA,

OWNER
(Signature)

«Maureen Miller Brosnan, Mayor »
(Printed name and title)

(date)

OWNER
(Signature)

«Lori Miller, City Clerk »« »
(Printed name and title)

(date)

and

OWNER
(Signature)

«Carter Fisher, City Attorney »« »
(Printed name and title)

(date)

GRANGER CONSTRUCTION COMPANY,

CONSTRUCTION MANAGER
(Signature)

«Dennis Carignan, President»« »
(Printed name and title)

(date)

DRAFT

AIA Document A133 – 2019. Copyright © 1991, 2003, 2009, and 2019. All rights reserved. "The American Institute of Architects," "American Institute of Architects," "AIA," the AIA Logo, and "AIA Contract Documents" are trademarks of The American Institute of Architects. This draft was produced at 13:05:08 ET on 03/04/2025 under Order No.3104239075 which expires on 06/30/2025, is not for resale, is licensed for one-time use only, and may only be used in accordance with the AIA Contract Documents® Terms of Service. To report copyright violations, e-mail docinfo@aiacontracts.com.
User Notes: (1430878512)

DRAFT

AIA® Document A201® – 2017

General Conditions of the Contract for Construction

These General Conditions of the Contract for Construction are dated as of the _____ of _____ in the year Two Thousand Twenty Five and supersede any prior versions of the General Conditions of the Contract for Construction for the Project below.

for the following PROJECT:
(Name and location or address)

Livonia City Center Program
New Police Station Facility

THE OWNER:
(Name, legal status and address)

City of Livonia
33000 Civic Center Drive
Livonia, Michigan 48154

THE ARCHITECT:
(Name, legal status and address)

«Hobbs + Black Associates, Inc. »« »
«100 N State Street
Ann Arbor, Michigan 48104 »
«(734) 663-4189 »

THE CONSTRUCTION MANAGER (also referred to as the "CONTRACTOR" herein):
(Name, legal status and address)

«Granger Construction Company »« »
6267 Aurelius Rd.
Lansing, Michigan 48911 »
«(517) 393-1670 »

ADDITIONS AND DELETIONS:
The author of this document has added information needed for its completion. The author may also have revised the text of the original AIA standard form. An *Additions and Deletions Report* that notes added information as well as revisions to the standard form text is available from the author and should be reviewed.

This document has important legal consequences. Consultation with an attorney is encouraged with respect to its completion or modification.

For guidance in modifying this document to include supplementary conditions, see AIA Document A503™, Guide for Supplementary Conditions.

ELECTRONIC COPYING of any portion of this AIA® Document to another electronic file is prohibited and constitutes a violation of copyright laws as set forth in the footer of this document.

AIA Document A201 – 2017. Copyright © 1911, 1915, 1918, 1925, 1937, 1951, 1958, 1961, 1963, 1966, 1970, 1976, 1987, 1997, 2007 and 2017. All rights reserved. "The American Institute of Architects," "American Institute of Architects," "AIA," the AIA Logo, and "AIA Contract Documents" are trademarks of The American Institute of Architects. This draft was produced at 12:48:57 ET on 03/03/2025 under Order No.3104239075 which expires on 06/30/2025, is not for resale, is licensed for one-time use only, and may only be used in accordance with the AIA Contract Documents® Terms of Service. To report copyright violations, e-mail docinfo@aiacontracts.com.
User Notes: (793080888)

TABLE OF ARTICLES

1 GENERAL PROVISIONS

2 OWNER

3 CONTRACTOR

4 ARCHITECT

5 SUBCONTRACTORS

6 CONSTRUCTION BY OWNER OR BY SEPARATE CONTRACTORS

7 CHANGES IN THE WORK

8 TIME

9 PAYMENTS AND COMPLETION

10 PROTECTION OF PERSONS AND PROPERTY

11 INSURANCE AND BONDS

12 UNCOVERING AND CORRECTION OF WORK

13 MISCELLANEOUS PROVISIONS

14 TERMINATION OR SUSPENSION OF THE CONTRACT

15 CLAIMS AND DISPUTES

DRAFT

AIA Document A201 – 2017. Copyright © 1911, 1915, 1918, 1925, 1937, 1951, 1958, 1961, 1963, 1966, 1970, 1976, 1987, 1997, 2007 and 2017. All rights reserved. "The American Institute of Architects," "American Institute of Architects," "AIA," the AIA Logo, and "AIA Contract Documents" are trademarks of The American Institute of Architects. This draft was produced at 12:48:57 ET on 03/03/2025 under Order No.3104239075 which expires on 06/30/2025, is not for resale, is licensed for one-time use only, and may only be used in accordance with the AIA Contract Documents® Terms of Service. To report copyright violations, e-mail docinfo@aiacontracts.com.
User Notes: (793080888)

INDEX
(Topics and numbers in bold are Section headings.)

Acceptance of Nonconforming Work
9.6.6, 9.9.3, **12.3**
Acceptance of Work
9.6.6, 9.8.2, 9.9.3, 9.10.1, 9.10.3, 12.3
Access to Work
3.16, 6.2.1, 12.1
Accident Prevention
10
Acts and Omissions
3.2, 3.3.2, 3.12.8, 3.18, 4.2.3, 8.3.1, 9.5.1, 10.2.5, 10.2.8, 13.3.2, 14.1, 15.1.2, 15.2
Addenda
1.1.1
Additional Costs, Claims for
3.7.4, 3.7.5, 10.3.2, 15.1.5
Additional Inspections and Testing
9.4.2, 9.8.3, 12.2.1, **13.4**
Additional Time, Claims for
3.2.4, 3.7.4, 3.7.5, 3.10.2, 8.3.2, **15.1.6**
Administration of the Contract
3.1.3, **4.2**, 9.4, 9.5
Advertisement or Invitation to Bid
1.1.1
Aesthetic Effect
4.2.13
Allowances
3.8
Applications for Payment
4.2.5, 7.3.9, 9.2, **9.3**, 9.4, 9.5.1, 9.5.4, 9.6.3, 9.7, 9.10
Approvals
2.1.1, 2.3.1, 2.5, 3.1.3, 3.10.2, 3.12.8, 3.12.9, 3.12.10.1, 4.2.7, 9.3.2, 13.4.1
Arbitration
8.3.1, 15.3.2, **15.4**
ARCHITECT
4
Architect, Definition of
4.1.1
Architect, Extent of Authority
2.5, 3.12.7, 4.1.2, 4.2, 5.2, 6.3, 7.1.2, 7.3.4, 7.4, 9.2, 9.3.1, 9.4, 9.5, 9.6.3, 9.8, 9.10.1, 9.10.3, 12.1, 12.2.1, 13.4.1, 13.4.2, 14.2.2, 14.2.4, 15.1.4, 15.2.1
Architect, Limitations of Authority and Responsibility
2.1.1, 3.12.4, 3.12.8, 3.12.10, 4.1.2, 4.2.1, 4.2.2, 4.2.3, 4.2.6, 4.2.7, 4.2.10, 4.2.12, 4.2.13, 5.2.1, 7.4, 9.4.2, 9.5.4, 9.6.4, 15.1.4, 15.2
Architect's Additional Services and Expenses
2.5, 12.2.1, 13.4.2, 13.4.3, 14.2.4
Architect's Administration of the Contract
3.1.3, 3.7.4, 15.2, 9.4.1, 9.5
Architect's Approvals
2.5, 3.1.3, 3.5, 3.10.2, 4.2.7
Architect's Authority to Reject Work
3.5, 4.2.6, 12.1.2, 12.2.1
Architect's Copyright
1.1.7, 1.5
Architect's Decisions
3.7.4, 4.2.6, 4.2.7, 4.2.11, 4.2.12, 4.2.13, 4.2.14, 6.3, 7.3.4, 7.3.9, 8.1.3, 8.3.1, 9.2, 9.4.1, 9.5, 9.8.4, 9.9.1, 13.4.2, 15.2
Architect's Inspections
3.7.4, 4.2.2, 4.2.9, 9.4.2, 9.8.3, 9.9.2, 9.10.1, 13.4
Architect's Instructions
3.2.4, 3.3.1, 4.2.6, 4.2.7, 13.4.2
Architect's Interpretations
4.2.11, 4.2.12
Architect's Project Representative
4.2.10
Architect's Relationship with Contractor
1.1.2, 1.5, 2.3.3, 3.1.3, 3.2.2, 3.2.3, 3.2.4, 3.3.1, 3.4.2, 3.5, 3.7.4, 3.7.5, 3.9.2, 3.9.3, 3.10, 3.11, 3.12, 3.16, 3.18, 4.1.2, 4.2, 5.2, 6.2.2, 7, 8.3.1, 9.2, 9.3, 9.4, 9.5, 9.7, 9.8, 9.9, 10.2.6, 10.3, 11.3, 12, 13.3.2, 13.4, 15.2
Architect's Relationship with Subcontractors
1.1.2, 4.2.3, 4.2.4, 4.2.6, 9.6.3, 9.6.4, 11.3
Architect's Representations
9.4.2, 9.5.1, 9.10.1
Architect's Site Visits
3.7.4, 4.2.2, 4.2.9, 9.4.2, 9.5.1, 9.9.2, 9.10.1, 13.4
Asbestos
10.3.1
Attorneys' Fees
3.18.1, 9.6.8, 9.10.2, 10.3.3
Award of Separate Contracts
6.1.1, 6.1.2
Award of Subcontracts and Other Contracts for Portions of the Work
5.2
Basic Definitions
1.1
Bidding Requirements
1.1.1
Binding Dispute Resolution
8.3.1, 9.7, 11.5, 13.1, 15.1.2, 15.1.3, 15.2.1, 15.2.5, 15.2.6.1, 15.3.1, 15.3.2, 15.3.3, 15.4.1
Bonds, Lien
7.3.4.4, 9.6.8, 9.10.2, 9.10.3
Bonds, Performance, and Payment
7.3.4.4, 9.6.7, 9.10.3, **11.1.2**, 11.1.3, **11.5**
Building Information Models Use and Reliance
1.8
Building Permit
3.7.1
Capitalization
1.3

AIA Document A201 – 2017. Copyright © 1911, 1915, 1918, 1925, 1937, 1951, 1958, 1961, 1963, 1966, 1970, 1976, 1987, 1997, 2007 and 2017. All rights reserved. "The American Institute of Architects," "American Institute of Architects," "AIA," the AIA Logo, and "AIA Contract Documents" are trademarks of The American Institute of Architects. This draft was produced at 12:48:57 ET on 03/03/2025 under Order No.3104239075 which expires on 06/30/2025, is not for resale, is licensed for one-time use only, and may only be used in accordance with the AIA Contract Documents® Terms of Service. To report copyright violations, e-mail docinfo@aiacontracts.com.
User Notes: (793080888)

Certificate of Substantial Completion
9.8.3, 9.8.4, 9.8.5
Certificates for Payment
4.2.1, 4.2.5, 4.2.9, 9.3.3, **9.4**, 9.5, 9.6.1, 9.6.6, 9.7, 9.10.1, 9.10.3, 14.1.1.3, 14.2.4, 15.1.4
Certificates of Inspection, Testing or Approval
13.4.4
Certificates of Insurance
9.10.2
Change Orders
1.1.1, 3.4.2, 3.7.4, 3.8.2.3, 3.11, 3.12.8, 4.2.8, 5.2.3, 7.1.2, 7.1.3, **7.2**, 7.3.2, 7.3.7, 7.3.9, 7.3.10, 8.3.1, 9.3.1.1, 9.10.3, 10.3.2, 11.2, 11.5, 12.1.2
Change Orders, Definition of
7.2.1
CHANGES IN THE WORK
2.2.2, 3.11, 4.2.8, **7**, 7.2.1, 7.3.1, 7.4, 8.3.1, 9.3.1.1, 11.5
Claims, Definition of
15.1.1
Claims, Notice of
1.6.2, 15.1.3
CLAIMS AND DISPUTES
3.2.4, 6.1.1, 6.3, 7.3.9, 9.3.3, 9.10.4, 10.3.3, **15**, 15.4
Claims and Timely Assertion of Claims
15.4.1
Claims for Additional Cost
3.2.4, 3.3.1, 3.7.4, 7.3.9, 9.5.2, 10.2.5, 10.3.2, **15.1.5**
Claims for Additional Time
3.2.4, 3.3.1, 3.7.4, 6.1.1, 8.3.2, 9.5.2, 10.3.2, **15.1.6**
Concealed or Unknown Conditions, Claims for
3.7.4
Claims for Damages
3.2.4, 3.18, 8.3.3, 9.5.1, 9.6.7, 10.2.5, 10.3.3, 11.3, 11.3.2, 14.2.4, 15.1.7
Claims Subject to Arbitration
15.4.1
Cleaning Up
3.15, 6.3
Commencement of the Work, Conditions Relating to
2.2.1, 3.2.2, 3.4.1, 3.7.1, 3.10.1, 3.12.6, 5.2.1, 5.2.3, 6.2.2, 8.1.2, 8.2.2, 8.3.1, 11.1, 11.2, **15.1.5**
Commencement of the Work, Definition of
8.1.2
Communications
3.9.1, **4.2.4**
Completion, Conditions Relating to
3.4.1, 3.11, 3.15, 4.2.2, 4.2.9, 8.2, 9.4.2, 9.8, 9.9.1, 9.10, 12.2, 14.1.2, 15.1.2
COMPLETION, PAYMENTS AND
9
Completion, Substantial
3.10.1, 4.2.9, 8.1.1, 8.1.3, 8.2.3, 9.4.2, 9.8, 9.9.1, 9.10.3, 12.2, 15.1.2
Compliance with Laws
2.3.2, 3.2.3, 3.6, 3.7, 3.12.10, 3.13, 9.6.4, 10.2.2, 13.1, 13.3, 13.4.1, 13.4.2, 13.5, 14.1.1, 14.2.1.3, 15.2.8, 15.4.2, 15.4.3
Concealed or Unknown Conditions
3.7.4, 4.2.8, 8.3.1, 10.3
Conditions of the Contract
1.1.1, 6.1.1, 6.1.4
Consent, Written
3.4.2, 3.14.2, 4.1.2, 9.8.5, 9.9.1, 9.10.2, 9.10.3, 13.2, 15.4.4.2
Consolidation or Joinder
15.4.4
CONSTRUCTION BY OWNER OR BY SEPARATE CONTRACTORS
1.1.4, **6**
Construction Change Directive, Definition of
7.3.1
Construction Change Directives
1.1.1, 3.4.2, 3.11, 3.12.8, 4.2.8, 7.1.1, 7.1.2, 7.1.3, **7.3**, 9.3.1.1
Construction Schedules, Contractor's
3.10, 3.11, 3.12.1, 3.12.2, 6.1.3, 15.1.6.2
Contingent Assignment of Subcontracts
5.4, 14.2.2.2
Continuing Contract Performance
15.1.4
Contract, Definition of
1.1.2
CONTRACT, TERMINATION OR SUSPENSION OF THE
5.4.1.1, 5.4.2, 11.5, **14**
Contract Administration
3.1.3, 4, 9.4, 9.5
Contract Award and Execution, Conditions Relating to
3.7.1, 3.10, 5.2, 6.1
Contract Documents, Copies Furnished and Use of
1.5.2, 2.3.6, 5.3
Contract Documents, Definition of
1.1.1
Contract Sum
2.2.2, 2.2.4, 3.7.4, 3.7.5, 3.8, 3.10.2, 5.2.3, 7.3, 7.4, **9.1**, 9.2, 9.4.2, 9.5.1.4, 9.6.7, 9.7, 10.3.2, 11.5, 12.1.2, 12.3, 14.2.4, 14.3.2, 15.1.4.2, **15.1.5, 15.2.5**
Contract Sum, Definition of
9.1
Contract Time
1.1.4, 2.2.1, 2.2.2, 3.7.4, 3.7.5, 3.10.2, 5.2.3, 6.1.5, 7.2.1.3, 7.3.1, 7.3.5, 7.3.6, 7, 7, 7.3.10, 7.4, 8.1.1, 8.2.1, 8.2.3, 8.3.1, 9.5.1, 9.7, 10.3.2, 12.1.1, 12.1.2, 14.3.2, 15.1.4.2, 15.1.6.1, 15.2.5
Contract Time, Definition of
8.1.1
CONTRACTOR
3

AIA Document A201 – 2017. Copyright © 1911, 1915, 1918, 1925, 1937, 1951, 1958, 1961, 1963, 1966, 1970, 1976, 1987, 1997, 2007 and 2017. All rights reserved. "The American Institute of Architects," "American Institute of Architects," "AIA," the AIA Logo, and "AIA Contract Documents" are trademarks of The American Institute of Architects. This draft was produced at 12:48:57 ET on 03/03/2025 under Order No.3104239075 which expires on 06/30/2025, is not for resale, is licensed for one-time use only, and may only be used in accordance with the AIA Contract Documents® Terms of Service. To report copyright violations, e-mail docinfo@aiacontracts.com.
User Notes: (793080888)

Contractor, Definition of
3.1, 6.1.2
Contractor's Construction and Submittal Schedules
3.10, 3.12.1, 3.12.2, 4.2.3, 6.1.3, 15.1.6.2
Contractor's Employees
2.2.4, 3.3.2, 3.4.3, 3.8.1, 3.9, 3.18.2, 4.2.3, 4.2.6, 10.2, 10.3, 11.3, 14.1, 14.2.1.1
Contractor's Liability Insurance
11.1
Contractor's Relationship with Separate Contractors and Owner's Forces
3.12.5, 3.14.2, 4.2.4, 6, 11.3, 12.2.4
Contractor's Relationship with Subcontractors
1.2.2, 2.2.4, 3.3.2, 3.18.1, 3.18.2, 4.2.4, 5, 9.6.2, 9.6.7, 9.10.2, 11.2, 11.3, 11.4
Contractor's Relationship with the Architect
1.1.2, 1.5, 2.3.3, 3.1.3, 3.2.2, 3.2.3, 3.2.4, 3.3.1, 3.4.2, 3.5.1, 3.7.4, 3.10, 3.11, 3.12, 3.16, 3.18, 4.2, 5.2, 6.2.2, 7, 8.3.1, 9.2, 9.3, 9.4, 9.5, 9.7, 9.8, 9.9, 10.2.6, 10.3, 11.3, 12, 13.4, 15.1.3, 15.2.1
Contractor's Representations
3.2.1, 3.2.2, 3.5, 3.12.6, 6.2.2, 8.2.1, 9.3.3, 9.8.2
Contractor's Responsibility for Those Performing the Work
3.3.2, 3.18, 5.3, 6.1.3, 6.2, 9.5.1, 10.2.8
Contractor's Review of Contract Documents
3.2
Contractor's Right to Stop the Work
2.2.2, 9.7
Contractor's Right to Terminate the Contract
14.1
Contractor's Submittals
3.10, 3.11, 3.12, 4.2.7, 5.2.1, 5.2.3, 9.2, 9.3, 9.8.2, 9.8.3, 9.9.1, 9.10.2, 9.10.3
Contractor's Superintendent
3.9, 10.2.6
Contractor's Supervision and Construction Procedures
1.2.2, 3.3, 3.4, 3.12.10, 4.2.2, 4.2.7, 6.1.3, 6.2.4, 7.1.3, 7.3.4, 7.3.6, 8.2, 10, 12, 14, 15.1.4
Coordination and Correlation
1.2, 3.2.1, 3.3.1, 3.10, 3.12.6, 6.1.3, 6.2.1
Copies Furnished of Drawings and Specifications
1.5, 2.3.6, 3.11
Copyrights
1.5, **3.17**
Correction of Work
2.5, 3.7.3, 9.4.2, 9.8.2, 9.8.3, 9.9.1, 12.1.2, **12.2**, 12.3, 15.1.3.1, 15.1.3.2, 15.2.1
Correlation and Intent of the Contract Documents
1.2
Cost, Definition of
7.3.4
Costs
2.5, 3.2.4, 3.7.3, 3.8.2, 3.15.2, 5.4.2, 6.1.1, 6.2.3, 7.3.3.3, 7.3.4, 7.3.8, 7.3.9, 9.10.2, 10.3.2, 10.3.6, 11.2, 12.1.2, 12.2.1, 12.2.4, 13.4, 14
Cutting and Patching
3.14, 6.2.5
Damage to Construction of Owner or Separate Contractors
3.14.2, 6.2.4, 10.2.1.2, 10.2.5, 10.4, 12.2.4
Damage to the Work
3.14.2, 9.9.1, 10.2.1.2, 10.2.5, 10.4, 12.2.4
Damages, Claims for
3.2.4, 3.18, 6.1.1, 8.3.3, 9.5.1, 9.6.7, 10.3.3, 11.3.2, 11.3, 14.2.4, 15.1.7
Damages for Delay
6.2.3, 8.3.3, 9.5.1.6, 9.7, 10.3.2, 14.3.2
Date of Commencement of the Work, Definition of
8.1.2
Date of Substantial Completion, Definition of
8.1.3
Day, Definition of
8.1.4
Decisions of the Architect
3.7.4, 4.2.6, 4.2.7, 4.2.11, 4.2.12, 4.2.13, 6.3, 7.3.4, 7.3.9, 8.1.3, 8.3.1, 9.2, 9.4, 9.5.1, 9.8.4, 9.9.1, 13.4.2, 14.2.2, 14.2.4, 15.1, 15.2
Decisions to Withhold Certification
9.4.1, **9.5**, 9.7, 14.1.1.3
Defective or Nonconforming Work, Acceptance, Rejection and Correction of
2.5, 3.5, 4.2.6, 6.2.3, 9.5.1, 9.5.3, 9.6.6, 9.8.2, 9.9.3, 9.10.4, 12.2.1
Definitions
1.1, 2.1.1, 3.1.1, 3.5, 3.12.1, 3.12.2, 3.12.3, 4.1.1, 5.1, 6.1.2, 7.2.1, 7.3.1, 8.1, 9.1, 9.8.1, 15.1.1
Delays and Extensions of Time
3.2, **3.7.4**, 5.2.3, 7.2.1, 7.3.1, **7.4**, **8.3**, 9.5.1, **9.7**, 10.3.2, **10.4**, 14.3.2, **15.1.6**, 15.2.5
Digital Data Use and Transmission
1.7
Disputes
6.3, 7.3.9, 15.1, 15.2
Documents and Samples at the Site
3.11
Drawings, Definition of
1.1.5
Drawings and Specifications, Use and Ownership of
3.11
Effective Date of Insurance
8.2.2
Emergencies
10.4, 14.1.1.2, **15.1.5**
Employees, Contractor's
3.3.2, 3.4.3, 3.8.1, 3.9, 3.18.2, 4.2.3, 4.2.6, 10.2, 10.3.3, 11.3, 14.1, 14.2.1.1

AIA Document A201 – 2017. Copyright © 1911, 1915, 1918, 1925, 1937, 1951, 1958, 1961, 1963, 1966, 1970, 1976, 1987, 1997, 2007 and 2017. All rights reserved. "The American Institute of Architects," "American Institute of Architects," "AIA," the AIA Logo, and "AIA Contract Documents" are trademarks of The American Institute of Architects. This draft was produced at 12:48:57 ET on 03/03/2025 under Order No.3104239075 which expires on 06/30/2025, is not for resale, is licensed for one-time use only, and may only be used in accordance with the AIA Contract Documents® Terms of Service. To report copyright violations, e-mail docinfo@aiacontracts.com.
User Notes: (793080888)

Equipment, Labor, or Materials
1.1.3, 1.1.6, 3.4, 3.5, 3.8.2, 3.8.3, 3.12, 3.13, 3.15.1, 4.2.6, 4.2.7, 5.2.1, 6.2.1, 7.3.4, 9.3.2, 9.3.3, 9.5.1.3, 9.10.2, 10.2.1, 10.2.4, 14.2.1.1, 14.2.1.2
Execution and Progress of the Work
1.1.3, 1.2.1, 1.2.2, 2.3.4, 2.3.6, 3.1, 3.3.1, 3.4.1, 3.7.1, 3.10.1, 3.12, 3.14, 4.2, 6.2.2, 7.1.3, 7.3.6, 8.2, 9.5.1, 9.9.1, 10.2, 10.3, 12.1, 12.2, 14.2, 14.3.1, 15.1.4
Extensions of Time
3.2.4, 3.7.4, 5.2.3, 7.2.1, 7.3, 7.4, 9.5.1, 9.7, 10.3.2, 10.4, 14.3, 15.1.6, **15.2.5**
Failure of Payment
9.5.1.3, **9.7**, 9.10.2, 13.5, 14.1.1.3, 14.2.1.2
Faulty Work
(See Defective or Nonconforming Work)
Final Completion and Final Payment
4.2.1, 4.2.9, 9.8.2, **9.10**, 12.3, 14.2.4, 14.4.3
Financial Arrangements, Owner's
2.2.1, 13.2.2, 14.1.1.4
GENERAL PROVISIONS
1
Governing Law
13.1
Guarantees (See Warranty)
Hazardous Materials and Substances
10.2.4, **10.3**
Identification of Subcontractors and Suppliers
5.2.1
Indemnification
3.17, **3.18**, 9.6.8, 9.10.2, 10.3.3, 11.3
Information and Services Required of the Owner
2.1.2, **2.2**, 2.3, 3.2.2, 3.12.10.1, 6.1.3, 6.1.4, 6.2.5, 9.6.1, 9.9.2, 9.10.3, 10.3.3, 11.2, 13.4.1, 13.4.2, 14.1.1.4, 14.1.4, 15.1.4
Initial Decision
15.2
Initial Decision Maker, Definition of
1.1.8
Initial Decision Maker, Decisions
14.2.4, 15.1.4.2, 15.2.1, 15.2.2, 15.2.3, 15.2.4, 15.2.5
Initial Decision Maker, Extent of Authority
14.2.4, 15.1.4.2, 15.2.1, 15.2.2, 15.2.3, 15.2.4, 15.2.5
Injury or Damage to Person or Property
10.2.8, 10.4
Inspections
3.1.3, 3.3.3, 3.7.1, 4.2.2, 4.2.6, 4.2.9, 9.4.2, 9.8.3, 9.9.2, 9.10.1, 12.2.1, 13.4
Instructions to Bidders
1.1.1
Instructions to the Contractor
3.2.4, 3.3.1, 3.8.1, 5.2.1, 7, 8.2.2, 12, 13.4.2
Instruments of Service, Definition of
1.1.7
Insurance
6.1.1, 7.3.4, 8.2.2, 9.3.2, 9.8.4, 9.9.1, 9.10.2, 10.2.5, **11**
Insurance, Notice of Cancellation or Expiration
11.1.4, 11.2.3
Insurance, Contractor's Liability
11.1
Insurance, Effective Date of
8.2.2, 14.4.2
Insurance, Owner's Liability
11.2
Insurance, Property
10.2.5, 11.2, 11.4, 11.5
Insurance, Stored Materials
9.3.2
INSURANCE AND BONDS
11
Insurance Companies, Consent to Partial Occupancy
9.9.1
Insured loss, Adjustment and Settlement of
11.5
Intent of the Contract Documents
1.2.1, 4.2.7, 4.2.12, 4.2.13
Interest
13.5
Interpretation
1.1.8, 1.2.3, **1.4**, 4.1.1, 5.1, 6.1.2, 15.1.1
Interpretations, Written
4.2.11, 4.2.12
Judgment on Final Award
15.4.2
Labor and Materials, Equipment
1.1.3, 1.1.6, **3.4**, 3.5, 3.8.2, 3.8.3, 3.12, 3.13, 3.15.1, 5.2.1, 6.2.1, 7.3.4, 9.3.2, 9.3.3, 9.5.1.3, 9.10.2, 10.2.1, 10.2.4, 14.2.1.1, 14.2.1.2
Labor Disputes
8.3.1
Laws and Regulations
1.5, 2.3.2, 3.2.3, 3.2.4, 3.6, 3.7, 3.12.10, 3.13, 9.6.4, 9.9.1, 10.2.2, 13.1, 13.3.1, 13.4.2, 13.5, 14, 15.2.8, 15.4
Liens
2.1.2, 9.3.1, 9.3.3, 9.6.8, 9.10.2, 9.10.4, 15.2.8
Limitations, Statutes of
12.2.5, 15.1.2, 15.4.1.1
Limitations of Liability
3.2.2, 3.5, 3.12.10, 3.12.10.1, 3.17, 3.18.1, 4.2.6, 4.2.7, 6.2.2, 9.4.2, 9.6.4, 9.6.7, 9.6.8, 10.2.5, 10.3.3, 11.3, 12.2.5, 13.3.1
Limitations of Time
2.1.2, 2.2, 2.5, 3.2.2, 3.10, 3.11, 3.12.5, 3.15.1, 4.2.7, 5.2, 5.3, 5.4.1, 6.2.4, 7.3, 7.4, 8.2, 9.2, 9.3.1, 9.3.3, 9.4.1, 9.5, 9.6, 9.7, 9.8, 9.9, 9.10, 12.2, 13.4, 14, 15, 15.1.2, 15.1.3, 15.1.5
Materials, Hazardous
10.2.4, **10.3**
Materials, Labor, Equipment and
1.1.3, 1.1.6, 3.4.1, 3.5, 3.8.2, 3.8.3, 3.12, 3.13, 3.15.1, 5.2.1, 6.2.1, 7.3.4, 9.3.2, 9.3.3, 9.5.1.3, 9.10.2, 10.2.1.2, 10.2.4, 14.2.1.1, 14.2.1.2

AIA Document A201 – 2017. Copyright © 1911, 1915, 1918, 1925, 1937, 1951, 1958, 1961, 1963, 1966, 1970, 1976, 1987, 1997, 2007 and 2017. All rights reserved. "The American Institute of Architects," "American Institute of Architects," "AIA," the AIA Logo, and "AIA Contract Documents" are trademarks of The American Institute of Architects. This draft was produced at 12:48:57 ET on 03/03/2025 under Order No.3104239075 which expires on 06/30/2025, is not for resale, is licensed for one-time use only, and may only be used in accordance with the AIA Contract Documents® Terms of Service. To report copyright violations, e-mail docinfo@aiacontracts.com.
User Notes: (793080888)

Means, Methods, Techniques, Sequences and Procedures of Construction
3.3.1, 3.12.10, 4.2.2, 4.2.7, 9.4.2
Mechanic's Lien
2.1.2, 9.3.1, 9.3.3, 9.6.8, 9.10.2, 9.10.4, 15.2.8
Mediation
8.3.1, 15.1.3.2, 15.2.1, 15.2.5, 15.2.6, **15.3**, 15.4.1, 15.4.1.1
Minor Changes in the Work
1.1.1, 3.4.2, 3.12.8, 4.2.8, 7.1, **7.4**
MISCELLANEOUS PROVISIONS
13
Modifications, Definition of
1.1.1
Modifications to the Contract
1.1.1, 1.1.2, 2.5, 3.11, 4.1.2, 4.2.1, 5.2.3, 7, 8.3.1, 9.7, 10.3.2
Mutual Responsibility
6.2
Nonconforming Work, Acceptance of
9.6.6, 9.9.3, **12.3**
Nonconforming Work, Rejection and Correction of
2.4, 2.5, 3.5, 4.2.6, 6.2.4, 9.5.1, 9.8.2, 9.9.3, 9.10.4, 12.2
Notice
1.6, 1.6.1, 1.6.2, 2.1.2, 2.2.2., 2.2.3, 2.2.4, 2.5, 3.2.4, 3.3.1, 3.7.4, 3.7.5, 3.9.2, 3.12.9, 3.12.10, 5.2.1, 7.4, 8.2.2 9.6.8, 9.7, 9.10.1, 10.2.8, 10.3.2, 11.5, 12.2.2.1, 13.4.1, 13.4.2, 14.1, 14.2.2, 14.4.2, 15.1.3, 15.1.5, 15.1.6, 15.4.1
Notice of Cancellation or Expiration of Insurance
11.1.4, 11.2.3
Notice of Claims
1.6.2, 2.1.2, 3.7.4, 9.6.8, 10.2.8, **15.1.3**, 15.1.5, 15.1.6, 15.2.8, 15.3.2, 15.4.1
Notice of Testing and Inspections
13.4.1, 13.4.2
Observations, Contractor's
3.2, 3.7.4
Occupancy
2.3.1, 9.6.6, 9.8
Orders, Written
1.1.1, 2.4, 3.9.2, 7, 8.2.2, 11.5, 12.1, 12.2.2.1, 13.4.2, 14.3.1
OWNER
2
Owner, Definition of
2.1.1
Owner, Evidence of Financial Arrangements
2.2, 13.2.2, 14.1.1.4
Owner, Information and Services Required of the
2.1.2, **2.2**, 2.3, 3.2.2, 3.12.10, 6.1.3, 6.1.4, 6.2.5, 9.3.2, 9.6.1, 9.6.4, 9.9.2, 9.10.3, 10.3.3, 11.2, 13.4.1, 13.4.2, 14.1.1.4, 14.1.4, 15.1.4
Owner's Authority
1.5, 2.1.1, 2.3.32.4, 2.5, 3.4.2, 3.8.1, 3.12.10, 3.14.2, 4.1.2, 4.2.4, 4.2.9, 5.2.1, 5.2.4, 5.4.1, 6.1, 6.3, 7.2.1, 7.3.1, 8.2.2, 8.3.1, 9.3.2, 9.5.1, 9.6.4, 9.9.1, 9.10.2, 10.3.2, 11.4, 11.5, 12.2.2, 12.3, 13.2.2, 14.3, 14.4, 15.2.7
Owner's Insurance
11.2
Owner's Relationship with Subcontractors
1.1.2, 5.2, 5.3, 5.4, 9.6.4, 9.10.2, 14.2.2
Owner's Right to Carry Out the Work
2.5, 14.2.2
Owner's Right to Clean Up
6.3
Owner's Right to Perform Construction and to Award Separate Contracts
6.1
Owner's Right to Stop the Work
2.4
Owner's Right to Suspend the Work
14.3
Owner's Right to Terminate the Contract
14.2, 14.4
Ownership and Use of Drawings, Specifications and Other Instruments of Service
1.1.1, 1.1.6, 1.1.7, **1.5**, 2.3.6, 3.2.2, 3.11, 3.17, 4.2.12, 5.3
Partial Occupancy or Use
9.6.6, **9.9**
Patching, Cutting and
3.14, 6.2.5
Patents
3.17
Payment, Applications for
4.2.5, 7.3.9, 9.2, **9.3**, 9.4, 9.5, 9.6.3, 9.7, 9.8.5, 9.10.1, 14.2.3, 14.2.4, 14.4.3
Payment, Certificates for
4.2.5, 4.2.9, 9.3.3, **9.4**, 9.5, 9.6.1, 9.6.6, 9.7, 9.10.1, 9.10.3, 14.1.1.3, 14.2.4
Payment, Failure of
9.5.1.3, **9.7**, 9.10.2, 13.5, 14.1.1.3, 14.2.1.2
Payment, Final
4.2.1, 4.2.9, **9.10**, 12.3, 14.2.4, 14.4.3
Payment Bond, Performance Bond and
7.3.4.4, 9.6.7, 9.10.3, **11.1.2**
Payments, Progress
9.3, **9.6**, 9.8.5, 9.10.3, 14.2.3, 15.1.4
PAYMENTS AND COMPLETION
9
Payments to Subcontractors
5.4.2, 9.5.1.3, 9.6.2, 9.6.3, 9.6.4, 9.6.7, 14.2.1.2
PCB
10.3.1
Performance Bond and Payment Bond
7.3.4.4, 9.6.7, 9.10.3, **11.1.2**
Permits, Fees, Notices and Compliance with Laws
2.3.1, **3.7**, 3.13, 7.3.4.4, 10.2.2
PERSONS AND PROPERTY, PROTECTION OF
10

AIA Document A201 – 2017. Copyright © 1911, 1915, 1918, 1925, 1937, 1951, 1958, 1961, 1963, 1966, 1970, 1976, 1987, 1997, 2007 and 2017. All rights reserved. "The American Institute of Architects," "American Institute of Architects," "AIA," the AIA Logo, and "AIA Contract Documents" are trademarks of The American Institute of Architects. This draft was produced at 12:48:57 ET on 03/03/2025 under Order No.3104239075 which expires on 06/30/2025, is not for resale, is licensed for one-time use only, and may only be used in accordance with the AIA Contract Documents® Terms of Service. To report copyright violations, e-mail docinfo@aiacontracts.com.
User Notes: (793080888)

Polychlorinated Biphenyl
10.3.1
Product Data, Definition of
3.12.2
Product Data and Samples, Shop Drawings
3.11, **3.12**, 4.2.7
Progress and Completion
4.2.2, **8.2**, 9.8, 9.9.1, 14.1.4, 15.1.4
Progress Payments
9.3, **9.6**, 9.8.5, 9.10.3, 14.2.3, 15.1.4
Project, Definition of
1.1.4
Project Representatives
4.2.10
Property Insurance
10.2.5, **11.2**
Proposal Requirements
1.1.1
PROTECTION OF PERSONS AND PROPERTY
10
Regulations and Laws
1.5, 2.3.2, 3.2.3, 3.6, 3.7, 3.12.10, 3.13, 9.6.4, 9.9.1, 10.2.2, 13.1, 13.3, 13.4.1, 13.4.2, 13.5, 14, 15.2.8, 15.4
Rejection of Work
4.2.6, 12.2.1
Releases and Waivers of Liens
9.3.1, 9.10.2
Representations
3.2.1, 3.5, 3.12.6, 8.2.1, 9.3.3, 9.4.2, 9.5.1, 9.10.1
Representatives
2.1.1, 3.1.1, 3.9, 4.1.1, 4.2.10, 13.2.1
Responsibility for Those Performing the Work
3.3.2, 3.18, 4.2.2, 4.2.3, 5.3, 6.1.3, 6.2, 6.3, 9.5.1, 10
Retainage
9.3.1, 9.6.2, 9.8.5, 9.9.1, 9.10.2, 9.10.3
Review of Contract Documents and Field Conditions by Contractor
3.2, 3.12.7, 6.1.3
Review of Contractor's Submittals by Owner and Architect
3.10.1, 3.10.2, 3.11, 3.12, 4.2, 5.2, 6.1.3, 9.2, 9.8.2
Review of Shop Drawings, Product Data and Samples by Contractor
3.12
Rights and Remedies
1.1.2, 2.4, 2.5, 3.5, 3.7.4, 3.15.2, 4.2.6, 5.3, 5.4, 6.1, 6.3, 7.3.1, 8.3, 9.5.1, 9.7, 10.2.5, 10.3, 12.2.1, 12.2.2, 12.2.4, **13.3**, 14, 15.4
Royalties, Patents and Copyrights
3.17
Rules and Notices for Arbitration
15.4.1
Safety of Persons and Property
10.2, 10.4
Safety Precautions and Programs
3.3.1, 4.2.2, 4.2.7, 5.3, **10.1**, 10.2, 10.4
Samples, Definition of
3.12.3
Samples, Shop Drawings, Product Data and
3.11, **3.12**, 4.2.7
Samples at the Site, Documents and
3.11
Schedule of Values
9.2, 9.3.1
Schedules, Construction
3.10, 3.12.1, 3.12.2, 6.1.3, 15.1.6.2
Separate Contracts and Contractors
1.1.4, 3.12.5, 3.14.2, 4.2.4, 4.2.7, 6, 8.3.1, 12.1.2
Separate Contractors, Definition of
6.1.1
Shop Drawings, Definition of
3.12.1
Shop Drawings, Product Data and Samples
3.11, **3.12**, 4.2.7
Site, Use of
3.13, 6.1.1, 6.2.1
Site Inspections
3.2.2, 3.3.3, 3.7.1, 3.7.4, 4.2, 9.9.2, 9.4.2, 9.10.1, 13.4
Site Visits, Architect's
3.7.4, 4.2.2, 4.2.9, 9.4.2, 9.5.1, 9.9.2, 9.10.1, 13.4
Special Inspections and Testing
4.2.6, 12.2.1, 13.4
Specifications, Definition of
1.1.6
Specifications
1.1.1, **1.1.6**, 1.2.2, 1.5, 3.12.10, 3.17, 4.2.14
Statute of Limitations
15.1.2, 15.4.1.1
Stopping the Work
2.2.2, 2.4, 9.7, 10.3, 14.1
Stored Materials
6.2.1, 9.3.2, 10.2.1.2, 10.2.4
Subcontractor, Definition of
5.1.1
SUBCONTRACTORS
5
Subcontractors, Work by
1.2.2, 3.3.2, 3.12.1, 3.18, 4.2.3, 5.2.3, 5.3, 5.4, 9.3.1.2, 9.6.7
Subcontractual Relations
5.3, 5.4, 9.3.1.2, 9.6, 9.10, 10.2.1, 14.1, 14.2.1
Submittals
3.10, 3.11, 3.12, 4.2.7, 5.2.1, 5.2.3, 7.3.4, 9.2, 9.3, 9.8, 9.9.1, 9.10.2, 9.10.3
Submittal Schedule
3.10.2, 3.12.5, 4.2.7
Subrogation, Waivers of
6.1.1, **11.3**
Substances, Hazardous
10.3
Substantial Completion
4.2.9, 8.1.1, 8.1.3, 8.2.3, 9.4.2, **9.8**, 9.9.1, 9.10.3, 12.2, 15.1.2

AIA Document A201 – 2017. Copyright © 1911, 1915, 1918, 1925, 1937, 1951, 1958, 1961, 1963, 1966, 1970, 1976, 1987, 1997, 2007 and 2017. All rights reserved. "The American Institute of Architects," "American Institute of Architects," "AIA," the AIA Logo, and "AIA Contract Documents" are trademarks of The American Institute of Architects. This draft was produced at 12:48:57 ET on 03/03/2025 under Order No.3104239075 which expires on 06/30/2025, is not for resale, is licensed for one-time use only, and may only be used in accordance with the AIA Contract Documents® Terms of Service. To report copyright violations, e-mail docinfo@aiacontracts.com.
User Notes: (793080888)

Substantial Completion, Definition of
9.8.1
Substitution of Subcontractors
5.2.3, 5.2.4
Substitution of Architect
2.3.3
Substitutions of Materials
3.4.2, 3.5, 7.3.8
Sub-subcontractor, Definition of
5.1.2
Subsurface Conditions
3.7.4
Successors and Assigns
13.2
Superintendent
3.9, 10.2.6
Supervision and Construction Procedures
1.2.2, **3.3**, 3.4, 3.12.10, 4.2.2, 4.2.7, 6.1.3, 6.2.4, 7.1.3, 7.3.4, 8.2, 8.3.1, 9.4.2, 10, 12, 14, 15.1.4
Suppliers
1.5, 3.12.1, 4.2.4, 4.2.6, 5.2.1, 9.3, 9.4.2, 9.5.4, 9.6, 9.10.5, 14.2.1
Surety
5.4.1.2, 9.6.8, 9.8.5, 9.10.2, 9.10.3, 11.1.2, 14.2.2, 15.2.7
Surety, Consent of
9.8.5, 9.10.2, 9.10.3
Surveys
1.1.7, 2.3.4
Suspension by the Owner for Convenience
14.3
Suspension of the Work
3.7.5, 5.4.2, 14.3
Suspension or Termination of the Contract
5.4.1.1, 14
Taxes
3.6, 3.8.2.1, 7.3.4.4
Termination by the Contractor
14.1, 15.1.7
Termination by the Owner for Cause
5.4.1.1, **14.2,** 15.1.7
Termination by the Owner for Convenience
14.4
Termination of the Architect
2.3.3
Termination of the Contractor Employment
14.2.2

TERMINATION OR SUSPENSION OF THE CONTRACT
14
Tests and Inspections
3.1.3, 3.3.3, 3.7.1, 4.2.2, 4.2.6, 4.2.9, 9.4.2, 9.8.3, 9.9.2, 9.10.1, 10.3.2, 12.2.1, **13.4**
TIME
8
Time, Delays and Extensions of
3.2.4, 3.7.4, 5.2.3, 7.2.1, 7.3.1, 7.4, **8.3**, 9.5.1, 9.7, 10.3.2, 10.4, 14.3.2, 15.1.6, 15.2.5
Time Limits
2.1.2, 2.2, 2.5, 3.2.2, 3.10, 3.11, 3.12.5, 3.15.1, 4.2, 5.2, 5.3, 5.4, 6.2.4, 7.3, 7.4, 8.2, 9.2, 9.3.1, 9.3.3, 9.4.1, 9.5, 9.6, 9.7, 9.8, 9.9, 9.10, 12.2, 13.4, 14, 15.1.2, 15.1.3, 15.4
Time Limits on Claims
3.7.4, 10.2.8, 15.1.2, 15.1.3
Title to Work
9.3.2, 9.3.3
UNCOVERING AND CORRECTION OF WORK
12
Uncovering of Work
12.1
Unforeseen Conditions, Concealed or Unknown
3.7.4, 8.3.1, 10.3
Unit Prices
7.3.3.2, 9.1.2
Use of Documents
1.1.1, 1.5, 2.3.6, 3.12.6, 5.3
Use of Site
3.13, 6.1.1, 6.2.1
Values, Schedule of
9.2, 9.3.1
Waiver of Claims by the Architect
13.3.2
Waiver of Claims by the Contractor
9.10.5, 13.3.2, **15.1.7**
Waiver of Claims by the Owner
9.9.3, 9.10.3, 9.10.4, 12.2.2.1, 13.3.2, 14.2.4, **15.1.7**
Waiver of Consequential Damages
14.2.4, 15.1.7
Waiver of Liens
9.3, 9.10.2, 9.10.4
Waivers of Subrogation
6.1.1, **11.3**
Warranty
3.5, 4.2.9, 9.3.3, 9.8.4, 9.9.1, 9.10.2, 9.10.4, 12.2.2, 15.1.2
Weather Delays
8.3, 15.1.6.2
Work, Definition of
1.1.3
Written Consent
1.5.2, 3.4.2, 3.7.4, 3.12.8, 3.14.2, 4.1.2, 9.3.2, 9.10.3, 13.2, 13.3.2, 15.4.4.2
Written Interpretations
4.2.11, 4.2.12
Written Orders
1.1.1, 2.4, 3.9, 7, 8.2.2, 12.1, 12.2, 13.4.2, 14.3.1

AIA Document A201 – 2017. Copyright © 1911, 1915, 1918, 1925, 1937, 1951, 1958, 1961, 1963, 1966, 1970, 1976, 1987, 1997, 2007 and 2017. All rights reserved. "The American Institute of Architects," "American Institute of Architects," "AIA," the AIA Logo, and "AIA Contract Documents" are trademarks of The American Institute of Architects. This draft was produced at 12:48:57 ET on 03/03/2025 under Order No.3104239075 which expires on 06/30/2025, is not for resale, is licensed for one-time use only, and may only be used in accordance with the AIA Contract Documents® Terms of Service. To report copyright violations, e-mail docinfo@aiacontracts.com.
User Notes: (793080888)

ARTICLE 1 GENERAL PROVISIONS

§ 1.1 Basic Definitions

§ 1.1.1 The Contract Documents

The Contract Documents are enumerated in the Agreement between the Owner and Contractor (hereinafter the Agreement) and consist of the Agreement, Conditions of the Contract (General, Supplementary and other Conditions), Drawings, Specifications, Addenda issued prior to execution of the Contract, other documents listed in the Agreement, and Modifications issued after execution of the Contract. A Modification is (1) a written amendment to the Contract signed by both parties, (2) a Change Order, (3) a Construction Change Directive, or (4) a written order for a minor change in the Work issued by the Architect.

§ 1.1.1.1 Unless specifically enumerated in the Agreement, the Contract Documents do not include the advertisement or invitation to bid, Instructions to Bidders, sample forms, other information furnished by the Owner in anticipation of receiving bids or proposals, the Contractor's bid or proposal, or portions of Addenda relating to bidding or proposal requirements. An assemblage of documents compiled as a project manual is not the Contract Documents, and the inclusion of a document in any such assemblage does not incorporate it into the Contract Documents unless it is specifically enumerated in the Agreement.

§ 1.1.2 The Contract

The Contract Documents form the Contract for Construction. The Contract represents the entire and integrated agreement between the parties hereto and supersedes prior negotiations, representations, or agreements, either written or oral. The Contract may be amended or modified only by a Modification. The Contract Documents shall not be construed to create a contractual relationship of any kind (1) between the Contractor and the Architect or the Architect's consultants, (2) between the Owner and a Subcontractor or a Sub-subcontractor, (3) between the Owner and the Architect or the Architect's consultants, (4) between the Contractor and the Owner's consultants, or (5) between any persons or entities other than the Owner and the Contractor. The Architect shall, however, be entitled to performance and enforcement of obligations under the Contract intended to facilitate performance of the Architect's duties.

§ 1.1.3 The Work

The term "Work" means the construction and services required by the Contract Documents, whether completed or partially completed, and includes all labor, materials, equipment, and services provided or to be provided by the Contractor to fulfill the Contractor's obligations. The Work may constitute the whole or a part of the Project.

§ 1.1.4 The Project

The Project is the total construction of which the Work performed under the Contract Documents may be the whole or a part and which may include construction by the Owner and by Separate Contractors.

§ 1.1.5 The Drawings

The Drawings are the graphic and pictorial portions of the Contract Documents showing the design, location and dimensions of the Work, generally including plans, elevations, sections, details, schedules, and diagrams.

§ 1.1.6 The Specifications

The Specifications are that portion of the Contract Documents consisting of the written requirements for materials, equipment, systems, standards and workmanship for the Work, and performance of related services.

§ 1.1.7 Instruments of Service

Instruments of Service are representations, in any medium of expression now known or later developed, of the tangible and intangible creative work performed by the Architect and the Architect's consultants under their respective professional services agreements. Instruments of Service may include, without limitation, studies, surveys, models, sketches, drawings, specifications, and other similar materials.

§ 1.1.8 Initial Decision Maker

The Initial Decision Maker is the person identified in the Agreement to render initial decisions on Claims in accordance with Section 15.2. The Initial Decision Maker shall not show partiality to the Owner or Contractor and shall not be liable for results of interpretations or decisions rendered in good faith.

§ 1.1.9 Construction Team

AIA Document A201 – 2017. Copyright © 1911, 1915, 1918, 1925, 1937, 1951, 1958, 1961, 1963, 1966, 1970, 1976, 1987, 1997, 2007 and 2017. All rights reserved. "The American Institute of Architects," "American Institute of Architects," "AIA," the AIA Logo, and "AIA Contract Documents" are trademarks of The American Institute of Architects. This draft was produced at 12:48:57 ET on 03/03/2025 under Order No.3104239075 which expires on 06/30/2025, is not for resale, is licensed for one-time use only, and may only be used in accordance with the AIA Contract Documents® Terms of Service. To report copyright violations, e-mail docinfo@aiacontracts.com.
User Notes: (793080888)

The Construction Team consists of the Contractor, Subcontractors, sub-subcontractor at any tier, suppliers and (i) all other persons in privity of contract with any of them in connection with the Work (except the Owner), (ii) anyone else providing labor, materials, supplies, equipment, or services as part of or in connection with the Work (except those, if any, hired directly or indirectly by the Owner), and (iii) all of their officers, employees, agents, and independent contractors.

§ 1.1.10 Project Team
The Project Team includes those listed in Section 1.1.9 and the Owner, the Owner's Representative Consultant, and the Architect in their official and individual capacities, their consultants, administrators, employees, agents, contractors, successors, assignees, and all other persons in privity of contract with any of them in connection with the Project.

§ 1.1.11 Applicable Law
Applicable Law refers to any applicable laws, statutes, ordinances, codes, rules and regulations, or lawful orders of public authorities bearing on the Work, Project, and the Construction Team's activities in relation to the Work and Project.

§1.1.12 OWNER'S REPRESENTATIVE CONSULTANT
The Owner's Representative Consultant means a consultant engaged by the Owner as outlined in the Agreement to advise them regarding certain aspects of the Project. The Owner's Representative Consultant is not authorized to commit or otherwise obligate the Owner including in matters regarding changes in the Work, construction schedule, or other approvals on behalf of the Owner.

§1.1.13 Knowledge
The term "knowledge," "recognize," and "discover," their respective derivatives, and similar terms in the Contract Documents, as used in reference to the Contractors, shall be interpreted to mean that which the Contractor knows (or should know), recognizes (or should recognize), and discovers (or should discover) in exercising the care, skill, and diligence required by the Contract Document. Analogously, the expression "reasonably inferable: and similar terms in the Contract Documents shall be interpreted to mean reasonably inferable by a contractor familiar with the Project and exercising the care, skill, and diligence required of the Contractor by the Contract Documents.

§ 1.2 Correlation and Intent of the Contract Documents
§ 1.2.1 The intent of the Contract Documents is to include all items necessary for the proper execution and completion of the Work by the Contractor, but Contract Documents are by nature generally diagrammatic. The Contractor shall therefore provide labor and materials that are consistent with the Contract Documents and reasonably inferable from them as being necessary to produce the indicated results for the Contract Sum and Contract Time, even if an item is not specifically drawn or specified. In the event of inconsistencies within or between parts of the Contract Documents, or between the Contract Documents and Applicable Law, the Contractor shall: (i) provide the better quality or greater quantity of Work, or (ii) comply with the more stringent requirement; either or both in accordance with the Architect's interpretation. The terms and conditions of this Section 1.2.1, however, shall not relieve the Contractor of any obligations set forth in Section 3.2 and 3.7.

§ 1.2.2 The invalidity of any provision of the Contract Documents shall not invalidate the Contract or its remaining provisions. If it is determined that any provision of the Contract Documents violates any law, or is otherwise invalid or unenforceable, then that provision shall be revised to the extent necessary to make that provision legal and enforceable. In such case the Contract Documents shall be construed, to the fullest extent permitted by law, to give effect to the parties' intentions and purposes in executing the Contract.

§ 1.2.3 The Contract Documents are complementary, and what is required by one shall be as binding as if required by all. Work not particularly detailed, marked or specified shall be the same as similar parts that are detailed, marked or specified. On certain Contract Documents, only a portion of the detail may be fully shown, and the remainder indicated in outline, in which case the general detail shall be understood as applying also to other like portions of the Work. For example, if case carving, ornament, facing, veneer or similar treatment is indicated by starting of the detail, such detail must be continued throughout the course of parts in which it occurs, and to all similar parts in the Work wherever such general detail shall apply unless otherwise specifically provided in the Contract Documents. Organization of the Specifications into divisions, sections and articles, and the arrangement of Drawings into categories does not relieve the Contractor of its obligation to coordinate the Work, does not control

AIA Document A201 – 2017. Copyright © 1911, 1915, 1918, 1925, 1937, 1951, 1958, 1961, 1963, 1966, 1970, 1976, 1987, 1997, 2007 and 2017. All rights reserved. "The American Institute of Architects," "American Institute of Architects," "AIA," the AIA Logo, and "AIA Contract Documents" are trademarks of The American Institute of Architects. This draft was produced at 12:48:57 ET on 03/03/2025 under Order No.3104239075 which expires on 06/30/2025, is not for resale, is licensed for one-time use only, and may only be used in accordance with the AIA Contract Documents® Terms of Service. To report copyright violations, e-mail docinfo@aiacontracts.com.
User Notes: (793080888)

the Contractor in dividing the Work among Subcontractors, and does not establish the extent of Work to be performed by any trade. Similarly, the organization of the Contractor's duties into different phases or categories in the Contract Documents is for convenience only and shall not limit the Contractor's obligation to provide all of the Work. The Contractor shall reconcile any such conflict presented by such organization without delay or cost to the Owner.

§ 1.2.4 References in the Contract Documents to standards, such as those published by trade associations and governmental agencies, whether for materials, processes, assemblies, workmanship, performance or any other purpose, shall mean the version of the standard published most recently prior to the date of the particular part of the Contract Documents bearing the reference. Unless expressly modified, all standards referred to by the Contract Documents have the same contractual effect as though restated therein. These standards will not be furnished to the Contractor, as the Contractor and all members of the Construction Team are required to be familiar with their requirements.

§ 1.2.5 Work called for on the Drawings and not mentioned in the Specifications, or vice versa, shall be performed as though fully set forth in both. Nothing in this Section 1.2, however, shall relieve the Contractor of any of its obligations under the Contract Documents. The Contractor shall be responsible for timely and thoroughly reviewing the Contract Documents to fully understand the nature and the scope of the Work, and shall promptly notify the Architect upon the discovery of any potential conflicts, discrepancies, gaps or other deficiencies. It is acknowledged by the Contractor that the Contractor has had, or will be afforded, the opportunity to review and seek clarification of the Contract Documents prior to entering into any Subcontract for the Work or entering into an agreement or amendment establishing the Contract Sum, Guaranteed Maximum price, or the Contract Time. The resolution of potential conflicts, discrepancies, gap, or other deficiencies of the Contract Documents shall be resolved under the following priorities:

- **.1** Modifications;
- **.2** The Agreement;
- **.3** These General Conditions of the Contract for Construction;
- **.4** Addenda, with those of later date having precedence over those of earlier date;
- **.5** The Supplementary Conditions;
- **.6** Division 00 and 01 of the Specifications (or similar information if the Specifications are in a format other than the Divisions outlined by the Construction Specification Institute's Master Format);
- **.7** Drawings and Divisions 2-49 of the Specifications (or equivalent information if the Specifications are in a format other than the Divisions outlined by the Construction Specification Institute's Master Format) as interpreted and prioritized by the Architect in accordance with Section 4.2.11, 4.2.12 and 4.2.13;
- **.8** Other documents specifically enumerated in the Agreement as part of the Contract Documents.

§ 1.2.6 Unless otherwise stated in the Contract Documents, words or abbreviations that have well-known technical or construction industry meanings are used in the Contract Documents in accordance with such recognized meanings.

§ 1.2.7 The singular shall include the plural and vice versa. Pronouns are interchangeable. The word "person" includes human beings and recognized legal entities. Unless the context clearly requires otherwise, reference to a section shall include all subsections beneath it bearing identical introductory numbers

§ 1.2.8 Delegated Design

§1.2.8.1 In the event the Contract Documents delegate the design of a portion of the Work to the Contractor or the Construction Team, or otherwise require the performance of professional services, the Contractor will provide all such services with the standard of care that would be followed on a comparable project by a reasonably skilled design professional in the same field working in the locality of the Project. The Contractor shall provide the services through a properly licensed design profession whose signature and seal shall appear on all drawings, specifications, submittals, and other deliverables. All Work designed by the Contractor or Construction Team shall be in accordance with applicable laws, statutes, ordinances, codes, rules and regulations, or lawful orders of public authorities.

§ 1.2.8.2 The Contractor will cooperate with the Architect and the Owner's consultants in the performance of any design that has been delegated to it in order to ensure its design can be coordinated with the Architect's design for the other portions of the Project.

AIA Document A201 – 2017. Copyright © 1911, 1915, 1918, 1925, 1937, 1951, 1958, 1961, 1963, 1966, 1970, 1976, 1987, 1997, 2007 and 2017. All rights reserved. "The American Institute of Architects," "American Institute of Architects," "AIA," the AIA Logo, and "AIA Contract Documents" are trademarks of The American Institute of Architects. This draft was produced at 12:48:57 ET on 03/03/2025 under Order No.3104239075 which expires on 06/30/2025, is not for resale, is licensed for one-time use only, and may only be used in accordance with the AIA Contract Documents® Terms of Service. To report copyright violations, e-mail docinfo@aiacontracts.com.
User Notes: (793080888)

§ 1.2.8.3 The Contractor will promptly inform the Owner of information needed to meet the Contractor's obligations under this Section 1.2.8.

§ 1.2.8.4 The Contractor grants, or will cause to be granted, to the Owner a perpetual, nonexclusive license to use all designs prepared by or for the Construction Team for constructing, using, maintaining, altering, and adding to the Project in the future.

§ 1.3 Capitalization

Terms capitalized in these General Conditions include those that are (1) specifically defined, (2) the titles of numbered articles, or (3) the titles of other documents published by the American Institute of Architects.

§ 1.4 Interpretation

In the interest of brevity the Contract Documents frequently omit modifying words such as "all" and "any" and articles such as "the" and "an," but the fact that a modifier or an article is absent from one statement and appears in another is not intended to affect the interpretation of either statement.

§ 1.5 Ownership and Use of Drawings, Specifications, and Other Instruments of Service

§ 1.5.1 The agreement between the Owner and Architect shall establish the ownership of the Instruments of Service, including the Drawings and Specifications and who will and retain all common law, statutory, and other reserved rights in the Instruments of Service, including copyrights. The Contractor, Subcontractors, Sub-subcontractors, and suppliers shall not own or claim a copyright in the Instruments of Service. Submittal or distribution to meet official regulatory requirements or for other purposes in connection with the Project is not to be construed as publication in derogation of any reserved rights.

§ 1.5.2 The Contractor, Subcontractors, Sub-subcontractors, and suppliers are authorized to use and reproduce the Instruments of Service provided to them, subject to any protocols established pursuant to Sections 1.7 and 1.8, solely and exclusively for execution of the Work. All copies made under this authorization shall bear the copyright notice, if any, shown on the Instruments of Service. The Contractor, Subcontractors, Sub-subcontractors, and suppliers may not use the Instruments of Service on other projects or for additions to the Project outside the scope of the Work without the specific written consent of the Owner, Architect, and the Architect's applicable consultants.

§ 1.5.3 In the event the Contract Documents require the Contractor to produce any intellectual property, the Contractor grants to the Owner a perpetual nonexclusive license to use and reproduce it for purposes of constructing, using, maintaining, altering, and adding to the Project, now and in the future. The Contractor shall obtain similar perpetual nonexclusive licenses from its Subcontractors and consultants. The license granted under this section permits the Owner to authorize its consultants, the Architect and its consultants, and the Owner's Separate Contractors to use and reproduce applicable portions of the intellectual property for purposes.

§ 1.6 Notice

§ 1.6.1 Except as otherwise provided in Section 1.6.2, where the Contract Documents require one party to notify or give notice to the other party, such notice shall be provided in writing to the designated representative of the party to whom the notice is addressed and shall be deemed to have been duly served if delivered in person, by mail, by courier, or by electronic transmission if a method for electronic transmission is set forth in the Agreement.

§ 1.6.2 Notice of Claims as provided in Section 15.1.3 shall be provided in writing and shall be deemed to have been duly served only if delivered to the designated representative of the party to whom the notice is addressed by United States Postal Service first class, certified, or registered mail, or by courier providing proof of delivery.

§ 1.7 Digital Data Use and Transmission

The Architect and Contractor shall agree upon protocols governing the transmission and use of Instruments of Service or any other information or documentation in digital form by the Construction Team. The Architect and Contractor may use AIA Document E203™–2013, Building Information Modeling and Digital Data Exhibit, to establish the protocols for the development, use, transmission, and exchange of digital data. No such protocols agreed upon by the Architect and Contractor shall in anyway relieve the Architect or any member of the Construction Team of any obligations or duty to the Owner, impact the Owner's rights in any Instruments of Service

AIA Document A201 – 2017. Copyright © 1911, 1915, 1918, 1925, 1937, 1951, 1958, 1961, 1963, 1966, 1970, 1976, 1987, 1997, 2007 and 2017. All rights reserved. "The American Institute of Architects," "American Institute of Architects," "AIA," the AIA Logo, and "AIA Contract Documents" are trademarks of The American Institute of Architects. This draft was produced at 12:48:57 ET on 03/03/2025 under Order No.3104239075 which expires on 06/30/2025, is not for resale, is licensed for one-time use only, and may only be used in accordance with the AIA Contract Documents® Terms of Service. To report copyright violations, e-mail docinfo@aiacontracts.com.
User Notes: (793080888)

or document, impose any obligation upon the Owner, nor give rise to any Additional Services of the Architect, charges to the Architect or Contractor, nor any change to the Contract Sum or Contract Time.

§ 1.8 Building Information Models Use and Reliance
Any use of, or reliance on, all or a portion of a building information model by the Construction Team without agreement to protocols governing the use of, and reliance on, the information contained in the model shall be at the using or relying party's sole risk and without liability to any other party or its contractors or consultants, the authors of, or contributors to, the building information model, and each of their agents and employees.

§ 1.9 Confidentiality
§ 1.9.1 The Contractor shall not communicate or disclose at any time to any person any information concerning the Work or the Project, except: (i) with prior written consent of the Owner, (ii) information which has become part of the public domain prior to the date of the Agreement, (iii) information which becomes part of the public domain by means other than an unauthorized act or omission of the Contractor, (iv) as may be required to perform the Work or by any Applicable Law, or (v) to its professional advisors or lender (all of whom shall be required to maintain such information in confidence). The obligations of this Section 1.9 are in addition to any separate confidentiality agreement with the Owner and shall not supersede or otherwise modify any such agreement.

§ 1.9.2 The Contractor may disclose information concerning the Work or the Project when disclosure is required by law, including a subpoena or other form of compulsory legal process. In the event of a disclosure required by law, the Contractor shall notify the Owner as far in advance as possible prior to any such disclosure and will reasonably cooperate with the Owner, at the Owner's expense, in any attempt it may make to obtain a protective order or other appropriate assurance that confidential treatment will be afforded the information. The Contractor may also disclose information concerning the Work or the Project to its employees, consultants, sureties, and members of the Construction Team who need to know the content of such information solely and exclusively for the Project and who agree to maintain its confidentiality.

§ 1.9.3 Members of the Construction Team shall promptly upon the request of the Owner return and surrender to the Owner the original or legible copies of any materials, records, notices, memoranda, recordings, Drawings, Specifications and mock-ups and any other documents furnished by the Owner and certify the destruction of any electronic copies of such documents.

§ 1.9.4 The Contractor shall not identify, either expressly or by implication, the Owner, or its corporate affiliates, or use any of their trademarks, trade names, service marks, other proprietary marks, or reference the services performed under the Agreement, in any advertising, press releases, publicity matters, or other promotional materials without the Owner's prior written approval.

§ 1.9.4 The Contractor shall cause all members of the Construction Team to specifically acknowledge that the provisions of this Section 1.9 are binding upon them.

ARTICLE 2 OWNER
§ 2.1 General
§ 2.1.1 The Owner is the person or entity identified as such in the Agreement and is referred to throughout the Contract Documents as if singular in number. The Owner shall designate in writing a representative who shall have express authority to bind the Owner with respect to all matters requiring the Owner's approval or authorization. The Architect and Owner's Representative Consultant do not have authority to modify the Contract Sum or the Contract Time, and they may only act on the Owner's behalf with respect to other matters to the extent set forth in the Contract Documents. The term "Owner" means the Owner or the Owner's authorized representative. The Owner may designate more than one authorized representative to act on its behalf, but shall describe the authority of the authorized representative(s) in writing to the Contractor and Architect.

§ 2.1.2 Contractor shall timely request and obtain from the owner, and if required under Applicable Law, conspicuously post on the Project site information necessary and relevant for the Construction Team to evaluate, give notice of, or enforce construction or mechanic's lien rights if they apply to the Project. Such information shall include a correct statement of the record legal title to the property on which the Project is located, usually referred to as the site, and the Owner's interest therein.

AIA Document A201 – 2017. Copyright © 1911, 1915, 1918, 1925, 1937, 1951, 1958, 1961, 1963, 1966, 1970, 1976, 1987, 1997, 2007 and 2017. All rights reserved. "The American Institute of Architects," "American Institute of Architects," "AIA," the AIA Logo, and "AIA Contract Documents" are trademarks of The American Institute of Architects. This draft was produced at 12:48:57 ET on 03/03/2025 under Order No.3104239075 which expires on 06/30/2025, is not for resale, is licensed for one-time use only, and may only be used in accordance with the AIA Contract Documents® Terms of Service. To report copyright violations, e-mail docinfo@aiacontracts.com.
User Notes: (793080888)

§ 2.1.3 The Owner may provide information necessary for members of the Construction Team to perfect assert claims on the Contractor's payment bond, if one has been provided.

§ 2.2 Evidence of the Owner's Financial Arrangements

§ 2.2.1 Prior to commencement of the Work and upon written request by the Contractor, the Owner shall furnish to the Contractor reasonable evidence that the Owner has made financial arrangements to fulfill the Owner's obligations under the Contract. The Contractor shall have no obligation to commence the Work until the Owner provides such evidence. If commencement of the Work is delayed under this Section 2.2.1, the Contract Time shall be extended appropriately.

§ 2.2.2 Following commencement of the Work and upon written request by the Contractor, the Owner shall furnish to the Contractor reasonable evidence that the Owner has made financial arrangements to fulfill the Owner's obligations under the Contract only if (1) the Owner fails to make payments to the Contractor as the Contract Documents require; (2) the Contractor identifies in writing a reasonable concern regarding the Owner's ability to make payment when due; or (3) a change in the Work materially changes the Contract Sum.

§ 2.2.3 After the Owner furnishes evidence of financial arrangements under this Section 2.2, the Owner shall not materially vary such financial arrangements without prior notice to the Contractor.

§ 2.2.4 All information on the Owner's financing arrangements provided to the Contractor is confidential and is subject to the provisions of Section 1.9, except that the Contractor will not disclose such information to the Construction Team without the Owner's prior written authorization.

§ 2.3 Information and Services Required of the Owner

§ 2.3.1 Except for permits and fees that are the responsibility of the Contractor under the Contract Documents, including those required under Section 3.7.1, the Owner shall secure and pay for necessary approvals, easements, assessments and charges required for construction, use or occupancy of permanent structures or for permanent changes in existing facilities. All permits and approvals not specifically identified in the Agreement or Contract Documents as the responsibility of the Owner are the responsibility of the Contractor.

§ 2.3.2 The Owner may retain an architect lawfully licensed to practice architecture, or an entity lawfully practicing architecture, in the jurisdiction where the Project is located. That person or entity is identified as the Architect in the Agreement and is referred to throughout the Contract Documents as if singular in number.

§ 2.3.3 If the employment of the Architect terminates, the Owner may employ a successor whose status under the Contract Documents shall be that of the Architect.

§ 2.3.4 The Owner shall furnish surveys describing known physical characteristics, legal limitations and utility locations for the site of the Project, and a legal description of the site. To the extent reasonable and conditioned upon the Contractors careful review of such information, the Contractor shall be entitled to rely on the accuracy of information furnished by the Owner but shall exercise proper precautions relating to the safe performance of the Work and its impact on existing facilities and utilities. The Contractor shall advise the Owner and Architect of additional information that may be needed to limit the Work's impact on them or is otherwise advisable. The Contractor shall promptly notify the Owner and the Architect of any errors, problems, or inaccuracies in any of the information provided by the Owner.

§ 2.3.5 The Owner shall furnish information or services required of the Owner by the Contract Documents with reasonable promptness. The Owner shall also furnish any other information or services under the Owner's control and relevant to the Contractor's performance of the Work with reasonable promptness after receiving the Contractor's written request for such information or services.

§ 2.3.6 If requested by the Contractor, the Owner shall furnish to the Contractor one copy of the Contract Documents for purposes of making reproductions pursuant to Section 1.5.2.

§ 2.4 Owner's Right to Stop the Work

If the Contractor fails to correct Work that is not in accordance with the requirements of the Contract Documents, fails to carry out Work in accordance with the Contract Documents, or fails to meet any other obligation imposed by

AIA Document A201 – 2017. Copyright © 1911, 1915, 1918, 1925, 1937, 1951, 1958, 1961, 1963, 1966, 1970, 1976, 1987, 1997, 2007 and 2017. All rights reserved. "The American Institute of Architects," "American Institute of Architects," "AIA," the AIA Logo, and "AIA Contract Documents" are trademarks of The American Institute of Architects. This draft was produced at 12:48:57 ET on 03/03/2025 under Order No.3104239075 which expires on 06/30/2025, is not for resale, is licensed for one-time use only, and may only be used in accordance with the AIA Contract Documents® Terms of Service. To report copyright violations, e-mail docinfo@aiacontracts.com.
User Notes: (793080888)

the Contract Documents, the Owner may issue a written order to the Contractor to stop the Work, or any portion thereof, until the cause for such order has been eliminated; however, the right of the Owner to stop the Work shall not give rise to a duty on the part of the Owner to exercise this right for the benefit of the Contractor or any other person or entity, except to the extent required by Section 6.1.3. This right shall be in addition to the Owner's other rights under the Contract Documents and common law. The exercise of the Owner's right to stop the Work shall not relieve the Contractor of any of the Contractor's responsibilities and obligations under the Contract Documents.

§ 2.5 Owner's Right to Carry Out the Work

§ 2.5.1 If the Contractor defaults on any obligation imposed by the Contract Documents or neglects to carry out the Work within the construction schedule or in accordance with the Contract Documents and fails within a ten-day period after receipt of notice from the Owner to commence and continue correction of such default or neglect with diligence and promptness, the Owner may, without prejudice to other remedies the Owner may have, take any action necessary to mitigate or correct such default or neglect, including removal of non-conforming Work and disposal of excess materials, and may charge the Contractor for the cost of doing so. The Owner does not become the Contractor's bailee by exercising rights granted by this Section 2.5. The Architect may, pursuant to Section 9.5.1, withhold or nullify a Certificate for Payment in whole or in part, to the extent necessary to reimburse the Owner for the cost of mitigating or correcting such deficiencies, including Owner's expenses and compensation for professional fees and the Architect's additional services made necessary by such default, neglect, or failure. If current and future payments are not sufficient to cover such amounts, the Contractor shall pay the difference to the Owner. If the Contractor disagrees with the actions of the Owner or the Architect, or the amounts claimed as costs to the Owner, the Contractor may file a Claim pursuant to Article 15.

§ 2.5.2 Upon notification to the Contractor, the Owner shall have the right to place and install equipment and machinery during the progress of the Work before the completion of the various parts of the Work. Such placing and installing of equipment and machinery shall not in any way evidence the completion of the Work or any portion thereof by the Contractor, nor signify the Owner's acceptance of the Work or any portion thereof. If the Owner places or installs such equipment and machinery with its own forces, the Owner shall be responsible for any damage to Work of the Contractor caused by the Owner's workers. If the Owner engages another contractor for such placement or installation, the Owner shall require said contractor to be responsible for such damages caused by its work, its workers, or its subcontractor. Upon discovery of any such damage, the Contractor shall have the right to request and file a Contractor's Request Change Order under Section 7.5.

§ 2.6 Limitation on the Owner's Responsibility

§ 2.6.1 The Owner, Architect, and Owner's Representative Consultant do not have control over or charge of and are not responsible for construction means, methods, techniques, sequences or procedures, or for safety precautions and programs in connection with the Work, since these are solely the Contractor's responsibility. The Owner, Architect, and Owner's Representative Consultant are not responsible for the Contractor's failure to perform Work in accordance with the Contract Documents. The Owner, Architect, and Owner's Representative Consultant do not have control over or charge of and are not responsible for acts or omissions of any member of the Construction Team.

§ 2.6.2 The Contractor shall only be entitled to rely upon instructions and directions provided in writing by the Owner's authorized representative(s).

§ 2.6.3 From time to time the Owner may review or take action on the Contractor's Shop Drawings, Product Data, Samples, and other submittals and may review, observe, or take other appropriate action concerning the Work and the selection of the Construction Team. However, such activities by the Owner do not alter or relieve the Contractor or the Architect of their obligations under the Contract Documents unless memorialized in a Modification.

ARTICLE 3 CONTRACTOR

§ 3.1 General

§ 3.1.1 The Contractor is the person or entity identified as such in the Agreement and is referred to throughout the Contract Documents as if singular in number. The Contractor shall be lawfully licensed, if required in the jurisdiction where the Project is located. The Contractor shall designate in writing a representative who shall have express authority to bind the Contractor with respect to all matters under this Contract. The term "Contractor" means the Contractor or the Contractor's authorized representative.

AIA Document A201 – 2017. Copyright © 1911, 1915, 1918, 1925, 1937, 1951, 1958, 1961, 1963, 1966, 1970, 1976, 1987, 1997, 2007 and 2017. All rights reserved. "The American Institute of Architects," "American Institute of Architects," "AIA," the AIA Logo, and "AIA Contract Documents" are trademarks of The American Institute of Architects. This draft was produced at 12:48:57 ET on 03/03/2025 under Order No.3104239075 which expires on 06/30/2025, is not for resale, is licensed for one-time use only, and may only be used in accordance with the AIA Contract Documents® Terms of Service. To report copyright violations, e-mail docinfo@aiacontracts.com.
User Notes: (793080888)

§ 3.1.2 The Contractor shall perform the Work in strict accordance with the Contract Documents and current Applicable Law.

§ 3.1.3 The Contractor shall not be relieved of its obligations to perform the Work in accordance with the Contract Documents either by activities or duties of the Architect in the Architect's administration of the Contract, or by tests, inspections or approvals required or performed by persons or entities other than the Contractor.

§ 3.1.4 Unless the Contract Documents provide otherwise for a specific circumstance, the Contractor bears the risk of loss to the Work until it, or the relevant portion of it, has been accepted as substantially complete. Thereafter, a Certificate of Substantial Completion accepted by the Owner under Section 9.8 or 9.9 shall assign the risk of loss. This Section 3.1.4 does not prevent the Contractor from recovering sums paid by the applicable property insurer for loss to the Work, after the Contractor has satisfied the deductible associated with such payment.

§ 3.2 Review of Contract Documents and Field Conditions by Contractor

§ 3.2.1 Execution of the Contract by the Contractor is a representation that the Contractor has visited the site, is familiar with the conditions under which the Work is to be performed, and has correlated personal observations with requirements of the Contract Documents. Prior to establishing the Contract Sum, Guaranteed Maximum Price, or Contract Time, the Contractor and the Construction Team have evaluated and satisfied themselves as to the conditions and limitations under which the Work is to be performed, including, without limitation, (i) the location, condition, layout, history, and nature of the Project site and surrounding areas, (ii) generally prevailing climatic conditions, (iii) anticipated labor supply and costs, (iv) availability and cost of materials, tools and equipment, and (v) other similar issues. The Owner has no responsibility or liability under this Agreement for the physical condition or safety of the Project site or any improvement on the Project site. Except as provided under Section 10.3, the Contractor shall be solely responsible for providing a safe place for the performance of the Work. Except as permitted by Sections 3.2.4 and 3.7.4, the Contract Sum and Contract Time shall not be adjusted because of existing conditions affecting the Work.

§ 3.2.1.1 The Contractor shall perform all reasonable and customary non-destructive field investigation activities to the extent necessary to develop an informed understanding of the Project's existing conditions necessary to deliver the project within the Owner's anticipated design and construction milestone dates and budget for the Cost of the Work. The Contractor's field investigation activities shall include, but not be limited to, meeting with the Owner's facility and maintenance staff to review the applicable systems and known conditions. The Contractor shall provide Owner prompt written notice should it become aware of any reason why additional investigation of the existing conditions is warranted to develop the necessary informed understanding of the Project's existing conditions.

§ 3.2.1.2 The exactness of grades, elevations, dimensions, or locations of existing conditions given on any Drawings issued by the Architect, or work installed by other contractors, is not guaranteed by the Architect or the Owner. The Contractor shall, therefore, satisfy itself as to the accuracy of all grades, elevations, dimensions, and locations. In all cases of interconnection of its Work with existing or other work, the Contractor shall verify at the site all dimensions relating to such existing or other work. Any errors due to the Contractor's failure to so verify all such grades, elevations, dimensions or locations shall be promptly rectified by the Contractor without any additional cost to the Owner or change in Contract Time.

§ 3.2.2 Because the Contract Documents are complementary, the Contractor shall, before submitting pricing or estimates and/or starting each portion of the Work, carefully study and compare the various Contract Documents relative to that portion of the Work, as well as the information furnished by the Owner pursuant to Section 2.3.4, shall take field measurements of any existing conditions related to that portion of the Work, and shall observe any conditions at the site affecting it. These obligations are for the purpose of facilitating coordination and construction by the Contractor and for the purpose of discovering errors, omissions, or inconsistencies in the Contract Documents. The Contractor shall promptly report to the Architect any errors, inconsistencies or omissions discovered by or made known to the Contractor as a request for information in such form as the Architect may require. However, it is recognized that the Contractor's review is made in the Contractor's capacity as a contractor and not as a licensed design professional, unless the Contract Documents delegate design for that portion of the Work to the Contractor. Contractor's failure to report to and requesting information clarifying such errors, ambiguities, inconsistencies or omissions from the Architect shall result in interpretation of and resolving such errors, ambiguities, inconsistencies or omissions in favor of the Owner.

AIA Document A201 – 2017. Copyright © 1911, 1915, 1918, 1925, 1937, 1951, 1958, 1961, 1963, 1966, 1970, 1976, 1987, 1997, 2007 and 2017. All rights reserved. "The American Institute of Architects," "American Institute of Architects," "AIA," the AIA Logo, and "AIA Contract Documents" are trademarks of The American Institute of Architects. This draft was produced at 12:48:57 ET on 03/03/2025 under Order No.3104239075 which expires on 06/30/2025, is not for resale, is licensed for one-time use only, and may only be used in accordance with the AIA Contract Documents® Terms of Service. To report copyright violations, e-mail docinfo@aiacontracts.com.
User Notes: (793080888)

§ 3.2.3 With the exception of Contractor-designed Work, the Contractor is not required to ascertain that the Contract Documents are in accordance with Applicable Law, but the Contractor shall promptly report to the Architect any nonconformity discovered by or made known to the Contractor as a request for information in such form as the Architect may require.

§ 3.2.4 If the Contractor believes that additional cost or time is involved because of clarifications or instructions the Architect issues in response to the Contractor's notices or requests for information pursuant to Sections 3.2.2 or 3.2.3, the Contractor shall request a Change Order under Section 7.5 or submit Claims as provided in Article 15, as applicable. If the Contractor fails to perform the obligations of Sections 3.2, the Contractor releases its right to any claim of increase in the Contract Sum and Contract Time and shall pay such costs and damages to the Owner, subject to Section 15.1.7, as would have been avoided if the Contractor had performed such obligations. If the Contractor performs those obligations, the Contractor shall not be liable to the Owner or Architect for damages resulting from errors, inconsistencies or omissions in the Contract Documents, for differences between field measurements or conditions and the Contract Documents, or for nonconformities of the Contract Documents to applicable laws, statutes, ordinances, codes, rules and regulations, and lawful orders of public authorities.

§ 3.2.5 If the Contractor encounters concealed or unknown conditions that differ from those anticipated or expected in the Contract Documents, whether or not it is entitled to assert a Claim under Section 3.7.4, the Contractor shall promptly notify the Owner and Architect, as required in Section 3.7.4**,** in writing of such conditions so that the Architect and Owner can determine if such conditions revision to the Contract Documents or some other remedial action. The Contractor's failure to provide the required notification under this Section shall constitute a waiver of any Claim for additional time or compensation for any materially different conditions as set forth in Section 3.7.4.

§ 3.3 Supervision and Construction Procedures

§ 3.3.1 The Contractor shall supervise and direct the Work, using the Contractor's best skill and attention. The Contractor shall be solely responsible for, and have control over, construction safety, means, methods, techniques, sequences, and procedures, and for coordinating all portions of the Work under the Contract. If the Contract Documents give specific instructions concerning construction means, methods, techniques, sequences, or procedures, the Contractor shall evaluate the jobsite safety thereof and shall be solely responsible for the jobsite safety of such means, methods, techniques, sequences, or procedures. If the Contractor determines that such means, methods, techniques, sequences or procedures may not be safe, the Contractor shall give timely notice to the Owner and Architect, and shall propose alternative means, methods, techniques, sequences, or procedures. The Architect shall evaluate the proposed alternative solely for conformance with the design intent for the completed construction. Unless the Architect objects to the Contractor's proposed alternative, the Contractor may perform the Work using its alternative means, methods, techniques, sequences, or procedures but shall remain responsible for the completed Work's conformance to the requirements of the Contract Documents.

§ 3.3.2 The Contractor is responsible to the Owner for all acts and omissions of the Construction Team..

§ 3.3.3 The Contractor shall inspect the Work as it is being performed until final completion and acceptance of the Project by the Owner to assure that the Work performed and the materials furnished are in accordance with the Contract Documents and that Work on the Project is progressing on schedule. In the event that the quality control testing should indicate that the Work, as installed, does not meet the requirements of the Project, the Architect shall determine the extent of the Work that does not meet the requirements and the Contractor shall take appropriate corrective action, and advise the Owner of the corrective action.

§ 3.4 Labor, Materials, Utilities, and Facilities

§ 3.4.1 Unless otherwise provided in the Contract Documents, the Contractor shall provide and pay for all labor, materials, equipment, tools, construction equipment and machinery, water, heat, utilities, transportation, and other facilities and services necessary for proper execution and completion of the Work, whether temporary or permanent and whether or not incorporated or to be incorporated in the Work.

§ 3.4.1.1 The Contractor shall provide and maintain all temporary facilities in clean and sanitary condition acceptable to the Owner. The Construction Team may not use facilities in the building under construction or in other buildings on or near the Project site without the Owner's written permission.

AIA Document A201 – 2017. Copyright © 1911, 1915, 1918, 1925, 1937, 1951, 1958, 1961, 1963, 1966, 1970, 1976, 1987, 1997, 2007 and 2017. All rights reserved. "The American Institute of Architects," "American Institute of Architects," "AIA," the AIA Logo, and "AIA Contract Documents" are trademarks of The American Institute of Architects. This draft was produced at 12:48:57 ET on 03/03/2025 under Order No.3104239075 which expires on 06/30/2025, is not for resale, is licensed for one-time use only, and may only be used in accordance with the AIA Contract Documents® Terms of Service. To report copyright violations, e-mail docinfo@aiacontracts.com.
User Notes: (793080888)

§ 3.4.2 Except in the case of minor changes in the Work approved by the Architect in accordance with Section 3.12.8 or ordered by the Architect in accordance with Section 7.4, the Contractor may make substitutions only with the consent of the Owner, after evaluation by the Architect and in accordance with a Change Order or Construction Change Directive. The Contractor will provide any information requested by the Architect related to its evaluation of a proposed substitution.

§ 3.4.2.1 By making requests for substitutions based on Subparagraph 3.4.2 above, the Contractor:

- **.1** represents it has personally investigated the proposed substitute product and determined that the substitution is equal or superior in all respects to that which is specified;
- **.2** represents it will provide the same warranty for the substitution that the Contractor would have provided for that which is specified;
- **.3** certifies it presented any all costs or savings to the Owner associated with the requested substitutions and that the cost data presented, is complete, and includes all related costs, including but not limited to, the Architect's redesign costs and waives all Claims for additional costs related to the substitution that subsequently become apparent; and
- **.4** will coordinate the installation of the accepted substitute, making such changes as may be required for the Work to be completed in all respects.

§ 3.4.3 The Contractor shall enforce strict discipline and good order among the Contractor's employees and other persons carrying out the Work. The Contractor shall not permit employment of unfit persons or persons not properly skilled in tasks assigned to them.

§ 3.4.3.1 The Contractor shall only employ labor on the Project or in connection with the Work capable of working harmoniously with all trades, crafts, and any other contractors and individuals associated with the Project. The Contractor shall proactively minimize the likelihood of any strike, work stoppage, or other labor disturbance. Wherever applicable, the Contractor shall make all necessary arrangements to reconcile, without delay, damage or cost to the Owner and without recourse to the Architect or the Owner, any conflict between the Contract Documents and any agreements or regulations of any kind which regulate, control or distinguish what activities shall or shall not be included in the work of any particular trade.

§ 3.4.4 The Contractor shall coordinate the Work with the owners of known and ascertainable public and private utilities and shall relocate service lines and construct by-passes as needed to perform the Work. The Contractor shall protect all known or ascertainable utilities from its activities and shall promptly remedy all damage it cause them, without an increase in the Contract Sum and Contract Time. In the event the Contract Documents require the Owner to coordinate a specific utility it does not own or control, the Owner shall only be obligated to make reasonable efforts to do so.

§ 3.4.4.1 To the extent practical, the Contractor may tie into the Owner's existing water, power, natural gas, and steam utilities without charge as to any usage in connection with the Work. In the event the Work occurs in an occupied building or facility, the Contractor shall give the Owner timely notice of its need for such services and the Owner shall make arrangements for the connection or activation.

§ 3.4.5 The Contractor shall permit the Owner, Architect, and representatives of governmental authorities to inspect and test the Work and shall account for such inspection and testing in its schedules.

§ 3.4.6 To the extent practicable, materials and equipment will be delivered to the Project site in original containers or wrappings. The Architect and the Owner have no obligation to inspect materials and equipment, but they may do so and may reject those that do not conform to the Contract Documents. The Architect or Owner's acceptance of non-conforming materials and equipment is only effective if done in a writing that expressly waives the non-conformity.

§ 3.4.7 There shall be no offsite storage of materials or equipment without the Owner's prior written consent in each instance. If the Owner consents to offsite storage, the Contractor shall meet the following criteria when storing materials and equipment stored offsite:

- **.1** Title to materials and equipment shall be vest with the Owner upon payment under Section 9.3.2, and shall be documented as reasonably requested by the Owner;
- **.2** All materials and equipment shall be insured for no less than the total replacement value;

AIA Document A201 – 2017. Copyright © 1911, 1915, 1918, 1925, 1937, 1951, 1958, 1961, 1963, 1966, 1970, 1976, 1987, 1997, 2007 and 2017. All rights reserved. "The American Institute of Architects," "American Institute of Architects," "AIA," the AIA Logo, and "AIA Contract Documents" are trademarks of The American Institute of Architects. This draft was produced at 12:48:57 ET on 03/03/2025 under Order No.3104239075 which expires on 06/30/2025, is not for resale, is licensed for one-time use only, and may only be used in accordance with the AIA Contract Documents® Terms of Service. To report copyright violations, e-mail docinfo@aiacontracts.com.
User Notes: (793080888)

.3 Components must be assembled into completed units unless the Owner has given written permission otherwise;

.4 The Architect and Owner may inspect the storage area, materials, and equipment at any reasonable time; and

.5 The materials and equipment shall be (i) protected from diversion, destruction, theft, and damage, (ii) specifically marked for use in the Work, and (iii) segregated from other materials at the storage facility.

§ 3.5 Warranty

§ 3.5.1 The Contractor warrants to the Owner and Architect that materials and equipment furnished under the Contract will be of good quality and new unless the Contract Documents require or permit otherwise. The Contractor further warrants that the Work will conform to the requirements of the Contract Documents and will be free from defects, except for those inherent in the quality of the Work the Contract Documents require or permit. Work, materials, or equipment not conforming to these requirements may be considered defective. The Contractor's warranty excludes remedy for damage or defect caused by abuse, alterations to the Work not executed by the Contractor, improper or insufficient maintenance, improper operation, or normal wear and tear and normal usage. If required by the Architect, the Contractor shall furnish satisfactory evidence as to the kind and quality of materials and equipment.

§ 3.5.2 All material, equipment, or other special warranties required by the Contract Documents shall be issued in the name of the Owner, or shall be transferable to the Owner, and shall commence in accordance with Section 9.8.4.

§ 3.5.3 All written warranties shall be in the form and shall contain the terms required by the Contract Documents.

§ 3.5.4 Contractor and Subcontractors' Warranty Acknowledgment.

The Contractor's submission of a Certificate of Substantial Completion constitutes the acknowledgment and delivery of the following Warranty Acknowledgement. Upon request by the Owner, the Contractor shall provide the Owner a separate signed copy of the following Warranty Acknowledgement. Additionally, the Contractor shall cause members of the Construction Team giving warranties that are contractually bound to the Contractor to execute and deliver to the Owner, the following Warranty Acknowledgment prior to or with the submission of a Final Application for Payment:

Warranty Acknowledgment:

> (Contractor Name or Name of Subcontractor) ("Contractor") warrants that all of its Work complies with the requirements of the Contract Documents. If, within two (2) years after the date of Substantial Completion of the Work or designated portion of the Work, any of Contractor's Work is found to be not in accordance with the requirements of the Contract Documents, Contractor shall correct the Work at its sole expense promptly after receipt of written notice from the Owner. This two (2) year period shall be extended (i) with respect to portions of Work first performed after Substantial Completion by the period of time between Substantial Completion and the actual performance of Contractor's Work, and (ii) with respect to warranty work for an additional two (2) year period following each correction. This obligation shall survive acceptance of the Work and termination of the Contract.

This Warranty shall be in addition to, and not in lieu of, the terms of any other warranty or longer period of obligation specified in the Contract Documents, any applicable special warranty required by the Contract Documents, or the terms of any other warranty provided to the Owner. Neither this warranty, nor any other warranty, shall be construed to establish a period of limitation with respect to other obligations which Contractor might have under the Contract Documents and has no relationship to the time within which the obligation to comply with the Contract Documents may be sought to be enforced or to the time which any proceeding may be commenced.

§ 3.5.5 Post-Occupancy Assessment.

As part of the Contractor's Work, the Contractor shall conduct a post-occupancy assessment eleven (11) months and twenty-two (22) months following the Date of Substantial Completion to assist the Owner in identifying and correcting non-conforming or faulty Work.

AIA Document A201 – 2017. Copyright © 1911, 1915, 1918, 1925, 1937, 1951, 1958, 1961, 1963, 1966, 1970, 1976, 1987, 1997, 2007 and 2017. All rights reserved. "The American Institute of Architects," "American Institute of Architects," "AIA," the AIA Logo, and "AIA Contract Documents" are trademarks of The American Institute of Architects. This draft was produced at 12:48:57 ET on 03/03/2025 under Order No.3104239075 which expires on 06/30/2025, is not for resale, is licensed for one-time use only, and may only be used in accordance with the AIA Contract Documents® Terms of Service. To report copyright violations, e-mail docinfo@aiacontracts.com.
User Notes: (793080888)

§ 3.6 Taxes
The Contractor shall pay sales, consumer, commercial activities, local business, use, and similar taxes for the Work provided by the Contractor that are legally enacted when bids are received or negotiations concluded, whether or not yet effective or merely scheduled to go into effect.

§ 3.7 Permits, Fees, Notices and Compliance with Laws
§ 3.7.1 Unless otherwise provided in the Contract Documents, the Contractor shall secure and pay for the building permit as well as for other permits, trade permits, fees, licenses, connection fees, municipal performance bonds and inspections by government agencies necessary for proper execution and completion of the Work that are customarily secured after execution of the Contract and legally required at the time bids are received or negotiations concluded. All such fees are included in the Contract Sum.

§ 3.7.2 The Contractor shall ascertain the applicability of, comply with, and give notices required by Applicable Laws, and lawful orders and all other requirements of public authorities pertaining to performance of the Work.

§ 3.7.2.1 Nondiscrimination. The Contractor shall meet or exceed all requirements under Applicable Law to prevent discrimination.
Additionally, in accordance with MCL 37.2209, the Project Team covenants not to discriminate against an employee or applicant for employment with respect to hire, tenure, terms, conditions, or privileges of employment, or a matter directly or indirectly related to employment, because of race, color, religion, national origin, age, sex, sexual orientation, gender identity or expression, height, weight, or marital status. Breach of this covenant may be regarded as a material breach of their respective agreement with the Owner.

§ 3.7.2.2 The Contractor is responsible for the Construction Team's compliance with all Applicable Law including, but not limited to, those related to the employment or utilization of the Construction Team's workforce to carry out the Work. Accordingly, the Contractor is responsible that policies and procedures in place to ensure the Construction Team's compliance with Applicable Laws with regard to the Work.

§ 3.7.2.3 The Contractor will provide any verified information, certification, or assurance of compliance with Applicable Law that may be requested by Owner or any public authority. The Contractor will obtain this information from members of the Construction Team upon request by the Owner.

§ 3.7.3 If the Contractor performs Work contrary to Applicable Law, the Contractor shall assume appropriate responsibility for such Work and shall bear the costs attributable to correction. To the fullest extent permitted by law, the Contractor shall defend, indemnify, and hold harmless the Owner, Owner's Representative Consultant, Architect, Architect's consultants, and agents and employees of any of them from and against claims, damages, losses, liabilities, and expenses, including but not limited to professional and attorneys' fees, arising out of or resulting from its and the Construction Team's activities or performance of the Work in violation of Appliable Law. Such obligation shall not be construed to negate, abridge, or reduce other rights or obligations of indemnity that would otherwise exist as to a party or person described in this Section 3.18.

§ 3.7.4 Concealed or Unknown Conditions
If the Contractor encounters conditions at the site that are unknown and: (1) subsurface or otherwise concealed physical conditions that differ materially from those described in the Contract Documents; (2) of an unusual nature that differ materially from those ordinarily found to exist and generally recognized as inherent in construction activities of the character provided for in the Contract Documents; and (3) not the Contractor's responsibility to ascertain under the Contract Documents, the Contractor shall promptly provide notice to the Owner and the Architect before conditions are disturbed and in no event later than five (5) days after first observance of the conditions. Only if the condition encountered meet the above requirements, if the Contractor has provided notice as required in this Section 3.7.4, and if the Contractor has fulfilled its obligations under Section 3.2, may the Contractor be entitled to an adjustment in the Contract Time or Contract Sum resulting from concealed or unknown conditions. The Architect will promptly investigate such conditions and, if the Architect determines that they differ materially and cause an increase or decrease in the Contractor's cost of, or time required for, performance of any part of the Work, will recommend that an equitable adjustment be made in the Contract Sum or Contract Time, or both. If the Architect determines that the conditions at the site are not materially different from those indicated in the Contract Documents and that no change in the terms of the Contract is justified, the Architect shall promptly notify the Owner and Contractor, stating the reasons. If either party disputes the Architect's determination or recommendation,

AIA Document A201 – 2017. Copyright © 1911, 1915, 1918, 1925, 1937, 1951, 1958, 1961, 1963, 1966, 1970, 1976, 1987, 1997, 2007 and 2017. All rights reserved. "The American Institute of Architects," "American Institute of Architects," "AIA," the AIA Logo, and "AIA Contract Documents" are trademarks of The American Institute of Architects. This draft was produced at 12:48:57 ET on 03/03/2025 under Order No.3104239075 which expires on 06/30/2025, is not for resale, is licensed for one-time use only, and may only be used in accordance with the AIA Contract Documents® Terms of Service. To report copyright violations, e-mail docinfo@aiacontracts.com.
User Notes: (793080888)

that party may submit a Claim as provided in Article 15; except the Contractor will have released its right to an increase in the Contract Sum and Contract Time if it fails to follow the notice requirements of this Section 3.7.4.

§ 3.7.5 If, in the course of the Work, the Contractor encounters human remains or recognizes the existence of burial markers, archaeological sites or wetlands not indicated in the Contract Documents, the Contractor shall immediately suspend any operations that would affect them and shall notify the Owner and Architect. Upon receipt of such notice, the Owner shall promptly take any action necessary to obtain governmental authorization required to resume the operations. The Contractor shall continue to suspend such operations until otherwise instructed by the Owner but shall continue with all other operations that do not affect those remains or features. Requests for adjustments in the Contract Sum and Contract Time arising from the existence of such remains or features may be made as provided in Article 15.

§ 3.8 Allowances

§ 3.8.1 The Contractor shall include in the Contract Sum all allowances stated in the Contract Documents. Items covered by allowances shall be supplied for such amounts and by such persons or entities as the Owner may direct, but the Contractor shall not be required to employ persons or entities to whom the Contractor has reasonable objection. Any allowances, including any Subcontractor allowances, shall be approved by the Owner in writing and allowance funds may only be used for the established specific purpose, whether it be to address a specific unquantifiable issue or specific type potential unknown conduction.

§ 3.8.2 Unless otherwise provided in the Contract Documents,

- **.1** allowances shall cover the cost to the Contractor of materials and equipment delivered at the site and all required taxes, less applicable trade discounts;
- **.2** Contractor's costs for unloading and handling at the site, labor, installation costs, overhead, profit, and other expenses contemplated for stated allowance amounts shall be included in the Contract Sum but not in the allowances;
- **.3** whenever costs are more than or less than allowances, the Contract Sum may be adjusted accordingly by Change Order in the difference between actual costs and the allowance; and
- **.4** Once the scope of the Work for which an allowance was established is complete, the Contractor shall sign a Change Order returning any and all remaining allowance funds to the Owner.

§ 3.8.3 Materials and equipment under an allowance shall be selected by the Owner with reasonable promptness.

§ 3.9 Superintendent

§ 3.9.1 The Contractor shall employ a competent superintendent and necessary assistants who shall be in attendance at the Project site during performance of the Work. The superintendent shall represent the Contractor, and communications given to the superintendent shall be as binding as if given to the Contractor.

§ 3.9.2 The Contractor, as soon as practicable after award of the Contract, shall notify the Owner and Architect of the name and qualifications of a proposed superintendent. Within 14 days of receipt of the information, the Architect may notify the Contractor, stating whether the Owner or the Architect (1) has reasonable objection to the proposed superintendent or (2) requires additional time for review. Failure of the Architect to provide notice within the 14-day period shall constitute notice of no reasonable objection.

§ 3.9.3 The Contractor shall not employ a proposed superintendent to whom the Owner or Architect has made reasonable and timely objection. The Contractor shall not change the superintendent without the Owner's consent, which shall not unreasonably be withheld or delayed.

§ 3.10 Contractor's Construction and Submittal Schedules

§ 3.10.1 The Contractor, promptly after being awarded the Contract or with its Guaranteed Maximum Price proposal, as applicable, shall submit for the Owner's and Architect's information a Contractor's construction schedule for the Work. The schedule shall reflect the Contractor's intended approach to the execution of and completion of the Work. The schedule shall provide for the orderly progression of the Work to completion, and shall not exceed milestone and Substantial Completion time current limits current under the Contract Documents.

§ 3.10.2 The Contractor, promptly after being awarded the Contract and thereafter as necessary to maintain a current submittal schedule, shall submit a submittal schedule for the Architect's approval. The Architect's approval shall not

AIA Document A201 – 2017. Copyright © 1911, 1915, 1918, 1925, 1937, 1951, 1958, 1961, 1963, 1966, 1970, 1976, 1987, 1997, 2007 and 2017. All rights reserved. "The American Institute of Architects," "American Institute of Architects," "AIA," the AIA Logo, and "AIA Contract Documents" are trademarks of The American Institute of Architects. This draft was produced at 12:48:57 ET on 03/03/2025 under Order No.3104239075 which expires on 06/30/2025, is not for resale, is licensed for one-time use only, and may only be used in accordance with the AIA Contract Documents® Terms of Service. To report copyright violations, e-mail docinfo@aiacontracts.com.
User Notes: (793080888)

be unreasonably delayed or withheld. The submittal schedule shall (1) be coordinated with the Contractor's construction schedule, and (2) allow the Architect reasonable time to review submittals. If the Contractor fails to submit a submittal schedule, or fails to provide submittals in accordance with the approved submittal schedule, the Contractor shall not be entitled to any increase in Contract Sum or extension of Contract Time based on the time required for review of submittals.

§ 3.10.3 The construction schedule shall be in a detailed critical path method (CPM) format satisfactory to the Owner and Architect and shall: (i) graphically depict the coordination and sequence of all activities and events planned to occur during performance of the Work; (ii) identify each phase of construction and occupancy and (iii) include milestone and Substantial Completion dates. The construction schedule shall be broken into work areas to provide for a clear identification of the planned progress of the Work. Unless it is impractical, the duration of each activity shall not be greater than 30 calendar days. The construction schedule shall make reasonable allowance for delays caused by such things as labor scarcity, weather, local jurisdictional work restrictions, and building official inspections and shall depict the following:

- **.1** Work durations in calendar days;
- **.2** restrictions and constraints stated in the Contract Documents;
- **.3** milestone and other intermediate completion dates set by the Contract Documents;
- **.4** actual start and finish dates and remaining durations for each activity;
- **.5** reasonable time for needed approvals by the Owner, Architect, or other agency or authority;
- **.6** reasonable time for Owner, Architect, or other agency or authority inspections and/or tests where required by the Contract Documents;
- **.7** the work of separate contractors or the Owner;
- **.8** a legend for each report or chart which clearly identifies how to interpret each;
- **.9** any phasing of activities or sequences that are needed to complete the Work; and
- **.10** fabrication and/or ordering activities for critical or long lead materials for the Project.

§ 3.10.4 In management of the construction schedule, the Contractor shall:

- **.1** meet at least bi-weekly with the persons providing labor or materials under each trade package to review their progress and take appropriate action to maintain the construction schedule;
- **.2** update the construction schedule with the current status of the Work and the Contractor's plan for completing it (i) monthly to compare actual progress with projected progress; (ii) within seven days of an event that impacts the critical path, (iii) monthly updates shall be submitted with the pay application and (iv) at any other reasonable time if requested by the Owner;
- **.3** develop recovery schedules when critical path, milestone, or Substantial Completion dates are or may be at risk of being missed;
- **.4** not place Owner activities on the critical path without its approval;
- **.5** with its submission of the baseline schedule and with each update, provide the Owner and Architect with a narrative describing the Project's progress, Project challenges, any impacts to critical and near-critical path activities, if any, and the Contractor's forecast of upcoming Work;
- **.6** provide the Owner with copies of the schedule and all updates in their native electronic format; and
- **.7** submit copy of the final, as-built construction schedule to the Owner upon final completion of the Work.

§ 3.10.5 Durations of activities for the Owner's forces and the Owner's Separate Contractors on the Contractor's construction schedule are not binding on the Owner unless they have been accepted in writing.

§ 3.10.6 Because schedule float is a resource to be shared for the benefit of the Project, the Owner or the Contractor may use float as it may be available.

§ 3.10.7 The Owner's or the Architect's review of the Contractor's schedules shall not constitute or imply the acceptance of them or relieve the Contractor of responsibility for the means, methods, sequences, techniques or procedures used in the performance of the Work.

§ 3.11 Documents and Samples at the Site

The Contractor shall make available, at the Project site, the Contract Documents, including Change Orders, Construction Change Directives, and other Modifications, in good order and marked currently to indicate field changes and selections made during construction, and the approved Shop Drawings, Product Data, Samples, and

AIA Document A201 – 2017. Copyright © 1911, 1915, 1918, 1925, 1937, 1951, 1958, 1961, 1963, 1966, 1970, 1976, 1987, 1997, 2007 and 2017. All rights reserved. "The American Institute of Architects," "American Institute of Architects," "AIA," the AIA Logo, and "AIA Contract Documents" are trademarks of The American Institute of Architects. This draft was produced at 12:48:57 ET on 03/03/2025 under Order No.3104239075 which expires on 06/30/2025, is not for resale, is licensed for one-time use only, and may only be used in accordance with the AIA Contract Documents® Terms of Service. To report copyright violations, e-mail docinfo@aiacontracts.com.
User Notes: (793080888)

similar required submittals. These shall be in electronic form or paper copy, available to the Architect and Owner, and delivered to the Architect for submittal to the Owner upon completion of the Work as a record of the Work as constructed.

§ 3.12 Shop Drawings, Product Data and Samples

§ 3.12.1 Shop Drawings are drawings, diagrams, schedules, and other data specially prepared for the Work by the Contractor or a Subcontractor, Sub-subcontractor, manufacturer, supplier, or distributor to illustrate some portion of the Work.

§ 3.12.2 Product Data are illustrations, standard schedules, performance charts, instructions, brochures, diagrams, and other information furnished by the Contractor to illustrate materials or equipment for some portion of the Work.

§ 3.12.3 Samples are physical examples that illustrate materials, equipment, or workmanship, and establish standards by which the Work will be judged.

§ 3.12.4 Shop Drawings, Product Data, Samples, and similar submittals are not Contract Documents. Their purpose is to demonstrate how the Contractor proposes to conform to the information given and the design concept expressed in the Contract Documents for those portions of the Work for which the Contract Documents require submittals. Review by the Architect is subject to the limitations of Section 4.2.7. Informational submittals upon which the Architect is not expected to take responsive action may be so identified in the Contract Documents. Submittals that are not required by the Contract Documents may be returned by the Architect without action.

§ 3.12.5 The Contractor shall review for compliance with the Contract Documents, approve, and submit to the Architect, Shop Drawings, Product Data, Samples, and similar submittals required by the Contract Documents, in accordance with the submittal schedule approved by the Architect or, in the absence of an approved submittal schedule, with reasonable promptness and in such sequence as to cause no delay in the Work or in the activities of the Owner or of Separate Contractors.

§ 3.12.6 The Contractor is responsible for the content of all submittals. By submitting Shop Drawings, Product Data, Samples, and similar submittals, the Contractor represents to the Owner and Architect that the Contractor has (1) reviewed and approved them, (2) determined and verified materials, field measurements and field construction criteria related thereto, or will do so, (3) checked and coordinated the information contained within such submittals with the requirements of the Work and of the Contract Documents, and (4) confirmed constructability of the Work described in them. The Contractor's submittals shall clearly identify both the person who undertook the review required by this Section 3.12 and the date of the submittal's transmittal to the Architect.

§ 3.12.6.1 The Contractor shall develop and keep current a submittal log that is coordinated with the submittal and construction schedules.

§ 3.12.6.2 Submittals describing manufactured equipment must be clearly marked to fully define the intended model number, configuration, and other applicable product information.

§ 3.12.6.3 The Contractor shall notify the Owner and the Architect in writing if any submittals describe Work that diverges from the requirements of the Contract Documents. The notice shall identify each and every divergence.

§ 3.12.6.4 The Contractor shall furnish to the Architect for review when requested, or when required by the Contract Documents, Samples of all materials and finishes to be used in the execution of the Work. Such Samples shall be of sufficient size to be representative and the required number of them shall be submitted before the Work utilizing the materials they exemplify is commenced and in ample time to permit examination thereof.

§ 3.12.6.5 The Architect and Contractor will establish and adhere to the procedures and requirements for the timing, transmission, and review of Submittals, Samples, and Shop Drawings. No such protocols agreed upon by the Architect and Contractor shall in anyway relieve the Architect or any member of the Construction Team of any obligations or duty to the Owner, impose any obligation upon the Owner, nor give rise to any Additional Services of the Architect or any change to the Contract Sum or Contract Time. The Contractor and Architect shall be responsible for the costs of their failure to adhere to the established protocols. Failure by the Contractor to submit a Submittal, Sample, or Shop Drawing in conformance with the established protocols, or to document the agreed up

AIA Document A201 – 2017. Copyright © 1911, 1915, 1918, 1925, 1937, 1951, 1958, 1961, 1963, 1966, 1970, 1976, 1987, 1997, 2007 and 2017. All rights reserved. "The American Institute of Architects," "American Institute of Architects," "AIA," the AIA Logo, and "AIA Contract Documents" are trademarks of The American Institute of Architects. This draft was produced at 12:48:57 ET on 03/03/2025 under Order No.3104239075 which expires on 06/30/2025, is not for resale, is licensed for one-time use only, and may only be used in accordance with the AIA Contract Documents® Terms of Service. To report copyright violations, e-mail docinfo@aiacontracts.com.
User Notes: (793080888)

on timeframe for response and the timing of the submission and response, shall constitute a waiver of any claim for change in the Contract Time or Contract Sum resulting from the Architect's delayed review or response to a Submittal, Sample, Shop Drawing.

§ 3.12.6.6 The Contractor shall review the Architect's comments on submittals that have been returned, may seek clarification through a request for information if necessary, or, if the Contractor concurs, shall make such corrections and re-submit the submittal. When noted on the submittals or requested by the Architect, the Contractor shall resubmit corrected submittals to the Architect for final check and review. The Contractor shall direct specific attention, in an attached writing or on the resubmitted Shop Drawings, Product Data, Samples, or similar submittals, to revisions other than those requested by the Architect on previous submittals. In the absence of such notice, the Architect's review of a resubmission shall not apply to such revisions.

§ 3.12.6.7 Except for minor changes of Work expressly authorized by the Architect in writing, the Architect's approval, corrections, or comments on submittals do not constitute a Modification. In the event the Contractor believes the Architect's corrections or comments on submittals effect a change in the Work, the Contractor shall submit notice pursuant to Section 7.5 before implementing the corrections or comments.

§ 3.12.7 The Contractor shall perform no portion of the Work for which the Contract Documents require submittal and review of Shop Drawings, Product Data, Samples, or similar submittals, until the Architect has completed its review of the respective submittal.

§ 3.12.8 The Work shall be in accordance with submittals for which the Architect's review has been completed; except that the Contractor shall not be relieved of responsibility for deviations from the requirements of the Contract Documents by the Architect's review or approval of Shop Drawings, Product Data, Samples, or similar submittals, unless the Contractor has specifically notified the Architect of such deviation at the time of submittal and (1) the Architect has given written approval to the specific deviation as a minor change in the Work, or (2) a Change Order or Construction Change Directive has been issued authorizing the deviation. The Contractor shall not be relieved of responsibility for errors or omissions in Shop Drawings, Product Data, Samples, or similar submittals, by the Architect's review or approval thereof.

§ 3.12.9 The Contractor shall direct specific attention, in writing or on resubmitted Shop Drawings, Product Data, Samples, or similar submittals, to revisions other than those requested by the Architect on previous submittals. In the absence of such notice, the Architect's approval of a resubmission shall not apply to such revisions.

§ 3.12.10 The Contractor shall not be required to provide professional services that constitute the practice of architecture or engineering unless such services are specifically required by the Contract Documents for a portion of the Work or unless the Contractor needs to provide such services in order to carry out the Contractor's responsibilities for construction means, methods, techniques, sequences, and procedures. The Contractor shall not be required to provide professional services in violation of applicable law.

§ 3.12.10.1 If professional design services or certifications by a design professional related to systems, materials, or equipment are specifically required of the Contractor by the Contract Documents, the Owner and the Architect will specify all performance and design criteria that such services must satisfy. The Contractor shall be entitled to rely upon the adequacy and accuracy of the performance and design criteria provided in the Contract Documents. The Contractor shall cause such services or certifications to be provided by an appropriately licensed design professional, whose signature and seal shall appear on all drawings, calculations, specifications, certifications, Shop Drawings, and other submittals prepared by such professional. Shop Drawings, and other submittals related to the Work, designed or certified by such professional, if prepared by others, shall bear such professional's written approval when submitted to the Architect. The Owner and the Architect shall be entitled to rely upon the adequacy and accuracy of the services, certifications, and approvals performed or provided by such design professionals, provided the Owner and Architect have specified to the Contractor the performance and design criteria that such services must satisfy. Pursuant to this Section 3.12.10, the Architect will review and approve or take other appropriate action on submittals only for the limited purpose of checking for conformance with information given and the design concept expressed in the Contract Documents.

AIA Document A201 – 2017. Copyright © 1911, 1915, 1918, 1925, 1937, 1951, 1958, 1961, 1963, 1966, 1970, 1976, 1987, 1997, 2007 and 2017. All rights reserved. "The American Institute of Architects," "American Institute of Architects," "AIA," the AIA Logo, and "AIA Contract Documents" are trademarks of The American Institute of Architects. This draft was produced at 12:48:57 ET on 03/03/2025 under Order No.3104239075 which expires on 06/30/2025, is not for resale, is licensed for one-time use only, and may only be used in accordance with the AIA Contract Documents® Terms of Service. To report copyright violations, e-mail docinfo@aiacontracts.com.
User Notes: (793080888)

§ 3.12.10.2 If the Contract Documents require the Contractor's design professional to certify that the Work has been performed in accordance with the design criteria, the Contractor shall furnish such certifications to the Architect at the time and in the form specified by the Architect.

§ 3.13 Use of Site

§ 3.13.1 The Contractor shall confine operations at the site to times of day and areas permitted by Applicable Law, lawful orders of public authorities, and the Contract Documents. To the extent reasonably possible, the Contractor shall minimize the impact of the Work on neighboring properties and shall keep public areas adjacent the site free of debris, building materials, and equipment.

§3.13.2 The Contractor shall maintain a clean and orderly site and shall not encumber it with unnecessary materials or equipment. After temporary facilities and equipment are no longer required for the Work they shall be promptly removed. The Contractor shall protect construction materials and equipment stored at the Project site from weather, theft, damage and all other casualty and bears the risk of loss to them. This Section 3.13 does not prevent the Contractor from recovering sums paid by the Owner's property insurer for their loss.

§ 3.13.3 No member of the Construction Team shall erect any sign on the Project site without the Owner's prior consent.

§ 3.13.4 The Contractor shall not, without the Owner's prior written approval, permit the Construction Team to use any existing facilities at the Project site, including, without limitation, lavatories, entrances, eating, and parking areas. The Contractor shall adhere to the Owner's site use policies and shall suggest reasonable alternatives in the event the Contractor believes those policies impact the progress of the Work. The Contractor shall restore any existing property, facility, or conditions, whether or not owned or controlled by the Owner, it uses to support its performance of the Work to the facility's pre-use condition. To the extent reasonably possible, the Contractor shall minimize the impact of its operations on such things as traffic control devices, landscaping, and other features existing on the Project site and shall restore that which is damaged by its activities.

§ 3.13.5 In the event the Work occurs in an occupied building or facility, the Contractor shall not disrupt the operation, access or use of any portion of the building or facility, any building system, or utility service without obtaining the Owner's prior written consent after having given the Owner seven days' written notice of the planned disruption. The notice shall detail the exact nature and duration of such interruption and the area affected. The Contractor's failure to comply with the notice provisions of this Section 3.13.5 is a waiver of any right to an increase in the Contract Sum and Contract Time to which the Contractor might otherwise be entitled as a result of the Owner's failure to give consent.

§ 3.13.6 The Contractor shall provide all security necessary to safeguard the building, tools, materials, and Work. In the event the Work occurs in an occupied building or facility, the Contractor shall ensure all members of the Construction Team shall cooperate with the Owner's security personnel and comply with the Owner's security requirements, which may include badging and enumeration of personnel working on site. The Owner may bar access to any individual for reasonable security reasons and may restrict the location of entries to the Work that may be used by members of the Construction Team.

§ 3.13.7 The Contractor shall control dust, smoke, noise, and fumes to avoid creation of a nuisance and to comply with Applicable Law.

§ 3.13.8 The Contractor shall take all necessary precautions to guard against and eliminate damage and disruption to the Work, the Project, and neighboring property. The Contractor's health and safety plan required by Section 10.1.2 shall include a detailed fire prevention, protection, and suppression plan that is acceptable to the Owner and complies with Applicable Law and lawful orders of public authorities. The Contractor shall coordinate with the applicable public authorities and maintain free access to the Project site for emergency equipment at all times.

§ 3.14 Cutting and Patching

§ 3.14.1 The Contractor shall be responsible for cutting, fitting, or patching required to complete the Work or to make its parts fit together properly. All areas requiring cutting, fitting, or patching shall be restored to the condition existing prior to the cutting, fitting, or patching, unless otherwise required by the Contract Documents.

AIA Document A201 – 2017. Copyright © 1911, 1915, 1918, 1925, 1937, 1951, 1958, 1961, 1963, 1966, 1970, 1976, 1987, 1997, 2007 and 2017. All rights reserved. "The American Institute of Architects," "American Institute of Architects," "AIA," the AIA Logo, and "AIA Contract Documents" are trademarks of The American Institute of Architects. This draft was produced at 12:48:57 ET on 03/03/2025 under Order No.3104239075 which expires on 06/30/2025, is not for resale, is licensed for one-time use only, and may only be used in accordance with the AIA Contract Documents® Terms of Service. To report copyright violations, e-mail docinfo@aiacontracts.com.
User Notes: (793080888)

§ 3.14.2 The Contractor shall not damage or endanger a portion of the Work or fully or partially completed construction of the Owner or Separate Contractors by cutting, patching, or otherwise altering such construction, or by excavation. The Contractor shall not cut or otherwise alter construction by the Owner or a Separate Contractor except with written consent of the Owner and of the Separate Contractor. Consent shall not be unreasonably withheld. The Contractor shall not unreasonably withhold, from the Owner or a Separate Contractor, its consent to cutting or otherwise altering the Work.

§ 3.14.3 Only tradespersons skilled and experienced in cutting, fitting and patching shall perform such Work. An appropriate member of the Construction Team shall do all cutting, fitting or patching on the Work that may be required to make its several parts come together properly and fit the Work to receive or be received by work of other contractors shown by, or reasonably implied by, the Contract Documents for the completed Project. An appropriate member of the Construction Team shall repair or otherwise make good all such cutting, fitting, or patching after the required Work has been completed as the Architect may direct.

§ 3.14.4 The Contractor shall not cut or otherwise alter any portion of any structure of which the Work is a part of or to which the Work is attached without in each instance having first submitted a Shop Drawings accurately locating each such cut or alteration. The Architect's approval of such Shop Drawings must be obtained prior to making any such cut or alteration.

§ 3.15 Cleaning Up

§ 3.15.1 The Contractor shall keep the premises and surrounding area free from accumulation of waste materials and rubbish caused by operations under the Contract. At completion of the Work, the Contractor shall remove waste materials, rubbish, the Contractor's tools, construction equipment, machinery, and surplus materials from and about the Project.

§ 3.15.2 If the Contractor fails to clean up as provided in the Contract Documents, the Owner may do so and the Owner shall be entitled to reimbursement from the Contractor.

§ 3.16 Access to Work

The Contractor shall provide the Owner, the Owner's consultants and separate contractors, and the Architect with access to the Work in preparation and progress wherever located.

§ 3.17 Royalties, Patents and Copyrights

The Contractor shall pay all royalties and license fees. The Contractor shall defend suits or claims for infringement of copyrights and patent rights and shall hold the Owner and Architect harmless from loss on account thereof, but shall not be responsible for defense or loss when a particular design, process, or product of a particular manufacturer or manufacturers is required by the Contract Documents, or where the copyright violations are contained in Drawings, Specifications, or other documents prepared by the Owner or Architect. However, if an infringement of a copyright or patent is discovered by, or made known to, the Contractor, the Contractor shall be responsible for the loss unless the information is promptly furnished to the Architect.

§ 3.18 Indemnification

§ 3.18.1 To the fullest extent permitted by law, the Contractor shall defend, indemnify, and hold harmless the Owner, Owner's consultants, Owner's Representative Consultant, Architect, Architect's consultants, and agents and employees of any of them from and against claims, damages, losses, liabilities, and expenses, including but not limited to professional and attorneys' fees, arising out of or resulting from its and the Construction Team's activities related to the performance of the Work, but only to the extent caused by the negligent acts or omissions of the Contractor and the Construction Team, anyone directly or indirectly employed by them, or anyone for whose acts they may be liable, regardless of whether or not such claim, damage, loss, or expense is caused in part by a party indemnified hereunder. Such obligation shall not be construed to negate, abridge, or reduce other rights or obligations of indemnity that would otherwise exist as to a party or person described in this Section 3.18.

§ 3.18.2 In claims against any person or entity indemnified under this Section 3.18 by an employee of the Contractor, a Subcontractor, anyone directly or indirectly employed by them, or anyone for whose acts they may be liable, the indemnification obligation under Section 3.18.1 shall not be limited by a limitation on amount or type of damages, compensation, or benefits payable by or for the Contractor or a Subcontractor under workers' compensation acts, disability benefit acts, or other employee benefit acts.

AIA Document A201 – 2017. Copyright © 1911, 1915, 1918, 1925, 1937, 1951, 1958, 1961, 1963, 1966, 1970, 1976, 1987, 1997, 2007 and 2017. All rights reserved. "The American Institute of Architects," "American Institute of Architects," "AIA," the AIA Logo, and "AIA Contract Documents" are trademarks of The American Institute of Architects. This draft was produced at 12:48:57 ET on 03/03/2025 under Order No.3104239075 which expires on 06/30/2025, is not for resale, is licensed for one-time use only, and may only be used in accordance with the AIA Contract Documents® Terms of Service. To report copyright violations, e-mail docinfo@aiacontracts.com.
User Notes: (793080888)

§ 3.18.3 The Contractor shall pay all professional and attorney fees incurred by the indemnitees to enforce the provisions of this Section 3.18.

§ 3.19 Record Documents

§ 3.19.1 The Contractor shall maintain at the Project site keep updated the Record Documents, which include the Contract Documents, Change Orders, proposed or requested Change Orders, Construction Change Directives, the Record Drawings, construction schedules, reports, requests for information and responses to them, submittals and responses to them, logs, meeting minutes, notices, maintenance and operating manuals, and other documents generated by the Construction Team in the performance of the Work. As part of the Record Documents, the Contractor shall maintain records of principal building layout lines, elevations of the bottoms of footings, utility inverts, Project floor levels and key site elevations certified by a qualified surveyor. Internal memoranda or reports, privileged communications, documents with incidental references to the Work, and documents which discuss multiple projects are not Record Documents.

§ 3.19.2 The Contractor shall make the Record Documents available to the Owner and the Architect for inspection and copying at all times during performance of the Work.

§ 3.19.3 The Record Drawings depict the Work as it is actually built. The Contractor shall prepare and update them continuously during the prosecution of the Work. The Contractor shall maintain the Record Drawings showing: (i) deviations from the Drawings made during construction; (ii) details in the Work not previously shown; (iii) changes to existing conditions or existing conditions found to differ from those shown on any existing drawings; (iv) the actual installed position of equipment, piping, conduits, light switches, electric fixtures, circuiting, ducts, dampers, access panels, control valves, drains, openings, and stub-outs; and (v) such other information as the Owner and Architect may reasonably request. The Contractor shall also be responsible for providing record sitework drawings that are required by the authority having jurisdiction in order to closeout the project.

§ 3.19.3.1 At Substantial Completion of the Work, the Contractor shall deliver the Record Drawings, approved shop drawings and submittals, requests for information and responses, operation and maintenance manuals, and other Record Documents requested by the Owner to the Owner neatly organized and indexed in both bound hard copy and electronic format. The Contractor shall be permitted to retain a copy of the Record Documents for its own use after the Work is completed and, in any event, the Owner shall continue to provide the Contractor with access to them for to inspection and copying.

§ 3.20 Warranties and Manuals

§ 3.20 Unless the Contract Documents require otherwise, the Contractor shall bind and turn over to the Owner in electronic and hard copy form a set of manufacturers' warranties and operating and/or maintenance manuals, instructions or schedules for all equipment and special materials requiring such. Such information will clearly categorize and index each piece of equipment and material included, and shall be clearly marked noting "project specific" equipment, model numbers, and other applicable information. Such manuals will be collected and organized by the Contractor and submitted to the Owner at one time, as a condition of Substantial Completion.

§ 3.21 Project Information System

The Contractor shall establish and maintain a Project Information System for organizing, preserving, and tracking Project documents, requests, and other administrative matters including, but not limited to, submittals, requests for information, project accounting, and change order requests. The Contractor shall provide the Owner, Architect, and the Owner's Representative Consultant access to the Project Information System. Upon completion of the Project, the Contractor shall provide the Owner an archival copy of the information contained on the Project Information System. The Contractor shall maintain the information in the Project Information System for the applicable statute of limitation or statute of repose.

ARTICLE 4 ARCHITECT

§ 4.1 General

§ 4.1.1 The Architect is the person or entity retained by the Owner pursuant to Section 2.3.2 and identified as such in the Agreement.

AIA Document A201 – 2017. Copyright © 1911, 1915, 1918, 1925, 1937, 1951, 1958, 1961, 1963, 1966, 1970, 1976, 1987, 1997, 2007 and 2017. All rights reserved. "The American Institute of Architects," "American Institute of Architects," "AIA," the AIA Logo, and "AIA Contract Documents" are trademarks of The American Institute of Architects. This draft was produced at 12:48:57 ET on 03/03/2025 under Order No.3104239075 which expires on 06/30/2025, is not for resale, is licensed for one-time use only, and may only be used in accordance with the AIA Contract Documents® Terms of Service. To report copyright violations, e-mail docinfo@aiacontracts.com.
User Notes: (793080888)

§ 4.1.2 Duties, responsibilities, and limitations of authority of the Architect to administer the Contract as set forth in the Contract Documents shall not be restricted, modified, or extended without written notice to the Contractor.

§ 4.2 Administration of the Contract

§ 4.2.1 The Architect will provide administration of the Contract as described in the Contract Documents and will be an Owner's representative during construction until the date the Owner makes final payment, and, with the Owner's concurrence, during the period for correction of the Work under Section 12.2. The Architect will have authority to act on behalf of the Owner only to the extent provided in the Contract Documents. The Architect does not have authority to modify the Contract Sum or Contract Time or to direct changes in the Work that may prompt the Contractor to seek a change in Contract Sum or Contract Time.

§ 4.2.2 The Architect will visit the site at intervals appropriate to the stage of construction, or as otherwise agreed with the Owner, to become generally familiar with the progress and quality of the portion of the Work completed, and to determine in general if the Work observed is being performed in a manner indicating that the Work, when fully completed, will be in accordance with the Contract Documents. However, the Architect will not be required to make exhaustive or continuous on-site inspections to check the quality or quantity of the Work. The Architect will not have control over, charge of, or responsibility for the construction means, methods, techniques, sequences or procedures, or for the safety precautions and programs in connection with the Work, since these are solely the Contractor's rights and responsibilities under the Contract Documents.

§ 4.2.3 On the basis of the site visits, the Architect will keep the Owner reasonably informed about the progress and quality of the portion of the Work completed, and promptly report to the Owner (1) known deviations from the Contract Documents, (2) known deviations from the most recent construction schedule submitted by the Contractor, and (3) defects and deficiencies observed in the Work. The Architect will not be responsible for the Contractor's failure to perform the Work in accordance with the requirements of the Contract Documents. The Architect will not have control over or charge of, and will not be responsible for acts or omissions of, the Contractor, Subcontractors, or their agents or employees, or any other persons or entities performing portions of the Work.

§ 4.2.4 Communications

The Owner and Contractor shall include the Architect in all communications that relate to or affect the Architect's services or professional responsibilities. The Owner shall promptly notify the Architect of the substance of any direct communications between the Owner and the Contractor otherwise relating to the Project. Communications by and with the Architect's consultants shall be through the Architect. Communications by and with Subcontractors and suppliers shall be through the Contractor. Communications by and with Separate Contractors shall be through the Owner. The Contract Documents may specify other communication protocols.

§ 4.2.5 Based on the Architect's evaluations of the Contractor's Applications for Payment, the Architect will review and certify the amounts due the Contractor and will issue Certificates for Payment in such amounts.

§ 4.2.6 The Architect has authority to reject Work that does not conform to the Contract Documents or that the Architect believes will not conform when completed. Whenever the Architect considers it necessary or advisable, the Architect will have authority to require inspection or testing of the Work in accordance with Sections 13.4.2 and 13.4.3, whether or not the Work is fabricated, installed or completed. However, neither this authority of the Architect nor a decision made in good faith either to exercise or not to exercise such authority shall give rise to a duty or responsibility of the Architect to the Contractor, Subcontractors, suppliers, their agents or employees, or other persons or entities performing portions of the Work. The Architect's failure to reject non-conforming Work does not constitute acceptance of it.

§ 4.2.7 The Architect will review and approve, or take other appropriate action upon, the Contractor's submittals such as Shop Drawings, Product Data, and Samples, but only for the limited purpose of checking for conformance with information given and the design concept expressed in the Contract Documents. The Architect's action will be taken in accordance with the submittal schedule approved by the Architect or, in the absence of an approved submittal schedule, with reasonable promptness while allowing sufficient time in the Architect's professional judgment to permit adequate review. Review of such submittals is not conducted for the purpose of determining the accuracy and completeness of other details such as dimensions and quantities, or for substantiating instructions for installation or performance of equipment or systems, all of which remain the responsibility of the Contractor as required by the Contract Documents. The Architect's review or approval of the Contractor's submittals shall not

AIA Document A201 – 2017. Copyright © 1911, 1915, 1918, 1925, 1937, 1951, 1958, 1961, 1963, 1966, 1970, 1976, 1987, 1997, 2007 and 2017. All rights reserved. "The American Institute of Architects," "American Institute of Architects," "AIA," the AIA Logo, and "AIA Contract Documents" are trademarks of The American Institute of Architects. This draft was produced at 12:48:57 ET on 03/03/2025 under Order No.3104239075 which expires on 06/30/2025, is not for resale, is licensed for one-time use only, and may only be used in accordance with the AIA Contract Documents® Terms of Service. To report copyright violations, e-mail docinfo@aiacontracts.com.
User Notes: (793080888)

relieve the Contractor of the obligations under Sections 3.3, 3.5, and 3.12. The Architect's review or approval of a submittal shall not constitute approval of safety precautions or of any construction means, methods, techniques, sequences, or procedures. The Architect's approval of a specific item shall not indicate approval of an assembly of which the item is a component. Except for minor changes to the Work expressly authorized by the Architect in writing, the Architect's approval does not constitute a Modification.

§ 4.2.8 The Architect will prepare, or if prepared by the Contractor or Owner the Architect will review, Change Orders and Construction Change Directives, and may order minor changes in the Work as provided in Section 7.4. The Architect will investigate and make determinations and recommendations regarding concealed and unknown conditions as provided in Section 3.7.4. The Architect's signature on any Change Order certifies that the Architect has reviewed all changes to the Work set forth therein and that Contract Documents, as modified by the Change Order, are consistent with the Architect's obligations under the agreement between the Owner and Architect.

§ 4.2.9 The Architect will conduct inspections to determine the date or dates of Substantial Completion and the date of final completion; issue Certificates of Substantial Completion pursuant to Section 9.8; receive, compile, review, confirm the completeness of, and forward to the Owner, for the Owner's review and records, written warranties and related documents required by the Contract and assembled by the Contractor pursuant to Section 9.10; and issue a final Certificate for Payment pursuant to Section 9.10.

§ 4.2.10 If the Owner and Architect agree, the Architect will provide one or more Project representatives to assist in carrying out the Architect's responsibilities at the site. The Owner shall notify the Contractor of any change in the duties, responsibilities and limitations of authority of the Project representatives.

§ 4.2.11 The Architect will interpret and decide matters concerning performance under, and requirements of, the Contract Documents on written request of either the Owner or Contractor. The Architect's response to such requests will be made in writing within any time limits agreed upon or otherwise with reasonable promptness. Subject to Section 7.5, the Contractor shall implement directions given with the Architect's response.

§ 4.2.12 Interpretations and decisions of the Architect will be consistent with the intent of, and reasonably inferable from, the Contract Documents and will be in writing or in the form of drawings. When making such interpretations and decisions, the Architect will endeavor to secure faithful performance by both Owner and Contractor, will not show partiality to either, and will not be liable for results of interpretations or decisions rendered in good faith.

§ 4.2.13 Subject to the Owner's written approval, the Architect's decisions on matters relating to aesthetic effect will be final if consistent with the intent expressed in the Contract Documents.

§ 4.2.14 The Architect will review and respond to requests for information about the Contract Documents. The Architect's response to such requests will be made in writing within any time limits agreed upon or otherwise with reasonable promptness. If appropriate and subject to Article 7, the Architect will prepare and issue supplemental Drawings and Specifications in response to the requests for information.

§ 4.2.15 The Architect and Contractor recognize that the timely responses to requests for information from Architect is important to the success of the Work. Accordingly, Contractor shall promptly meet after the execution of the Contract to establish with the Architect in writing protocols and mutually acceptable time limits for the Architect's responses regarding requests for information from the Architect. Such agreed upon time limits shall not give rise to a change in the Contract Time. The Architect shall be responsible for the cost of delays, if any, attributable to its failure to provide responses in the time established by the Architect and Contractor. Failure by the Contractor to document the agreed up on timeframe for response, or the timing of the request and response, shall constitute a waiver of any claim for change in the Contract Time or Contract Sum resulting from the Architect's delayed response to the request for information.

§ 4.2.16 The Contractor will compensate the Owner for fees demanded by the Architect for excessive review of submittals and for reviewing requests for information by the Contractor that the Architect legitimately believes to lack merit.

AIA Document A201 – 2017. Copyright © 1911, 1915, 1918, 1925, 1937, 1951, 1958, 1961, 1963, 1966, 1970, 1976, 1987, 1997, 2007 and 2017. All rights reserved. "The American Institute of Architects," "American Institute of Architects," "AIA," the AIA Logo, and "AIA Contract Documents" are trademarks of The American Institute of Architects. This draft was produced at 12:48:57 ET on 03/03/2025 under Order No.3104239075 which expires on 06/30/2025, is not for resale, is licensed for one-time use only, and may only be used in accordance with the AIA Contract Documents® Terms of Service. To report copyright violations, e-mail docinfo@aiacontracts.com.
User Notes: (793080888)

ARTICLE 5 SUBCONTRACTORS

§ 5.1 Definitions

§ 5.1.1 A Subcontractor is a person or entity who has a direct contract with the Contractor to perform a portion of the Work at the site. The term "Subcontractor" is referred to throughout the Contract Documents as if singular in number and means a Subcontractor or an authorized representative of the Subcontractor. The term "Subcontractor" does not include a Separate Contractor or the subcontractors of a Separate Contractor.

§ 5.1.2 A Sub-subcontractor is a person or entity who has a direct or indirect contract with a Subcontractor to perform a portion of the Work at the site. The term "Sub-subcontractor" is referred to throughout the Contract Documents as if singular in number and means a Sub-subcontractor or an authorized representative of the Sub-subcontractor.

§ 5.2 Award of Subcontracts and Other Contracts for Portions of the Work

§ 5.2.1 Unless otherwise stated in the Contract Documents, the Contractor, as soon as practicable after award of the Contract, shall notify the Owner and Architect of the persons or entities proposed for each principal portion of the Work, including those who are to furnish materials or equipment fabricated to a special design. The Contractor shall provide the Owner or Architect information regarding such entities as reasonably requested. Within 14 days of receipt of the information, the Architect may notify the Contractor whether the Owner or the Architect (1) has reasonable objection to any such proposed person or entity or (2) requires additional time for review. Failure of the Architect to provide notice within the 14-day period shall constitute notice of no reasonable objection.

§ 5.2.2 The Contractor shall not contract with a proposed person or entity to whom the Owner or Architect has made reasonable and timely objection. The Contractor shall not be required to contract with anyone to whom the Contractor has made reasonable objection.

§ 5.2.3 If the Owner or Architect has reasonable objection to a person or entity proposed by the Contractor, the Contractor shall propose another to whom the Owner or Architect has no reasonable objection. If the proposed but rejected Subcontractor was reasonably capable of performing the Work and either provided a price within the Owner's budget or Stated Limitation on the Cost of the Work, as applicable, the Contract Sum and Contract Time shall be increased or decreased by the difference, if any, occasioned by such change, and an appropriate Change Order shall be issued before commencement of the substitute Subcontractor's Work. However, no increase in the Contract Sum or Contract Time shall be allowed for such change unless the Contractor has acted promptly and responsively in submitting names as required.

§ 5.2.4 The Contractor shall not substitute a Subcontractor, person, or entity for one previously selected if the Owner or Architect makes reasonable objection to such substitution.

§ 5.2.5 The Owner may enter into agreements with trade contractors for portions of the Project and assign one or more of the agreements to the Contractor, which the Contractor shall accept unless reasonable and particularized objection is promptly made in writing. With any such assignment, the agreement shall become a Subcontract, the trade contractor shall become a Subcontractor, and the work being performed shall become Work for which the Contractor is responsible.

§ 5.3 Subcontractual Relations

By appropriate written agreement, the Contractor shall require each Subcontractor, to the extent of the Work to be performed by the Subcontractor, to be bound to the Contractor by terms of the Contract Documents, and to assume toward the Contractor all the obligations and responsibilities, including the responsibility for safety of the Subcontractor's Work that the Contractor, by these Contract Documents, assumes toward the Owner and Architect. Each subcontract agreement shall preserve and protect the rights of the Owner and Architect under the Contract Documents with respect to all activities related to the Work to be performed by the Subcontractor so that subcontracting thereof will not prejudice any such rights, and shall allow to the Subcontractor, unless specifically provided otherwise in the subcontract agreement, the benefit of all rights, remedies, and redress against the Contractor that the Contractor, by the Contract Documents, has against the Owner. Where appropriate, the Contractor shall require each Subcontractor to enter into similar agreements with Sub-subcontractors. The Contractor shall make available to each proposed Subcontractor, prior to the execution of the subcontract agreement, copies of the Contract Documents to which the Subcontractor will be bound, and, upon written request of the Subcontractor, identify to the Subcontractor terms and conditions of the proposed subcontract agreement that may

AIA Document A201 – 2017. Copyright © 1911, 1915, 1918, 1925, 1937, 1951, 1958, 1961, 1963, 1966, 1970, 1976, 1987, 1997, 2007 and 2017. All rights reserved. "The American Institute of Architects," "American Institute of Architects," "AIA," the AIA Logo, and "AIA Contract Documents" are trademarks of The American Institute of Architects. This draft was produced at 12:48:57 ET on 03/03/2025 under Order No.3104239075 which expires on 06/30/2025, is not for resale, is licensed for one-time use only, and may only be used in accordance with the AIA Contract Documents® Terms of Service. To report copyright violations, e-mail docinfo@aiacontracts.com.
User Notes: (793080888)

be at variance with the Contract Documents. Subcontractors will similarly make copies of applicable portions of such documents available to their respective proposed Sub-subcontractors.

§ 5.3.1 In addition to the requirements of Section 5.3, each form of subcontract agreement shall:

- **.1** require timely submittal of invoices and applications for payment and supporting documentation;
- **.2** unless precluded by the Owner's property insurance, waive of rights of subrogation for damages caused by fire or other perils covered by the property insurance;
- **.3** name the Owner as an intended third-party beneficiary; and,
- **.4** recognize the contingent assignment of the subcontract under Section 5.4

§ 5.4 Contingent Assignment of Subcontracts

§ 5.4.1 Each subcontract agreement for a portion of the Work is assigned by the Contractor to the Owner, provided that

- **.1** assignment is effective only after termination of the Contract by the Owner for cause pursuant to Section 14.2 and only for those subcontract agreements that the Owner accepts by notifying the Subcontractor and Contractor; and
- **.2** assignment is subject to the prior rights of the surety, if any, obligated under bond relating to the Contract.

When the Owner accepts the assignment of a subcontract agreement, the Owner assumes the Contractor's rights under the subcontract.

§ 5.4.2 Upon assignment to the Owner under this Section 5.4, the Owner may further assign the subcontract to a successor contractor or other entity.

§ 5.5 Subcontractor Insurance. Unless excused on a case by case basis, all Subcontractors and Sub-subcontractors shall procure the insurance coverage required of the Contractor by the Contract Documents. The Contractor shall obtain required documentation, shall review it for compliance with the requirements of the Contract Documents, and shall report it to the Owner. No Subcontractor or Sub-subcontractor shall perform any portion of the Work or have a presence at the Project site without providing satisfactory proof of insurance coverage to the Owner. The Contractor shall monitor the Subcontractors' and Sub-subcontractors' insurance certificates to ensure coverage remains current.

ARTICLE 6 CONSTRUCTION BY OWNER OR BY SEPARATE CONTRACTORS

§ 6.1 Owner's Right to Perform Construction and to Award Separate Contracts

§ 6.1.1 The term "Separate Contractor(s)" shall mean other contractors retained by the Owner under separate agreements. The Owner reserves the right, but shall have no obligation, to perform construction or operations related to the Project with the Owner's own forces, and with Separate Contractors .

§ 6.1.2 When separate contracts are awarded for different portions of the Project or other construction or operations on the site, the term "Contractor" in the Contract Documents in each case shall mean the Contractor who executes each separate Owner-Contractor Agreement.

§ 6.1.3 The Contractor shall coordinate the Work being performed by the Construction Team with the Owner's forces and each Separate Contractor, who shall cooperate with them. The Contractor shall participate with any Separate Contractors and the Owner in reviewing their construction schedules. The Contractor shall account for the work of the Owner's forces and Separate Contractors on its construction schedule and shall make any revisions deemed necessary after a joint review. The construction schedules shall then constitute the schedules to be used by the Contractor, Separate Contractors, and the Owner until subsequently revised. Whenever the Contractor's Work is dependent upon the work of the Owner or the Owner's Separate Contractors, the Contractor shall notify the Owner of such condition with sufficient time to prevent any delays to the progress of the Work. The Contractor shall promptly notify the Owner in writing, and in accordance with the Contract's requirements, upon becoming of aware that Separate Contractor actions will in any way compromise the Contractor's ability to meet its responsibility under the Contract Documents.

§ 6.1.4 Unless otherwise provided in the Contract Documents, when the Owner performs construction or operations related to the Project with the Owner's own forces or with Separate Contractors, the Owner or its Separate

AIA Document A201 – 2017. Copyright © 1911, 1915, 1918, 1925, 1937, 1951, 1958, 1961, 1963, 1966, 1970, 1976, 1987, 1997, 2007 and 2017. All rights reserved. "The American Institute of Architects," "American Institute of Architects," "AIA," the AIA Logo, and "AIA Contract Documents" are trademarks of The American Institute of Architects. This draft was produced at 12:48:57 ET on 03/03/2025 under Order No.3104239075 which expires on 06/30/2025, is not for resale, is licensed for one-time use only, and may only be used in accordance with the AIA Contract Documents® Terms of Service. To report copyright violations, e-mail docinfo@aiacontracts.com.
User Notes: (793080888)

Contractors shall have the same obligations and rights that the Contractor has under the Conditions of the Contract, including, without excluding others, those stated in Article 3, this Article 6, and Articles 10, 11, and 12.

§ 6.2 Mutual Responsibility

§ 6.2.1 The Contractor shall afford the Owner and Separate Contractors reasonable opportunity for introduction and storage of their materials and equipment and performance of their activities, and shall connect and coordinate the Contractor's construction and operations with theirs as required by the Contract Documents.

§ 6.2.2 If part of the Contractor's Work depends for proper execution or results upon construction or operations by the Owner or a Separate Contractor, the Contractor shall, prior to proceeding with that portion of the Work, promptly notify the Architect of apparent discrepancies or defects in the construction or operations by the Owner or Separate Contractor that would render it unsuitable for proper execution and results of the Contractor's Work. Failure of the Contractor to notify the Architect of apparent discrepancies or defects prior to proceeding with the Work shall constitute an acknowledgment that the Owner's or Separate Contractor's completed or partially completed construction is fit and proper to receive the Contractor's Work. The Contractor shall not be responsible for discrepancies or defects in the construction or operations by the Owner or Separate Contractor that are not apparent provided it has thoroughly examined the visible portions of any work that the Contractor's Work may be dependent on or interconnected with.

§ 6.2.3 The Contractor shall reimburse the Owner for costs the Owner incurs for its own forces or that are payable to a Separate Contractor because of the Contractor's delays, improperly timed activities, or defective construction. The Owner shall be responsible to the Contractor for costs the Contractor incurs because of a Separate Contractor's delays, improperly timed activities, damage to the Work or defective construction provided the Contractor has taken every reasonable step to mitigate any Contractor costs and delays and gives the Owner notice in accordance with the applicable provision of the Contract Documents.

§ 6.2.4 The Contractor shall promptly remedy damage that the Contractor causes to completed or partially completed construction or to property of the Owner or Separate Contractor as provided in Section 10.2.5.

§ 6.2.5 The Owner and each Separate Contractor shall have the same responsibilities for cutting and patching as are described for the Contractor in Section 3.14.

§ 6.3 Owner's Right to Clean Up

If a dispute arises among the Contractor, Separate Contractors, and the Owner as to the responsibility under their respective contracts for maintaining the premises and surrounding area free from waste materials and rubbish, the Owner may clean up and the Architect will allocate the cost among those the Owner and Architect deem responsible in their reasonable discretion.

ARTICLE 7 CHANGES IN THE WORK

§ 7.1 General

§ 7.1.1 Changes in the Work may be accomplished after execution of the Contract, and without invalidating the Contract, by Change Order, Construction Change Directive or order for a minor change in the Work, subject to the limitations stated in this Article 7 and elsewhere in the Contract Documents.

§ 7.1.2 A Change Order shall be based upon agreement among the Owner, Contractor, and Architect. A Construction Change Directive may be issued by the Owner or Architect and may or may not be agreed to by the Contractor. An order for a minor change in the Work may be issued by the Owner or Architect. The Contractor may request a Change Order in accordance with Section 7.5.

§ 7.1.3 Changes in the Work shall be performed under applicable provisions of the Contract Documents. The Contractor shall proceed promptly with authorized Modifications in the Work, unless otherwise provided in the Change Order, Construction Change Directive, or order for a minor change in the Work.

§ 7.1.4 The Contractor shall maintain a log of all changes in the Work, Contract Sum, or Contract Time that have been proposed or requested by the parties, all Change Orders, and all other Modifications. The log shall include the date the change was first proposed, a brief description of the change, an estimate of the cost or savings realized by the contemplated change, an estimate of the change's impact on the critical path, and any adjustment in the Contract

AIA Document A201 – 2017. Copyright © 1911, 1915, 1918, 1925, 1937, 1951, 1958, 1961, 1963, 1966, 1970, 1976, 1987, 1997, 2007 and 2017. All rights reserved. "The American Institute of Architects," "American Institute of Architects," "AIA," the AIA Logo, and "AIA Contract Documents" are trademarks of The American Institute of Architects. This draft was produced at 12:48:57 ET on 03/03/2025 under Order No.3104239075 which expires on 06/30/2025, is not for resale, is licensed for one-time use only, and may only be used in accordance with the AIA Contract Documents® Terms of Service. To report copyright violations, e-mail docinfo@aiacontracts.com.
User Notes: (793080888)

Sum and Contract Time resulting from a Change Order or Modification that implements the change. A Construction Change Directive shall be recorded as such on the log. This log must be updated and presented to the Owner least bi-weekly and/or via a collaborative Project Information System. This log must also include projected changes in the Work through Final Completion of the Project, enabling the Contractor and Owner to manage the contingency funds for the Project.

§ 7.1.4.1 In order to facilitate the timely submission and processing of proposed changes described in Article 7.1.4, the Contractor and Architect shall establish an efficient process for their review and shall reserve for the Owner an appropriate amount of time for the review and approval of proposed Modifications. The Contractor shall utilize a collaborative Project Information System to manage the Modification process.

§ 7.1.5 The Contractor shall maintain accounting records detailing the cost of all changes in the Work and will permit the Owner to inspect and copy them upon request.

§ 7.1.6 In no event shall the Contractor be entitled to receive, and the Contractor hereby waives the right to receive any payment or any extension of time for additional or changed Work, whether partially or fully completed or simply proposed, unless such additional work is authorized by a written Change Order or Construction Change Directive signed by the Owner, nor shall the Contractor be obligated to proceed with any such work. Change Orders and Construction Change Directives may only be accomplished using a form substantially similar to an AIA G701 or G714 respectively or, if applicable, a form attached to the Contract. No course of conduct or dealing between the parties, nor express or implied acceptance of alterations or additions to the Work, and no claim that the Owner has been enriched by any alteration of or addition to the Work, whether or not there is, in fact, any unjust enrichment to the Work, shall be the basis of any claim for an adjustment to the Contract Sum or Contract time. For an abundance of clarity, no Architect's bulletin nor Contractor Change Order Request or Change Log, even if signed or otherwise agreed to by the Owner, shall be binding or be given effect unless incorporated into a signed Change Order or Construction Change Directive in accordance with this Section.

§ 7.2 Change Orders

§ 7.2.1 A Change Order is a written instrument signed by the Owner, Contractor, and Architect stating their agreement upon all of the following:

- **.1** The change in the Work;
- **.2** The amount of the adjustment, if any, in the Contract Sum; and
- **.3** The extent of the adjustment, if any, in the Contract Time.

§ 7.2.2 Written agreement by the Owner, Architect, and Contractor on any Change Order shall constitute a final settlement of and a waiver of and permanent bar to all claims by Architect or Contractor relating to the change in the Work which is the subject to the Change Order, including all direct and indirect costs and consequential damages associated with such change and any and all adjustments to the Contract Sum and the Contract Time. No blanket reservation for the Contractor of any right to bring further claims for the subject of the Change Order, whether or not included in the Change order, shall be given effect. A signed Change Order constitutes the whole fully integrated agreement between the parties with respect to the subject matter contained therein.

§ 7.3 Construction Change Directives

§ 7.3.1 A Construction Change Directive is a written order signed by the Owner and Architect, directing a change in the Work or the Contractor's pace of performing the Work prior to agreement on adjustment, if any, in the Contract Sum or Contract Time, or both. The Owner may by Construction Change Directive, without invalidating the Contract, order changes in the Work within the general scope of the Contract consisting of additions, deletions, or other revisions, or order changes in the Contractor's pace of performing the Work, the Contract Sum being adjusted in accordance with the actual cost of implementing the direction and the Contract Time being adjusted in accordance with the actual extension or reduction in the construction schedule's critical path.

§ 7.3.2 A Construction Change Directive shall be used in the absence of total agreement on the terms of a Change Order.

§ 7.3.3 If the Construction Change Directive provides for an adjustment to the Contract Sum, the adjustment shall be based on one of the following methods:

AIA Document A201 – 2017. Copyright © 1911, 1915, 1918, 1925, 1937, 1951, 1958, 1961, 1963, 1966, 1970, 1976, 1987, 1997, 2007 and 2017. All rights reserved. "The American Institute of Architects," "American Institute of Architects," "AIA," the AIA Logo, and "AIA Contract Documents" are trademarks of The American Institute of Architects. This draft was produced at 12:48:57 ET on 03/03/2025 under Order No.3104239075 which expires on 06/30/2025, is not for resale, is licensed for one-time use only, and may only be used in accordance with the AIA Contract Documents® Terms of Service. To report copyright violations, e-mail docinfo@aiacontracts.com.
User Notes: (793080888)

.1 Mutual acceptance of a lump sum properly itemized and supported by sufficient substantiating data to permit evaluation;
.2 Unit prices stated in the Contract Documents or subsequently agreed upon;
.3 Cost to be determined in a manner agreed upon by the parties and a mutually acceptable fixed or percentage fee; or
.4 As provided in Section 7.3.4.

§ 7.3.4 If the Contractor does not respond promptly or disagrees with the method for adjustment in the Contract Sum, the Architect, in consultation with the Owner and Contractor, shall determine the adjustment on the basis of reasonable expenditures and savings of those performing the Work attributable to the Construction Change Directive, including, in case of a change in the Contract Sum, an amount for overhead and profit as set forth in the Agreement, or if no such amount is set forth in the Agreement, a reasonable amount for overhead and profit not to exceed ten percent on Work self-performed by the Contractor and five percent for Work performed by Subcontractors. In such case, and also under Section 7.3.3.3, the Contractor shall keep and present, in such form as the Architect may prescribe, an itemized accounting together with appropriate supporting data. Unless otherwise provided in the Contract Documents, costs for the purposes of this Section 7.3.4 shall be limited to the following which shall not exceed the then current market rate for the Project location:

.1 Costs of labor, including applicable payroll taxes, fringe benefits required by agreement or custom, workers' compensation insurance, and other employee costs approved by the Architect;
.2 Costs of materials, supplies, and equipment, including cost of transportation, whether incorporated or consumed;
.3 Rental costs of machinery and equipment, exclusive of hand tools, whether rented from the Contractor or others;
.4 Costs of premiums for all bonds and insurance, permit fees, and sales, use, or similar taxes, directly related to the change; and
.5 Costs of supervision and field office personnel directly attributable to the change.

§ 7.3.5 If the Contractor disagrees with the adjustment in the Contract Time, the Contractor may make a Claim in accordance with applicable provisions of Article 15.

§ 7.3.6 Upon receipt of a Construction Change Directive, the Contractor shall promptly proceed with the change in the Work involved and advise the Architect and Owner of the Contractor's agreement or disagreement with the method, if any, provided in the Construction Change Directive for determining the proposed adjustment in the Contract Sum or Contract Time.

§ 7.3.7 A Construction Change Directive signed by the Contractor indicates the Contractor's agreement therewith, including adjustment in Contract Sum and Contract Time or the method for determining them. Such agreement shall be effective immediately and shall be recorded as a Change Order.

§ 7.3.8 The amount of credit to be allowed by the Contractor to the Owner for a deletion or change that results in a net decrease in the Contract Sum shall be actual net cost as confirmed by the Architect and Owner. When both additions and credits covering related Work or substitutions are involved in a change, the allowance for overhead and profit shall be figured on the basis of net increase or reduction, if any, with respect to that change. The reduction in the Contract Time for a deletion of Work shall be proportionate to the reduction in parts of the Work that are critical path activities on the current construction schedule.

§ 7.3.9 Pending final determination of the total cost of a Construction Change Directive to the Owner, the Contractor may request payment for Work completed under the Construction Change Directive in Applications for Payment. The Architect, in consultation with the Owner and Contractor, will make an interim determination for purposes of monthly certification for payment for those costs and certify for payment the amount that the Architect determines, in the Architect's professional judgment, to be reasonably justified. The Architect's interim determination of cost shall adjust the Contract Sum on the same basis as a Change Order, subject to the right of either party to disagree and assert a Claim in accordance with Article 15. The Owner may audit the Contractor's books and records to verify the cost of Work performed under a Construction Change Directive.

§ 7.3.10 When the Owner and Contractor agree with a determination made by the Architect concerning the adjustments in the Contract Sum and Contract Time, or otherwise reach agreement upon the adjustments, such

AIA Document A201 – 2017. Copyright © 1911, 1915, 1918, 1925, 1937, 1951, 1958, 1961, 1963, 1966, 1970, 1976, 1987, 1997, 2007 and 2017. All rights reserved. "The American Institute of Architects," "American Institute of Architects," "AIA," the AIA Logo, and "AIA Contract Documents" are trademarks of The American Institute of Architects. This draft was produced at 12:48:57 ET on 03/03/2025 under Order No.3104239075 which expires on 06/30/2025, is not for resale, is licensed for one-time use only, and may only be used in accordance with the AIA Contract Documents® Terms of Service. To report copyright violations, e-mail docinfo@aiacontracts.com.
User Notes: (793080888)

agreement shall be effective immediately and the Architect will prepare a Change Order. Change Orders may be issued for all or any part of a Construction Change Directive.

§ 7.4 Minor Changes in the Work

The Architect, in consultation with the Owner, may order minor changes in the Work that are consistent with the intent of the Contract Documents and do not involve an adjustment in the Contract Sum or an extension of the Contract Time. The Architect's order for minor changes shall be in writing. If the Contractor believes that the proposed minor change in the Work will affect the Contract Sum or Contract Time, the Contractor shall notify the Owner and Architect in accordance with Sections 7.5, 15.1.5, and 15.1.6 and shall not proceed to implement the change in the Work. If the Contractor performs the Work set forth in the Owner's or Architect's order for a minor change without prior notice to the Architect that such change will affect the Contract Sum or Contract Time, the Contractor waives any adjustment to the Contract Sum or extension of the Contract Time.

§ 7.5 Contractor Change Order Requests

If the Contractor believes a change in the Contract Sum or Contract Time is warranted and not otherwise covered in a prior Change Order, the Contractor shall issue a written request for a Change Order to the Owner and Architect. The request shall include all reasonably ascertainable information needed to evaluate the request, including the estimated cost and the effect on the construction schedule, as well as the contractual basis for the Change in Contract Sum or Contract Time. Unless involving an emergency requiring immediate action to protect life or property and where the Contractor has provided written notice to the Owner and Architect within 12 hours, the Contractor shall issue the request and wait for the Owner's response before starting the affected Work. In no case shall the Contractor issue a request or be entitled to Modification later than twenty-one (21) days after the date the Contractor discovers, or should have discovered with the exercise of appropriate diligence, the pertinent act, error, omission, or circumstances giving rise to the requested change. In the event the Contractor disagrees with the Owner's response, the Contractor may pursue a Claim under Article 15 and subject to the requirements of Section 15.1.3. The Contractor's failure to strictly follow the procedure regarding the timing of requests for Change Orders shall operate as a waiver and release of any right to an increase in the Contract Sum and Contract Time.

ARTICLE 8 TIME

§ 8.1 Definitions

§ 8.1.1 Unless otherwise provided, Contract Time is the period of time, including authorized adjustments, allotted in the Contract Documents for Substantial Completion of the Work.

§ 8.1.2 The date of commencement of the Work is the date established in the Agreement.

§ 8.1.3 The date of Substantial Completion is the date certified by the Architect in accordance with Section 9.8.

§ 8.1.4 The term "day" as used in the Contract Documents shall mean calendar day unless otherwise specifically defined.

§ 8.2 Progress and Completion

§ 8.2.1 Time limits stated in the Contract Documents are of the essence of the Contract. By executing the Agreement, the Contractor confirms that the Contract Time is a reasonable period for performing the Work.

§ 8.2.2 The Contractor shall not knowingly, except by agreement or instruction of the Owner in writing, commence the Work prior to the effective date of insurance required to be furnished by the Contractor and Owner.

§ 8.2.3 The Contractor shall proceed expeditiously with adequate forces and shall achieve all milestone dates and Substantial Completion within the Contract Time. The Contractor shall not, without the Owner's prior approval, reschedule or re-sequence the Work so that an action, approval, or activity of the Owner moves onto the critical path or otherwise becomes critical to the Contract Time so long as such action, approval, or activity would not in fact have been critical but for the rescheduling or re-sequencing.

§ 8.2.4 Should the Contractor fail, refuse or neglect to supply sufficient workers or to cause the delivery of equipment and materials promptly to prevent delay, or fail in any material respect to commence and execute the Work diligently in accordance with the Contract Documents, or if the Work falls behind schedule, the Owner may require the Contractor to take additional measures and to have the members of the Construction Team do likewise,

AIA Document A201 – 2017. Copyright © 1911, 1915, 1918, 1925, 1937, 1951, 1958, 1961, 1963, 1966, 1970, 1976, 1987, 1997, 2007 and 2017. All rights reserved. "The American Institute of Architects," "American Institute of Architects," "AIA," the AIA Logo, and "AIA Contract Documents" are trademarks of The American Institute of Architects. This draft was produced at 12:48:57 ET on 03/03/2025 under Order No.3104239075 which expires on 06/30/2025, is not for resale, is licensed for one-time use only, and may only be used in accordance with the AIA Contract Documents® Terms of Service. To report copyright violations, e-mail docinfo@aiacontracts.com.
User Notes: (793080888)

all at no additional cost to the Owner. Such Additional Measures shall continue until the progress of the Work complies with the stage of completion required by the Contract Documents. The Owner's right to require additional measures is solely for the purpose of ensuring the Contractor's compliance with the construction schedule and subject to the following:

.1 The Contractor shall not be entitled to an adjustment in its compensation in connection with Additional Measures required by the Owner under or pursuant to this Article 8 except as specifically provided in Section 8.3.2 or in a Change Order or Construction Change Directive.

.2 The Owner may exercise the rights furnished it under or pursuant to this Article 8 as frequently as necessary to ensure that the Contractor's performance of the Work will comply with any Milestone Date or completion date set forth in the Contract Documents.

.3 Subject to reasonable prior notice and opportunity to cure, and except to the extent caused by Owner Delay, the Owner shall also have the right to offset against any amounts then or thereafter due to the Contractor, or to be reimbursed by the Contractor for, any costs incurred as a result of an increase in the Owner's own labor force or for overtime, Saturday, Sunday, and/or holiday work as a result of implementing Additional Measures for which the Contractor is responsible to pay.

§ 8.3 Delays and Extensions of Time

§ 8.3.1 If the Contractor is delayed at any time in the commencement or progress of the Work by (1) a wrongful act or neglect of the Owner or Architect, of an employee of either, or of a Separate Contractor; (2) by changes ordered in the Work; (3) by labor disputes, fire, unusual delay in deliveries, unavoidable casualties, adverse weather conditions documented in accordance with Section 15.1.6.2, or other causes that are both beyond the Contractor's control and are reasonably unforeseeable; (4) by delay authorized by the Owner pending mediation and binding dispute resolution; or (5) by other causes that the Contractor asserts, and the Architect and Owner determines in their discretion, justify delay, then the Contract Time shall be extended for such time as the Contractor demonstrates to the Owner's reasonable satisfaction an unavoidable impact to the construction schedule's critical path.

§ 8.3.2 Except as provided by Article 7, the Contract Sum shall only be increased on account of delay when the Contractor demonstrates to the Owner's reasonable satisfaction an unavoidable impact of more than five (5) consecutive days to the construction schedule's critical path and that the delay is caused by a wrongful act or negligence of the Owner or Architect, of an employee of either, or of a Separate Contractor. The increase in the Contract Sum shall not exceed the Contractor's direct, actual cost of delay calculated in accordance with the Contract Documents but without overhead, or mark-up. In no event shall the Contractor, or any member of the Construction Team, be entitled to compensation or recovery for any damages in connection with delay, including, without limitation, consequential damages, lost opportunity costs, impact damages or other similar remuneration. The Contractor hereby expressly waives and covenants and agrees not to assert any claims against the Owner for any damages, costs, losses or expenses of any nature whatsoever which any member of the Construction Team may incur as a result of any delays, interferences, suspensions, rescheduling, changes in sequences, congestion, disruptions, or the like arising from, out of or in connection with any act or omission of the Owner, its representatives or agents, it being understood and agreed that their sole and exclusive remedy in such event shall be an extension of the Contract Time and/or an adjustment to the Contract Sum to the extent provided in this Section 8.3.2.

§ 8.3.3 Neither the Contract Sum nor the Contract Time shall be increased:

.1 to the extent float in the schedule may accommodate the delay, regardless of the party responsible for the delay;

.2 when the delaying event affects the schedule's critical path concurrently with an event the Contractor is responsible for;

.3 when the Owner or Architect exercise a right granted them by the Contract Documents to manage deficiencies in the Contractor's performance;

.4 when the Contractor has failed to identify and avoid a reasonably foreseeable delay;

.5 to the extent the Contractor has failed to mitigate the effect of the delay; or

.6 when the Contractor has failed to give the Owner and Architect written notice of a critical path delay within twenty four (24) hours of its occurrence and failed to give the Owner and Architect an opportunity to resolve the delay.

AIA Document A201 – 2017. Copyright © 1911, 1915, 1918, 1925, 1937, 1951, 1958, 1961, 1963, 1966, 1970, 1976, 1987, 1997, 2007 and 2017. All rights reserved. "The American Institute of Architects," "American Institute of Architects," "AIA," the AIA Logo, and "AIA Contract Documents" are trademarks of The American Institute of Architects. This draft was produced at 12:48:57 ET on 03/03/2025 under Order No.3104239075 which expires on 06/30/2025, is not for resale, is licensed for one-time use only, and may only be used in accordance with the AIA Contract Documents® Terms of Service. To report copyright violations, e-mail docinfo@aiacontracts.com.
User Notes: (793080888)

§ 8.3.4 After providing reasonable notice to the Contractor, the Owner may implement any remedy granted it by the Contract Documents to address Contractor-caused delay(s), including remedies permitted by Section 2.5, Section 6.1, Section 7.3, and Section 9.5.

§ 8.3.5 Claims relating to time shall be made in accordance with applicable provisions of Article 15.
§ 8.3.3 This Section 8.3 does not preclude recovery of damages for delay by the Owner under other provisions of the Contract Documents.

ARTICLE 9 PAYMENTS AND COMPLETION

§ 9.1 Contract Sum

§ 9.1.1 The Contract Sum is stated in the Agreement and, including authorized adjustments, is the total amount payable by the Owner to the Contractor for performance of the Work under the Contract Documents.

§ 9.1.2 If unit prices are stated in the Contract Documents or subsequently agreed upon, and if quantities originally contemplated are materially changed so that application of such unit prices to the actual quantities causes substantial inequity to the Owner or Contractor, the applicable unit prices shall be equitably adjusted.

§ 9.2 Schedule of Values

Where the Contract is based on a stipulated sum or Guaranteed Maximum Price, the Contractor shall submit a schedule of values to the Architect before the first Application for Payment, allocating the entire Contract Sum to the various portions of the Work in relation to each portion's actual cost and in sufficient detail to accurately quantify completion of the Work. The schedule of values shall be prepared in the form, and supported by the data to substantiate its accuracy, required by the Architect and shall be approved by the Owner. This schedule, unless objected to by the Architect or Owner, shall be used as a basis for reviewing the Contractor's Applications for Payment. Any changes to the schedule of values shall be submitted to the Architect and supported by such data to substantiate its accuracy as the Architect may require, and unless objected to by the Architect, shall be used as a basis for reviewing the Contractor's subsequent Applications for Payment.

§ 9.3 Applications for Payment

§ 9.3.1 At least ten days before the date established for each progress payment, the Contractor shall submit to the Owner's Representative Consultant and Architect a pencil draw of the proposed application for payment for Costs incurred during that month. Any invoices for Costs that are not included in such pencil draw will be held over until the next monthly pay period. The amount agreed to at the pencil draw review meeting shall be processed and submitted as a payment application per the Contract Documents. The application shall be notarized, if required, and supported by all data substantiating the Contractor's right to payment that the Owner or Architect require, such as copies of requisitions, and releases and waivers of liens from Subcontractors and suppliers, and shall reflect retainage if provided for in the Contract Documents.

§ 9.3.1.1 As provided in Section 7.3.9, such applications may include requests for payment on account of changes in the Work that have been properly authorized by Construction Change Directives, or by interim determinations of the Architect, but not yet included in Change Orders.

§ 9.3.1.2 Applications for Payment shall not include requests for payment for portions of the Work for which the Contractor does not intend to pay a Subcontractor or supplier, unless such Work has been performed by others whom the Contractor intends to pay.

§ 9.3.2 Unless otherwise provided in the Contract Documents, payments shall be made on account of materials and equipment delivered and suitably stored at the site for subsequent incorporation in the Work. If approved in advance by the Owner, payment may similarly be made for materials and equipment suitably stored off the site at a location agreed upon in writing. Payment for materials and equipment stored on or off the site shall be conditioned upon compliance by the Contractor with procedures satisfactory to the Owner to establish the Owner's title to such materials and equipment or otherwise protect the Owner's interest, as required by Section 3.4.7, and shall include the costs of applicable insurance, storage, and transportation to the site, for such materials and equipment stored off the site.

§ 9.3.3 The Contractor warrants that title to all Work covered by an Application for Payment will pass to the Owner no later than the time of payment. The Contractor further warrants that upon submittal of an Application for

AIA Document A201 – 2017. Copyright © 1911, 1915, 1918, 1925, 1937, 1951, 1958, 1961, 1963, 1966, 1970, 1976, 1987, 1997, 2007 and 2017. All rights reserved. "The American Institute of Architects," "American Institute of Architects," "AIA," the AIA Logo, and "AIA Contract Documents" are trademarks of The American Institute of Architects. This draft was produced at 12:48:57 ET on 03/03/2025 under Order No.3104239075 which expires on 06/30/2025, is not for resale, is licensed for one-time use only, and may only be used in accordance with the AIA Contract Documents® Terms of Service. To report copyright violations, e-mail docinfo@aiacontracts.com.
User Notes: (793080888)

Payment all Work for which Certificates for Payment have been previously issued and payments received from the Owner shall, to the best of the Contractor's knowledge, information, and belief, be free and clear of liens, claims, security interests, or encumbrances, in favor of the Contractor, Subcontractors, suppliers, or other persons or entities that provided labor, materials, and equipment relating to the Work.

§ 9.3.4 The Owner shall not be required to pay for unassembled materials, such as mill steel, extrusions for windows, and incomplete assemblies.

§ 9.3.5 The Contractor's first Application of Payment is considered incomplete unless, in addition to the requirements described below, all of the following items are also included with the Application of Payment: (i) Performance and Payment Bonds, if required; (ii) Certificate of Insurance, as required; (iii) Affidavits that the surety and insurance company or companies meet the requirements in Article 11.7; (iv) CPM Schedule for the Project; (v) Completed Schedule of Values for the Project.

Each Application for Payment shall be in the form of an AIA G702 and G703 unless otherwise approved by the Owner and shall be accompanied by the following, all in form and substance satisfactory to the Owner:

.1 a properly executed and notarized affidavit or sworn statement in statutory form (or if there is no applicable statutory form, in a form acceptable to the Owner) from the Contractor and all Subcontractors attesting to the amounts previously paid, amounts currently due, and amounts expected to become due to those providing labor or materials for the Work to them under a contract;

.2 properly executed unconditional releases of lien and claim establishing payment or satisfaction of all obligations to those providing labor or materials for the Work for which the Owner has previously made payment; except the application for Final Payment is governed by Section 9.10.2;

.3 properly executed conditional releases of lien and claim for the Work for which payment is being requested, except the application for Final Payment is governed by Section 9.10.2;

.4 An updated schedule of values, which unless objected to by the Architect shall be used as a basis for reviewing the Contractor's Application for Payment.

.5 A narrative describing in detail any changes to the schedule of values.

.6 An updated schedule with written narrative summarizing the progress of the Project, including behind schedule Work that may adversely affect the critical path of the Work. If such behind schedule Work would or could potentially affect the timely completion of the Work, the Contractor must also include a recovery plan describing in sufficient detail of overtime, multiple shifts and any other measures necessary to complete the Work within the Contract Time.

.7 Initial or updated insurance documentation and/or bond documentation evidencing compliance with the requirements of the Contract Documents.

§ 9.4 Certificates for Payment

§ 9.4.1 The Architect will, within seven days after receipt of the Contractor's Application for Payment, either (1) issue to the Owner a Certificate for Payment in the full amount of the Application for Payment, with a copy to the Contractor; or (2) issue to the Owner a Certificate for Payment for such amount as the Architect determines is properly due, and notify the Contractor and Owner of the Architect's reasons for withholding certification in part as provided in Section 9.5.1; or (3) withhold certification of the entire Application for Payment, and notify the Contractor and Owner of the Architect's reason for withholding certification in whole as provided in Section 9.5.1.

§ 9.4.2 The issuance of a Certificate for Payment will constitute a representation by the Architect to the Owner, based on the Architect's evaluation of the Work and the data in the Application for Payment, that, to the best of the Architect's knowledge, information, and belief, the Work has progressed to the point indicated, the quality of the Work is in accordance with the Contract Documents, and that the Contractor is entitled to payment in the amount certified. The foregoing representations are subject to an evaluation of the Work for conformance with the Contract Documents upon Substantial Completion, to results of subsequent tests and inspections, to correction of minor deviations from the Contract Documents prior to completion, and to specific qualifications expressed by the Architect. However, the issuance of a Certificate for Payment will not be a representation that the Architect has (1) made exhaustive or continuous on-site inspections to check the quality or quantity of the Work; (2) reviewed construction means, methods, techniques, sequences, or procedures; (3) reviewed copies of requisitions received from Subcontractors and suppliers and other data requested by the Owner to substantiate the Contractor's right to payment; or (4) made examination to ascertain how or for what purpose the Contractor has used money previously paid on account of the Contract Sum.

AIA Document A201 – 2017. Copyright © 1911, 1915, 1918, 1925, 1937, 1951, 1958, 1961, 1963, 1966, 1970, 1976, 1987, 1997, 2007 and 2017. All rights reserved. "The American Institute of Architects," "American Institute of Architects," "AIA," the AIA Logo, and "AIA Contract Documents" are trademarks of The American Institute of Architects. This draft was produced at 12:48:57 ET on 03/03/2025 under Order No.3104239075 which expires on 06/30/2025, is not for resale, is licensed for one-time use only, and may only be used in accordance with the AIA Contract Documents® Terms of Service. To report copyright violations, e-mail docinfo@aiacontracts.com.
User Notes: (793080888)

§ 9.5 Decisions to Withhold Certification

§ 9.5.1 Certification of any Application for Payment failing to strictly conform with the requirements of this Article 9 shall be withheld as incomplete. The Architect shall inform the Contractor and Owner of the deficiencies in the Application for Payment.

§ 9.5.2 The Architect may withhold a Certificate for Payment in whole or in part, to the extent reasonably necessary to protect the Owner, if in the Architect's opinion the representations to the Owner required by Section 9.4.2 cannot be made. If the Architect is unable to certify payment in the amount of the Application, the Architect will notify the Contractor and Owner as provided in Section 9.4.1. If the Contractor and Architect cannot agree on a revised amount, the Architect will promptly issue a Certificate for Payment for the amount for which the Architect is able to make such representations to the Owner. The Architect may also withhold a Certificate for Payment or, because of subsequently discovered evidence, may nullify the whole or a part of a Certificate for Payment previously issued, to such extent as may be necessary in the Architect's opinion to protect the Owner from any loss for which the Contractor is responsible, including loss resulting from acts and omissions described in Section 3.3.2 or because of

- **.1** defective or non-conforming Work not remedied;
- **.2** third party claims filed or reasonable evidence indicating probable filing of such claims, including claims for non-payment by members of the Construction Team, unless security acceptable to the Owner is provided by the Contractor;
- **.3** failure of the Contractor to make payments properly to Subcontractors or suppliers for labor, materials or equipment;
- **.4** reasonable evidence that the Work cannot be completed for the unpaid balance of the Contract Sum;
- **.5** damage to the Owner or a Separate Contractor;
- **.6** reasonable evidence that the Work will not be completed by milestone dates or within the Contract Time, and that the unpaid balance of the Contract Sum would not be adequate to cover actual or liquidated damages for the anticipated delay; or
- **.7** failure to perform any obligation of the Contract Documents.

§ 9.5.3 When either party disputes the Architect's decision regarding a Certificate for Payment under Section 9.5.1, in whole or in part, that party may submit a Claim in accordance with Article 15. If the Contractor disputes any good faith determination by the Owner with regard to any Certificate of Payment, or amount paid by the Owner in respect thereof, the Contractor shall nevertheless expeditiously continue to prosecute the Work while such dispute is being resolved in accordance with the provisions of Article 15. Where the Architect is made aware that it has Certified an Application for Payment in error based on an incomplete or incorrect Application for Payment, the Architect shall rescind and withhold its Certification pending correction of the Application for Payment.

§ 9.5.4 When the reasons for withholding certification are removed, certification will be made for amounts previously withheld.

§ 9.5.5 The Owner may, at its sole option, issue joint checks to the Contractor and to any Subcontractor or supplier to whom the Contractor failed to make payment, or that the Owner believes there is a reasonable risk the Contractor may fail to make payment, for Work properly performed or material or equipment suitably delivered. If the Owner makes payments by joint check, the Owner shall notify the Architect and the Contractor shall reflect such payment on its next Application for Payment.

§ 9.6 Progress Payments

§ 9.6.1 After the Architect has issued a Certificate for Payment, the Owner shall make payment in the manner and within the time provided in the Contract Documents, and shall so notify the Architect. Notwithstanding the Architect's Certification, the Owner may withhold payment, in whole or in part, if the Application for Payment is incomplete in any way or the Owner makes a reasonable determination that the Application for Payment is inaccurate pending the resolution of a Claim in accordance with Article 15.

§ 9.6.2 The Contractor shall pay each Subcontractor, no later than seven days after receipt of payment from the Owner, the amount to which the Subcontractor is entitled, reflecting percentages actually retained from payments to the Contractor on account of the Subcontractor's portion of the Work. The Contractor shall, by appropriate agreement with each Subcontractor, require each Subcontractor to make payments to Sub-subcontractors in a similar manner.

AIA Document A201 – 2017. Copyright © 1911, 1915, 1918, 1925, 1937, 1951, 1958, 1961, 1963, 1966, 1970, 1976, 1987, 1997, 2007 and 2017. All rights reserved. "The American Institute of Architects," "American Institute of Architects," "AIA," the AIA Logo, and "AIA Contract Documents" are trademarks of The American Institute of Architects. This draft was produced at 12:48:57 ET on 03/03/2025 under Order No.3104239075 which expires on 06/30/2025, is not for resale, is licensed for one-time use only, and may only be used in accordance with the AIA Contract Documents® Terms of Service. To report copyright violations, e-mail docinfo@aiacontracts.com.
User Notes: (793080888)

§ 9.6.3 The Architect will, on request, furnish to a Subcontractor, if practicable, information regarding percentages of completion or amounts applied for by the Contractor and action taken thereon by the Architect and Owner on account of portions of the Work done by such Subcontractor.

§ 9.6.4 The Owner has the right to request written evidence from the Contractor that the Contractor has properly paid Subcontractors and suppliers amounts paid by the Owner to the Contractor for subcontracted Work. If the Contractor fails to furnish such evidence within seven days, the Owner shall have the right to contact Subcontractors and suppliers to ascertain whether they have been properly paid. Neither the Owner nor Architect shall have an obligation to pay, or to see to the payment of money to, a Subcontractor or supplier, except as may otherwise be required by law.

§ 9.6.5 The Contractor's payments to suppliers shall be treated in a manner similar to that provided in Sections 9.6.2, 9.6.3 and 9.6.4.

§ 9.6.6 A Certificate for Payment, a progress payment, or partial or entire use or occupancy of the Project by the Owner shall not constitute acceptance of Work not in accordance with the Contract Documents.

§ 9.6.7 Payments received by the Contractor for Work properly performed by Subcontractors or provided by suppliers shall be held in trust by the Contractor for those Subcontractors or suppliers who performed Work or furnished materials, or both, under contract with the Contractor for which payment was made by the Owner. Unless required otherwise by statute, nothing contained herein shall require money to be placed in a separate account and not commingled with money of the Contractor or require payment to Subcontractors or suppliers when the terms of their agreement with the Contractor permit the Contractor to withhold it.

§ 9.6.8 Provided the Owner has fulfilled its payment obligations under the Contract Documents, the Contractor shall defend and indemnify the Owner and its Architect and Owner's Representative Consultant from all loss, liability, damage or expense, including joint check fees, lien discharge bond premiums, reasonable attorney's fees, and litigation expenses, arising out of any lien claim or other claim for payment by any Subcontractor or supplier of any tier. Upon request by the Owner, the Contractor shall immediately discharge any such lien at its own cost. Upon receipt of notice of a lien claim or other claim for payment affecting title to the Work or Project, the Owner and Contractor shall notify the other of the lien or claim. The Contractor shall pay all attorney fees incurred by the Owner to enforce the provisions of this Section 9.6.8.

§ 9.6.9 Owner shall retain out of each progress payment a "Retainage" as provided in the Contract Documents. Retainage will be paid upon Final Completion and acceptance of the Work in accordance with Section 9.10. Upon mutual agreement of the Owner, the Architect and the Contractor, payment in full may be made to Subcontractors whose Work is fully completed during early stages of the Project.

§ 9.7 Failure of Payment

If the Owner is in default of making undisputed payments to the Contractor in accordance with the Contract Documents for more than thirty (30) consecutive days, the Contractor may, upon seven (7) additional days' notice to the Owner and Architect, stop the Work until payment of the amount owing has been received. The Contract Time shall be extended appropriately, and the Contract Sum shall be increased by the amount of the Contractor's reasonable costs of shutdown, delay and start-up, plus interest as provided for in the Contract Documents.

§ 9.8 Substantial Completion

§ 9.8.1 Substantial Completion is the stage in the progress of the Work when the Work or designated portion thereof is sufficiently complete in accordance with the Contract Documents so that the Owner can occupy or utilize the Work for its intended use; provided, however, that as a condition precedent to Substantial Completion, the Owner has received all certificates of occupancy and any other permits, approvals, licenses, or any other certifications necessary for the beneficial occupancy or intended use of the Project.

§ 9.8.2 When the Contractor considers that the Work, or a portion thereof which the Owner agrees to accept separately, is substantially complete, the Contractor shall prepare and submit to the Architect a comprehensive list of items to be obtained, completed, or corrected prior to final payment along with a schedule for completing them.

AIA Document A201 – 2017. Copyright © 1911, 1915, 1918, 1925, 1937, 1951, 1958, 1961, 1963, 1966, 1970, 1976, 1987, 1997, 2007 and 2017. All rights reserved. "The American Institute of Architects," "American Institute of Architects," "AIA," the AIA Logo, and "AIA Contract Documents" are trademarks of The American Institute of Architects. This draft was produced at 12:48:57 ET on 03/03/2025 under Order No.3104239075 which expires on 06/30/2025, is not for resale, is licensed for one-time use only, and may only be used in accordance with the AIA Contract Documents® Terms of Service. To report copyright violations, e-mail docinfo@aiacontracts.com.
User Notes: (793080888)

Failure to include an item on such list does not alter the responsibility of the Contractor to complete all Work in accordance with the Contract Documents.

§ 9.8.2.1 The Work shall not be considered ready for Substantial Completion review until testing and commissioning of all systems included in the Work is complete and all systems are operational in accordance with the Contract Documents and finishing the Work will not materially interfere or hamper the Owner's or Project occupant's normal operations. All occupational permits by governmental authorities with jurisdiction are also required, and temporary permits are only allowable with the Owner and Architect's written consent.

§ 9.8.3 Upon receipt of the Contractor's list and schedule, the Architect will make an inspection to determine whether the Work or designated portion thereof is substantially complete and the schedule for completing the Work is acceptable. If the Architect's inspection discloses any item, whether or not included on the Contractor's list, which is not sufficiently complete in accordance with the Contract Documents so that the Owner can occupy or utilize the Work or designated portion thereof for its intended use, the Contractor shall, before issuance of the Certificate of Substantial Completion, complete or correct such item upon notification by the Architect. In such case, the Contractor shall then submit a request for another inspection by the Architect to determine Substantial Completion.

§ 9.8.4 When the Work or designated portion thereof is substantially complete and the Contractor's schedule for completing the remainder of it is acceptable to the Owner and Architect, the Architect will prepare a Certificate of Substantial Completion utilizing an AIA G704 form that shall establish the date of Substantial Completion; establish responsibilities of the Owner and Contractor for security, maintenance, heat, utilities, damage to the Work and insurance; and fix the time within which the Contractor shall finish all items on the list accompanying the Certificate. Warranties required by the Contract Documents shall commence on the date of Substantial Completion of the Work or designated portion thereof unless otherwise provided in the Certificate of Substantial Completion.

§ 9.8.5 The Certificate of Substantial Completion shall be submitted to the Owner and Contractor for their written acceptance of responsibilities assigned to them in the Certificate. Upon such acceptance, the Owner may, in its sole determination, withhold any amount of retainage it deems sufficient to secure completion or correction of Work that is incomplete or not in accordance with the requirements of the Contract Documents and to secure performance of any outstanding obligation of the Contract. Substantial Completion shall not be considered obtained until the Certificate of Substantial Completion is accepted by the Owner, which acceptance may be withheld if the Owner reasonably believes the Certificate of Substantial Completion was issued in error.

§ 9.8.6 The Owner's use of the Work, payment of retainage, final payment, or a Certificate of Substantial Completion do not constitute acceptance of Work not complying with the requirements of the Contract Documents.

§ 9.9 Partial Occupancy or Use

§ 9.9.1 The Owner may occupy or use any completed or partially completed portion of the Work at any stage when such portion is designated by separate agreement with the Contractor, provided such occupancy or use is consented to by the insurer and authorized by public authorities having jurisdiction over the Project. Such partial occupancy or use may commence whether or not the portion is substantially complete, provided the Owner and Contractor have accepted in writing the responsibilities assigned to each of them for payments, retainage, if any, security, maintenance, heat, utilities, damage to the Work and insurance, and have agreed in writing concerning the period for correction of the Work and commencement of warranties required by the Contract Documents. When the Contractor considers a portion substantially complete, the Contractor shall prepare and submit a list to the Architect as provided under Section 9.8.2. Consent of the Contractor to partial occupancy or use shall not be unreasonably withheld. The stage of the progress of the Work shall be determined by written agreement between the Owner and Contractor or, if no agreement is reached, by decision of the Architect.

§ 9.9.2 Immediately prior to such partial occupancy or use, the Owner, Contractor, and Architect shall jointly inspect the area to be occupied or portion of the Work to be used in order to determine and record the condition of the Work.

§ 9.9.3 Unless otherwise agreed upon, partial occupancy or use of a portion or portions of the Work shall not constitute acceptance of Work not complying with the requirements of the Contract Documents.

AIA Document A201 – 2017. Copyright © 1911, 1915, 1918, 1925, 1937, 1951, 1958, 1961, 1963, 1966, 1970, 1976, 1987, 1997, 2007 and 2017. All rights reserved. "The American Institute of Architects," "American Institute of Architects," "AIA," the AIA Logo, and "AIA Contract Documents" are trademarks of The American Institute of Architects. This draft was produced at 12:48:57 ET on 03/03/2025 under Order No.3104239075 which expires on 06/30/2025, is not for resale, is licensed for one-time use only, and may only be used in accordance with the AIA Contract Documents® Terms of Service. To report copyright violations, e-mail docinfo@aiacontracts.com.
User Notes: (793080888)

§ 9.10 Final Completion and Final Payment

§ 9.10.1 Upon receipt of the Contractor's notice that the Work is ready for final inspection and acceptance and upon receipt of a final Application for Payment, the Architect will promptly make such inspection. When the Architect finds the Work acceptable under the Contract Documents and the Contract fully performed, the Architect will promptly issue a final Certificate for Payment stating that to the best of the Architect's knowledge, information and belief, and on the basis of the Architect's on-site visits and inspections, the Work has been completed in accordance with the Contract Documents and that the entire balance found to be due the Contractor and noted in the final Certificate is due and payable. The Architect's final Certificate for Payment will constitute a further representation that conditions listed in Section 9.10.2 as precedent to the Contractor's being entitled to final payment have been fulfilled.

§ 9.10.2 Neither final payment nor any remaining retained percentage shall become due until the Contractor submits to the Architect (1) an affidavit that payrolls, bills for materials and equipment, and other indebtedness connected with the Work for which the Owner or the Owner's property might be responsible or encumbered (less amounts withheld by Owner) have been paid or otherwise satisfied, (2) a certificate evidencing that insurance required by the Contract Documents to remain in force after final payment is currently in effect, (3) a written statement that the Contractor knows of no reason that the insurance will not be renewable to cover the period required by the Contract Documents, (4) consent of surety, if any, to final payment, (5) documentation of any special warranties, such as manufacturers' warranties or specific Subcontractor warranties, (6) if required by the Owner, other data establishing payment or satisfaction of obligations, such as receipts and releases and waivers of liens, claims, security interests, or encumbrances arising out of the Contract, to the extent and in such form as may be designated by the Owner, and (7) any outstanding Record Documents have been delivered to the Owner and Architect. If a Subcontractor refuses to furnish a release or waiver required by the Owner, the Contractor may furnish a bond satisfactory to the Owner to indemnify the Owner against such lien, claim, security interest, or encumbrance. If a lien, claim, security interest, or encumbrance remains unsatisfied after payments are made, the Contractor shall refund to the Owner all money that the Owner may be compelled to pay in discharging the lien, claim, security interest, or encumbrance, including all costs and reasonable attorneys' fees.

§ 9.10.3 If, after Substantial Completion of the Work, final completion thereof is materially delayed through no fault of the Contractor or by issuance of Change Orders affecting final completion, and the Architect so confirms, the Owner shall, upon application by the Contractor and certification by the Architect, and without terminating the Contract, make payment of the balance due for that portion of the Work fully completed, corrected, and accepted. If the remaining balance for Work not fully completed or corrected is less than retainage stipulated in the Contract Documents, and if bonds have been furnished, the written consent of the surety to payment of the balance due for that portion of the Work fully completed and accepted shall be submitted by the Contractor to the Architect prior to certification of such payment. Such payment shall be made under terms and conditions governing final payment, except that it shall not constitute a waiver of Claims.

§ 9.10.4 The making of final payment shall constitute a waiver of Claims by the Owner except those arising from

- **.1** liens, Claims, security interests, or encumbrances arising out of the Contract and unsettled;
- **.2** failure of the Work to comply with the requirements of the Contract Documents;
- **.3** terms of special warranties required by the Contract Documents; or
- **.4** audits performed by the Owner, if permitted by the Contract Documents, after final payment.

§ 9.10.5 Acceptance of final payment by the Contractor, a Subcontractor, or a supplier, shall constitute a waiver of claims by that payee except those previously made in writing and identified by that payee as unsettled at the time of final Application for Payment.

§ 9.10.6 Contractor will provide attic stock materials as required by the Contract Documents. Materials shall be boxed, labeled, and stored as directed by the Owner.

§ 9.10.7 If the aggregate of previous payments made by the Owner exceeds the amount due the Contractor, the Contractor shall immediately reimburse the difference to the Owner.

§ 9.11 AUDITS BY THE OWNER

§ 9.11.1 The Contractor agrees that the Owner or any of its duly authorized representatives shall, until the expiration of the record retention period (as described in Section 9.11.2), have access to and the right to examine where

AIA Document A201 – 2017. Copyright © 1911, 1915, 1918, 1925, 1937, 1951, 1958, 1961, 1963, 1966, 1970, 1976, 1987, 1997, 2007 and 2017. All rights reserved. "The American Institute of Architects," "American Institute of Architects," "AIA," the AIA Logo, and "AIA Contract Documents" are trademarks of The American Institute of Architects. This draft was produced at 12:48:57 ET on 03/03/2025 under Order No.3104239075 which expires on 06/30/2025, is not for resale, is licensed for one-time use only, and may only be used in accordance with the AIA Contract Documents® Terms of Service. To report copyright violations, e-mail docinfo@aiacontracts.com.
User Notes: (793080888)

pertinent to verifying the Cost of the Work or other items reimbursed to Contractor under the Agreement on the basis of costs, books, documents, records, contracts, correspondence, instructions, receipts, vouchers, purchase orders, memoranda, papers, and all other records of the Contractor related to the Agreement for any reason.

§ 9.11.2 The Contractor shall maintain in accordance with generally accepted accounting principles separate records and accounts of its Services and transactions on behalf of the Owner in connection with the Work and shall make such records and accounts available to the Owner for inspection and audit during normal business hours and upon reasonable prior notice. Records shall be kept in such form and detail as the Owner may reasonably request. Such records shall include time sheets, invoices from the Contractor and its Subcontractors memoranda and analyses in support of management decisions, and such other primary records as necessary to support and justify all business conducted in connection with the Work, but shall not include internal memoranda or reports, communications or discussions with incidental references to the Work or documents which discuss multiple projects. Such records will be kept by the Contractor for a period not less than seven (7) years.

§ 9.11.3 The Contractor shall include in all its Subcontracts under the Agreement a provision to the effect that the Subcontractors agree that the Owner or any of its duly authorized representatives shall, until expiration of three (3) years after Final Payment under the Subcontracts and Supply Agreements, have access to and the right to examine where directly pertinent to verifying the cost of change orders or other items reimbursed to such Subcontractor on the basis of cost, books, documents, papers, and records of such consultants, involving transactions related to the Work.

ARTICLE 10 PROTECTION OF PERSONS AND PROPERTY

§ 10.1 Safety Precautions and Programs

§ 10.1.1 The Contractor is responsible for initiating, maintaining, and supervising all safety precautions and programs in connection with the performance of the Contract and the Project site.

§ 10.1.2 The Contractor shall develop and implement a written health and safety plan that addresses the requirements of this Article 10 and complies with all Applicable Law. The Contractor shall provide the Owner a copy of the health and safety plan prior to commencement of Work and shall include it with the Record Documents. The Owner has no duty to review the plan and shall assume no duty by doing so. The plan shall be included in all bidding documents issued by the Contractor, and the requirements of the plan shall be applicable to all members of the Construction Team.

§ 10.2 Safety of Persons and Property

§ 10.2.1 The Contractor shall take adequate precautions for safety of, and shall provide reasonable protection to prevent damage, injury, or loss to

- **.1** all individuals at the Project site as well as other persons who may be affected by the Contractor's activities in connection with performing the Work;
- **.2** the Work and materials and equipment to be incorporated therein, whether in storage on or off the site, under care, custody, or control of the Contractor, a Subcontractor, or a Sub-subcontractor; and
- **.3** other property at the site or adjacent thereto, such as trees, shrubs, lawns, walks, pavements, roadways, structures, and utilities not designated for removal, relocation, or replacement in the course of construction.

§ 10.2.2 The Contractor shall comply with, and give all notices and requirements of Applicable Law bearing on safety of persons or property or their protection from damage, injury, or loss.

§ 10.2.3 The Contractor shall implement, erect, and maintain, as required by existing conditions and performance of the Contract, adequate safeguards for safety and protection, including posting danger signs and other warnings against hazards; promulgating safety regulations; and notifying the owners and users of adjacent sites and utilities of the safeguards.

§ 10.2.4 When use or storage of flammable, explosive, or other hazardous materials or equipment, or unusual methods are necessary for execution of the Work, the Contractor shall address the care of them in its health and safety plan and shall exercise utmost care and carry on such activities under supervision of properly qualified personnel. When in the course of the Work use or storage of explosives or other hazardous materials or equipment or unusual construction methods are necessary, the Contractor shall give the Owner reasonable advance notice.

AIA Document A201 – 2017. Copyright © 1911, 1915, 1918, 1925, 1937, 1951, 1958, 1961, 1963, 1966, 1970, 1976, 1987, 1997, 2007 and 2017. All rights reserved. "The American Institute of Architects," "American Institute of Architects," "AIA," the AIA Logo, and "AIA Contract Documents" are trademarks of The American Institute of Architects. This draft was produced at 12:48:57 ET on 03/03/2025 under Order No.3104239075 which expires on 06/30/2025, is not for resale, is licensed for one-time use only, and may only be used in accordance with the AIA Contract Documents® Terms of Service. To report copyright violations, e-mail docinfo@aiacontracts.com.
User Notes: (793080888)

.1 No explosives will be permitted on the Owner's premises unless written permission is given by the Owner not less than 72 hours in advance of the time of delivery of such explosives. All risks, regardless of the Owner's approval, associated with the storage, handling and use of explosives are solely borne by the Contractor, as are any costs associated with damages, injuries or losses arising out of the use of such explosives.

.2 The use of disposal or flammable liquids or other combustible materials shall be handled in accordance with Applicable Law.

§ 10.2.5 The Contractor shall promptly remedy damage and loss to property or the Work caused in whole or in part by the Contractor, a Subcontractor, a Sub-subcontractor, or anyone directly or indirectly employed by any of them, or by anyone for whose acts they may be liable and for which the Contractor is responsible under Sections 10.2.1.2 and 10.2.1.3. The Contractor shall remedy such damage and loss at its expense, without recovery from the Owner, under the Contract Sum or Guaranteed Maximum Price, or use of any contingency or otherwise. The Contractor may make a Claim for the cost to remedy the damage or loss to the extent such damage or loss is attributable to acts or omissions of the Owner or Architect or anyone directly or indirectly employed by either of them, or by anyone for whose acts either of them may be liable, and not attributable to the fault or negligence of the Contractor. The foregoing obligations of the Contractor are in addition to the Contractor's obligations under Section 3.18, but do not bar the Contractor from recovering sums of money paid by the available property insurer for the loss if the Contractor has fulfilled its duties under this Article 10 and satisfied the applicable deductible.

§ 10.2.6 The Contractor shall designate a responsible member of the Contractor's organization at the site whose duty shall be the prevention of accidents. This person shall be the Contractor's superintendent unless otherwise designated by the Contractor in writing to the Owner and Architect.

§ 10.2.7 The Contractor shall not permit any part of the construction or site to be loaded so as to cause damage or create an unsafe condition. When required by Applicable Law or for the safety of the Work, the Contractor shall shore up, brace, underpin, and protect foundations and other portion of existing structures that are in any way affected by the Work. Before commencement of any part of the Work, the Contractor shall serve any and all notices required to be given to adjoining land and/or property owners or other parties. The Contractor shall take reasonable steps to document conditions prior to commencing Work that may impact adjoining land and/or property and take reasonable steps to monitor and document disturbances such as subsidence or vibration to adjoining land and/or property.

§ 10.2.8 Injury or Damage to Person or Property

If either party suffers injury or damage to person or property, or if a party or someone it is legally or contractually responsible for causes injury or damage to person or property, notice of the injury or damage, whether or not insured, shall be given to the other party within a reasonable time not exceeding seven days after discovery. The notice shall provide sufficient detail to enable the other party to investigate the matter and will include all known Details of the incident and statements of witnesses. If death, serious personal injury, or serious property damage occurs, the accident shall be reported immediately by telephone or messenger to the other party. The obligations in this Section 10.2.8 supplement reporting obligations imposed by Applicable Law.

§ 10.3 Hazardous Materials and Substances

§ 10.3.1 The Contractor is responsible for compliance with any requirements included in the Contract Documents and Applicable Law regarding hazardous materials or substances. If the Contractor encounters a hazardous material or substance not addressed in the Contract Documents and if reasonable precautions will be inadequate to prevent foreseeable bodily injury or death to persons resulting from a material or substance, including but not limited to asbestos or polychlorinated biphenyl (PCB), encountered on the site by the Contractor, the Contractor shall, upon recognizing the condition, immediately stop Work in the affected area and notify the Owner and Architect of the condition. The Contractor shall request form the Owner, carefully review, and take appropriate action based on existing documentation that may be relevant to the existence of hazardous materials including past studies, report, and due care plans. The Contractor make appropriate recommendations to the Owner if it believes further investigation is required.

§ 10.3.1.1 The Contractor shall immediately notify the Owner and Architect if any member of the Construction Team receives notice of an inquiry, test, investigation, enforcement proceeding, environmental audit, or the like by for any hazardous materials at or emanating from the Project site.

AIA Document A201 – 2017. Copyright © 1911, 1915, 1918, 1925, 1937, 1951, 1958, 1961, 1963, 1966, 1970, 1976, 1987, 1997, 2007 and 2017. All rights reserved. "The American Institute of Architects," "American Institute of Architects," "AIA," the AIA Logo, and "AIA Contract Documents" are trademarks of The American Institute of Architects. This draft was produced at 12:48:57 ET on 03/03/2025 under Order No.3104239075 which expires on 06/30/2025, is not for resale, is licensed for one-time use only, and may only be used in accordance with the AIA Contract Documents® Terms of Service. To report copyright violations, e-mail docinfo@aiacontracts.com.
User Notes: (793080888)

§ 10.3.2 Upon receipt of the Contractor's notice, the Owner shall obtain the services of a licensed laboratory to verify the presence or absence of the material or substance reported by the Contractor and, in the event such material or substance is found to be present, to cause it to be rendered harmless. When the material or substance has been rendered harmless, Work in the affected area shall resume upon written agreement of the Owner and Contractor. The term "rendered harmless" shall be interpreted to mean that the levels are less than any applicable exposure standards set forth in Applicable Law. By Change Order, the Contract Time shall be extended appropriately and the Contract Sum shall be increased by the amount of the Contractor's reasonable additional costs of shutdown, delay, and start-up.

§ 10.3.3 To the fullest extent permitted by law, the Owner shall indemnify and hold harmless the Contractor, Subcontractors, Architect, Architect's consultants, and agents and employees of any of them from and against claims, damages, losses, and expenses, including but not limited to attorneys' fees, arising out of or resulting from performance of the Work in the affected area if in fact the material or substance presents the risk of bodily injury or death as described in Section 10.3.1 and has not been rendered harmless, provided that such claim, damage, loss, or expense is attributable to bodily injury, sickness, disease or death, or to injury to or destruction of tangible property (other than the Work itself), except to the extent that such damage, loss, or expense is due to the fault or negligence or failure of an obligation under the Contract Documents of the party seeking indemnity.

§ 10.3.4 The Owner shall not be responsible under this Section 10.3 for hazardous materials or substances the Construction Team brings to the site. The Contractor shall be responsible for the proper handling an disposal of hazardous materials brought to the site by the Construction Team.

§ 10.3.5 The Contractor shall reimburse the Owner for the cost and expense the Owner incurs for remediation of hazardous materials or substances, or for any fees, fines, or penalties imposed by any governmental agency related to hazardous materials or substances, the Construction Team brings to the site, or through the Construction Team's negligent action or inaction which makes worse existing or other hazardous conditions, except to the extent that the cost and expense are due to the fault or negligence of the Owner or the Owner's Separate Contractors.

§ 10.4 Emergencies

In an emergency affecting safety of persons or property, the Contractor shall act, at the Contractor's discretion, to prevent threatened damage, injury, or loss. Additional compensation or extension of time claimed by the Contractor on account of an emergency shall be determined as provided in Article 15 and Article 7.

ARTICLE 11 INSURANCE AND BONDS

§ 11.1 Contractor's Insurance and Bonds

§ 11.1.1 The Contractor shall purchase and maintain insurance of the types and limits of liability, containing the endorsements, and subject to the terms and conditions, as described in the Agreement or elsewhere in the Contract Documents. The Contractor shall purchase and maintain the required insurance from an insurance company or insurance companies lawfully authorized to issue insurance in the jurisdiction where the Project is located. The Owner, Owner's Representative Consultant, Architect, and Architect's consultants shall be named as additional insureds under the Contractor's commercial general liability policy or as otherwise described in the Contract Documents. The Contractor shall provide the Owner with documentation of the insurance coverage required by the Contract Documents, including certificates of insurances and endorsements for itself, Subcontractors, and Sub-subcontractors, and declarations sheets or certified copies of policies upon the Owner's request.

§ 11.1.2 The Contractor shall provide surety bonds of the types, for such penal sums, and subject to such terms and conditions as required by the Contract Documents. The Contractor shall purchase and maintain the required bonds from a company or companies lawfully authorized to issue surety bonds in the jurisdiction where the Project is located.

§ 11.1.3 Upon the request of any person or entity appearing to be a potential beneficiary of bonds covering payment of obligations arising under the Contract, the Contractor shall promptly furnish a copy of the bonds or shall authorize a copy to be furnished.

§ 11.1.4 Notice of Cancellation or Expiration of Contractor's Required Insurance. Within three business days of the date the Contractor becomes aware of any diminution in its coverage limits or an impending or actual, cancellation or

AIA Document A201 – 2017. Copyright © 1911, 1915, 1918, 1925, 1937, 1951, 1958, 1961, 1963, 1966, 1970, 1976, 1987, 1997, 2007 and 2017. All rights reserved. "The American Institute of Architects," "American Institute of Architects," "AIA," the AIA Logo, and "AIA Contract Documents" are trademarks of The American Institute of Architects. This draft was produced at 12:48:57 ET on 03/03/2025 under Order No.3104239075 which expires on 06/30/2025, is not for resale, is licensed for one-time use only, and may only be used in accordance with the AIA Contract Documents® Terms of Service. To report copyright violations, e-mail docinfo@aiacontracts.com.
User Notes: (793080888)

expiration of any insurance required by the Contract Documents, the Contractor shall provide written notice to the Owner of such diminution in limits or impending or actual cancellation or expiration. Upon receipt of notice from the Contractor, the Owner shall, unless the lapse in coverage arises from an act or omission of the Owner, have the right to stop the Work until the lapse in coverage has been cured by the procurement of replacement coverage by the Contractor. The Owner may also procure the insurance and, in such event, the Contractor shall pay the Owner for the cost of doing so. The furnishing of notice by the Contractor shall not relieve the Contractor of any contractual obligation to provide any required coverage. In the event the Contractor's renewal or replacement policy differs in any way from the previous policy, the Contractor shall also furnish the Owner with a certified copy of the renewal or replacement policy unless the Owner provides the Contractor with written consent to submit only a certificate of insurance. All renewal and replacement policies shall in form and substance satisfactory to the Owner and be written by carriers acceptable to the Owner.

§ 11.2 Owner's Insurance

§ 11.2.1 The Owner shall purchase and maintain insurance of the types and limits of liability, containing the endorsements, and subject to the terms and conditions, as described in the Agreement or elsewhere in the Contract Documents. The Owner shall purchase and maintain the required insurance from an insurance company or insurance companies lawfully authorized to issue insurance in the jurisdiction where the Project is located.

§ 11.2.2 Failure to Purchase Required Property Insurance. If the Owner fails to purchase and maintain the required property insurance, with all of the coverages and in the amounts described in the Agreement or elsewhere in the Contract Documents, the Owner shall inform the Contractor in writing prior to commencement of the Work. Upon receipt of notice from the Owner, the Contractor may delay commencement of the Work and may obtain insurance that will protect the interests of the Contractor, Subcontractors, and Sub-Subcontractors in the Work. When the failure to provide coverage has been cured or resolved, the Contract Sum and Contract Time shall be equitably adjusted. In the event the Owner fails to procure coverage, the Owner waives all rights against the Contractor, Subcontractors, and Sub-subcontractors to the extent the loss to the Owner would have been covered by the insurance to have been procured by the Owner. The cost of the insurance shall be charged to the Owner by a Change Order. If the Owner does not provide written notice, and the Contractor is damaged by the failure or neglect of the Owner to purchase or maintain the required insurance, the Owner shall reimburse the Contractor for all reasonable costs and damages attributable thereto.

§ 11.2.3 Notice of Cancellation or Expiration of Owner's Required Property Insurance. Within three business days of the date the Owner becomes aware of an impending or actual cancellation or expiration of any property insurance required by the Contract Documents, the Owner shall provide notice to the Contractor of such impending or actual cancellation or expiration. Unless the lapse in coverage arises from an act or omission of the Contractor: (1) the Contractor, upon receipt of notice from the Owner, shall have the right to stop the Work until the lapse in coverage has been cured by the procurement of replacement coverage by either the Owner or the Contractor; (2) the Contract Time and Contract Sum shall be equitably adjusted; and (3) the Owner waives all rights against the Contractor, Subcontractors, and Sub-subcontractors to the extent any loss to the Owner would have been covered by the insurance had it not expired or been cancelled. If the Contractor purchases replacement coverage, the cost of the insurance shall be charged to the Owner by an appropriate Change Order. The furnishing of notice by the Owner shall not relieve the Owner of any contractual obligation to provide required insurance.

§ 11.3 Waivers of Subrogation

§ 11.3.1 The Owner and Contractor waive all rights against (1) each other and any of their subcontractors, sub-subcontractors, agents, and employees, each of the other; (2) the Architect and Architect's consultants; and (3) Separate Contractors, if any, and any of their subcontractors, sub-subcontractors, agents, and employees, for damages caused by fire, or other causes of loss, to the extent those losses are covered by property insurance required by the Agreement or other property insurance applicable to the Project, except such rights as they have to proceeds of such insurance. The Owner or Contractor, as appropriate, shall require similar written waivers in favor of the individuals and entities identified above from the Architect, Architect's consultants, Separate Contractors, Subcontractors, and sub-subcontractors. The policies of insurance purchased and maintained by each person or entity agreeing to waive claims pursuant to this section 11.3.1 shall not prohibit this waiver of subrogation. This waiver of subrogation shall be effective as to a person or entity (1) even though that person or entity would otherwise have a duty of indemnification, contractual or otherwise, (2) even though that person or entity did not pay the insurance premium directly or indirectly, or (3) whether or not the person or entity had an insurable interest in the damaged property.

AIA Document A201 – 2017. Copyright © 1911, 1915, 1918, 1925, 1937, 1951, 1958, 1961, 1963, 1966, 1970, 1976, 1987, 1997, 2007 and 2017. All rights reserved. "The American Institute of Architects," "American Institute of Architects," "AIA," the AIA Logo, and "AIA Contract Documents" are trademarks of The American Institute of Architects. This draft was produced at 12:48:57 ET on 03/03/2025 under Order No.3104239075 which expires on 06/30/2025, is not for resale, is licensed for one-time use only, and may only be used in accordance with the AIA Contract Documents® Terms of Service. To report copyright violations, e-mail docinfo@aiacontracts.com.
User Notes: (793080888)

§ 11.3.2 If during the Project construction period the Owner insures properties, real or personal or both, at or adjacent to the site by property insurance under policies separate from those insuring the Project, or if after final payment property insurance is to be provided on the completed Project through a policy or policies other than those insuring the Project during the construction period, to the extent permissible by such policies, the Owner waives all rights in accordance with the terms of Section 11.3.1 for damages caused by fire or other causes of loss covered by this separate property insurance.

§ 11.4 Loss of Use, Business Interruption, and Delay in Completion Insurance
The Owner, at the Owner's option, may purchase and maintain insurance that will protect the Owner against loss of use of the Owner's property, or the inability to conduct normal operations, due to fire or other causes of loss. The Owner waives all rights of action against the Contractor and Architect for loss of use of the Owner's property, due to fire or other hazards however caused.

§11.5 Adjustment and Settlement of Insured Loss
§ 11.5.1 A loss insured under the property insurance required by the Agreement shall be adjusted by the Owner and made payable to the Owner for the insureds, as their interests may appear, subject to requirements of any applicable mortgagee clause and of Section 11.5.2. The Owner shall pay the Architect and Contractor their just shares of insurance proceeds received by the Owner, and by appropriate agreements the Architect and Contractor shall make payments to their consultants and Subcontractors in similar manner.

§ 11.5.2 Prior to settlement of an insured loss, the Owner shall notify the Contractor of the terms of the proposed settlement as well as the proposed allocation of the insurance proceeds. The Contractor shall have 14 days from receipt of notice to object to the proposed settlement or allocation of the proceeds. If the Contractor does not object, the Owner shall settle the loss and the Contractor shall be bound by the settlement and allocation. Upon receipt, the Owner shall deposit the insurance proceeds in a separate account and make the appropriate distributions. Thereafter, if no other agreement is made or the Owner does not terminate the Contract for convenience, the Owner and Contractor shall execute a Change Order for reconstruction of the damaged or destroyed Work in the amount allocated for that purpose. If the Contractor timely objects to either the terms of the proposed settlement or the allocation of the proceeds, the Owner may proceed to settle the insured loss, and any dispute between the Owner and Contractor arising out of the settlement or allocation of the proceeds shall be resolved pursuant to Article 15. Pending resolution of any dispute, the Owner may issue a Construction Change Directive for the reconstruction of the damaged or destroyed Work.

§ 11.5.3 The Contractor shall satisfy any deductible required by the Owner's property insurance as condition precedent to the Contractor's ability to claim funds for a loss that occurs to the Work before the Owner has accepted responsibility for it under Section 9.8 or Section 9.9.

ARTICLE 12 UNCOVERING AND CORRECTION OF WORK

§ 12.1 Uncovering of Work
§ 12.1.1 If a portion of the Work is covered contrary to the Architect's request or to requirements specifically expressed in the Contract Documents, it must, if requested in writing by the Architect, be uncovered for the Architect's examination and be replaced at the Contractor's expense without change in the Contract Time.

§ 12.1.2 If a portion of the Work has been covered that the Architect has not specifically requested to examine prior to its being covered, the Architect may request to see such Work and it shall be uncovered by the Contractor. If such Work is in accordance with the Contract Documents, the Contractor shall be entitled to an equitable adjustment to the Contract Sum and Contract Time as may be appropriate. If such Work is not in accordance with the Contract Documents, the costs of uncovering the Work, and the cost of correction, shall be at the Contractor's expense.

§ 12.2 Correction of Work
If, within the stipulated warranty period in Section 3.5.4, and after the date of (i) Substantial Completion and acceptance of the Work or any designated portion thereof or (ii) the completion of Work not finished at Substantial Completion, or within the terms of an applicable special warranty required by the Contract Documents (the "Correction Period"), any of the Work is found by the Owner to be Defective, the Contractor shall, without interfering materially with the Owner's facilities, personnel or operations, promptly cause it to be corrected, unless the Owner has previously specifically accepted such defect in writing. The Contractor shall bear all costs of

AIA Document A201 – 2017. Copyright © 1911, 1915, 1918, 1925, 1937, 1951, 1958, 1961, 1963, 1966, 1970, 1976, 1987, 1997, 2007 and 2017. All rights reserved. "The American Institute of Architects," "American Institute of Architects," "AIA," the AIA Logo, and "AIA Contract Documents" are trademarks of The American Institute of Architects. This draft was produced at 12:48:57 ET on 03/03/2025 under Order No.3104239075 which expires on 06/30/2025, is not for resale, is licensed for one-time use only, and may only be used in accordance with the AIA Contract Documents® Terms of Service. To report copyright violations, e-mail docinfo@aiacontracts.com.
User Notes: (793080888)

correcting rejected Work, without increase in the Guaranteed Maximum Price, and without use of any contingency, including any additional testing and inspections made necessary thereby. These obligations shall apply regardless of whether such Work has been fabricated, installed, or completed and shall survive acceptance of the Work and termination of the Agreement. Unless the Owner authorizes otherwise, Substantial Completion shall not commence the Correction Period for any equipment or systems that:

.1 Are not fully operational (equipment or systems shall not be considered fully operational if they are intended to provide service to any portion of the building which the Owner has not accepted as substantially complete); or

.2 Are not accepted by the Owner.

§ 12.2.1 Before Substantial Completion

The Contractor shall promptly correct Work rejected by the Architect or Owner for failing to conform to the requirements of the Contract Documents, discovered before Substantial Completion and whether or not fabricated, installed or completed. Costs of correcting such rejected Work, including additional testing and inspections, the cost of uncovering and replacement, and compensation for the Architect's or Owner's consultant's services and expenses made necessary thereby, shall be at the Contractor's expense without adjustment to the Contract Sum or Contract Time.

§ 12.2.2 After Substantial Completion

§ 12.2.2.1 In addition to the Contractor's obligations under Section 3.5, if, after the date of Substantial Completion of the Work or designated portion thereof or after the date for commencement of warranties established under Section 9.9.1, or by terms of any applicable special warranty required by the Contract Documents, any of the Work is found to be not in accordance with the requirements of the Contract Documents, the Contractor shall correct it at its cost, minimizing any interference with the Owner's facilities, personnel, or operations, promptly after receipt of notice from the Owner to do so, unless the Owner has previously given the Contractor a written acceptance of such condition. The Owner shall give such notice promptly after discovery of the condition. . If the Contractor fails to correct nonconforming Work within a reasonable time during that period after receipt of notice from the Owner or Architect, the Owner may correct it in accordance with Section 2.5 and charge the Contractor for the cost of doing so.

§ 12.2.2.2 The Contractor's obligation to correct non-conforming Work does not foreclose other remedies available to the Owner under the Contract Documents or Applicable Law.

§ 12.2.2.3 The Contractor's obligation to correct non-conforming Work under this Section 12.2.2 does not extend beyond the period in which the Owner may commence a legal action against the Contractor for breach of its obligations under the Contract..

§ 12.2.3 The Contractor shall remove from the site portions of the Work that are not in accordance with the requirements of the Contract Documents and are neither corrected by the Contractor nor accepted by the Owner.

§ 12.2.4 The Contractor shall bear the cost of correcting destroyed or damaged construction of the Owner or Separate Contractors, whether completed or partially completed, caused by the Contractor's correction or removal of Work that is not in accordance with the requirements of the Contract Documents.

§ 12.3 Acceptance of Nonconforming Work

If the Owner prefers to accept Work that is not in accordance with the requirements of the Contract Documents, the Owner may do so instead of requiring its removal and correction, in which case the Contract Sum will be reduced as by an equitable amount which reflects the loss of value to the Owner caused by the non-conforming Work. Such adjustment shall be effected whether or not final payment has been made, and if the unpaid balance of the Contract Sum is insufficient to compensate the Owner, the Contractor shall immediately pay the Owner the difference. The Owner's acceptance of non-conforming work will only be effective if provided in writing.

§12.4 DAMAGE

§ 12.4.1 If prior to the date of Final Completion any member of the Construction Team uses or damages any portion of the Work or other property, including, without limitation, mechanical, electrical, plumbing and other building systems, machinery, equipment or other mechanical device, the Contractor shall cause such item to be restored to "like new" condition at no expense to the Owner, without recovery from the Owner, under the Contract Sum or

AIA Document A201 – 2017. Copyright © 1911, 1915, 1918, 1925, 1937, 1951, 1958, 1961, 1963, 1966, 1970, 1976, 1987, 1997, 2007 and 2017. All rights reserved. "The American Institute of Architects," "American Institute of Architects," "AIA," the AIA Logo, and "AIA Contract Documents" are trademarks of The American Institute of Architects. This draft was produced at 12:48:57 ET on 03/03/2025 under Order No.3104239075 which expires on 06/30/2025, is not for resale, is licensed for one-time use only, and may only be used in accordance with the AIA Contract Documents® Terms of Service. To report copyright violations, e-mail docinfo@aiacontracts.com.
User Notes: (793080888)

Guaranteed Maximum Price, any contingency or otherwise.

§ 12.4.2 The Contractor shall promptly repair, replace, or restore, and shall bear all such costs, of destroyed or damaged portions of the Work or the work of separate contractors, whether completed or partially completed, or any other property, whether or not owned by the Owner, that is caused by any member of the Construction Team.

§ 12.4.3 Nothing in this Section 12.4 limits the parties' rights to obtain recovery from any available property insurance.

ARTICLE 13 MISCELLANEOUS PROVISIONS

§ 13.1 Governing Law

The Contract shall be governed by the law of the place where the Project is located, excluding that jurisdiction's choice of law rules. If the Owner has selected arbitration as the method of binding dispute resolution, the Federal Arbitration Act shall govern Section 15.4.

§ 13.2 Successors and Assigns

§ 13.2.1 The Owner and Contractor respectively bind themselves, their partners, successors, assigns, and legal representatives to covenants, agreements, and obligations contained in the Contract Documents. Except as provided in Section 13.2.2, neither party to the Contract shall assign the Contract as a whole without written consent of the other. If either party attempts to make an assignment without such consent, the attempted assignment shall be void and that party shall nevertheless remain legally responsible for all obligations under the Contract.

§ 13.2.2 The Owner may, without consent of the Contractor, assign the Contract to Owner's parents, subsidiaries, successors, affiliates or, lender providing construction financing for the Project, if the lender assumes the Owner's rights and obligations under the Contract Documents. The Contractor shall execute all consents reasonably required to facilitate the assignment.

§ 13.2.3 The Contractor shall not assign the whole or any part of the Agreement, or any monies due or to become due, without the express written consent of the Owner. If the Contractor, with the Owner's consent, assigns all or any part of the Agreement or any monies due or to become due, the instrument of assignment shall contain a clause satisfactory to the Owner and stating that it is agreed that the right of the assignee in and to any monies due or to become due to the Contractor shall be subject to the prior claims of all persons, firms and corporations for services rendered or materials supplied for the performance of the Work called for in the Agreement.

§ 13.3 Rights and Remedies

§ 13.3.1 Duties and obligations imposed by the Contract Documents and rights and remedies available thereunder shall be in addition to and not a limitation of duties, obligations, rights, and remedies otherwise imposed or available by law.

§ 13.3.2 No action or failure to act by the Owner, Architect, or Contractor shall constitute a waiver of a right or duty afforded them under the Contract, nor shall such action or failure to act constitute approval of or acquiescence in a breach thereunder, except as may be specifically agreed upon in writing.

§ 13.4 Tests and Inspections

§ 13.4.1 Tests, inspections, and approvals of portions of the Work shall be made as required by the Contract Documents and by applicable laws, statutes, ordinances, codes, rules, and regulations or lawful orders of public authorities. Unless otherwise provided, the Contractor shall make arrangements for such tests, inspections, and approvals with an independent testing laboratory or entity acceptable to the Owner, or with the appropriate public authority, and shall bear all related costs of tests, inspections, and approvals. The Contractor shall give the Owner and Architect timely notice of when and where tests and inspections are to be made so that the Owner and Architect may be present for such procedures. The Owner shall bear costs of tests, inspections, or approvals that do not become requirements until after bids are received or negotiations concluded. The Owner shall directly arrange and pay for tests, inspections, or approvals where building codes or applicable laws or regulations so require.

§ 13.4.2 If the Architect, Owner, or public authorities having jurisdiction determine that portions of the Work require additional testing, inspection, or approval not included under Section 13.4.1, the Architect will, upon written authorization from the Owner, instruct the Contractor to make arrangements for such additional testing, inspection,

AIA Document A201 – 2017. Copyright © 1911, 1915, 1918, 1925, 1937, 1951, 1958, 1961, 1963, 1966, 1970, 1976, 1987, 1997, 2007 and 2017. All rights reserved. "The American Institute of Architects," "American Institute of Architects," "AIA," the AIA Logo, and "AIA Contract Documents" are trademarks of The American Institute of Architects. This draft was produced at 12:48:57 ET on 03/03/2025 under Order No.3104239075 which expires on 06/30/2025, is not for resale, is licensed for one-time use only, and may only be used in accordance with the AIA Contract Documents® Terms of Service. To report copyright violations, e-mail docinfo@aiacontracts.com.
User Notes: (793080888)

or approval, by an entity acceptable to the Owner, and the Contractor shall give timely notice to the Architect of when and where tests and inspections are to be made so that the Architect may be present for such procedures. Such costs, except as provided in Section 13.4.3, shall be at the Owner's expense.

§ 13.4.3 If procedures for testing, inspection, or approval under Sections 13.4.1 and 13.4.2 reveal failure of the portions of the Work to comply with requirements established by the Contract Documents, all costs made necessary by such failure, including those of repeated procedures and compensation for the Architect's services and expenses, shall be at the Contractor's expense without increase in the Contract Sum and without use of any contingency.

§ 13.4.4 Required certificates of testing, inspection, or approval shall, unless otherwise required by the Contract Documents, be secured by the Contractor and promptly delivered to the Architect.

§ 13.4.5 If the Architect is to observe tests, inspections, or approvals required by the Contract Documents, the Architect will do so promptly and, where practicable, at the normal place of testing.

§ 13.4.6 Tests or inspections conducted pursuant to the Contract Documents shall be made promptly to avoid unreasonable delay in the Work.

§ 13.5 Interest

Payments due and unpaid under the Contract Documents shall bear interest from the date payment is due at the rate the parties agree upon in writing.

ARTICLE 14 TERMINATION OR SUSPENSION OF THE CONTRACT

§ 14.1 Termination by the Contractor

§ 14.1.1 The Contractor may terminate the Contract if the Work is stopped through no act or fault of the Contractor or a member of the Construction Team for any of the following reasons:

- **.1** for a period of 180 consecutive days by an order of a court or other public authority having jurisdiction that requires all Work to be stopped;
- **.2** for a period of 180 consecutive days by an act of government, such as a declaration of national emergency;
- **.3** for a period of 90 consecutive days pursuant to Section 9.7;
- **.4** for a period of 90 consecutive days because the Owner has failed to furnish to the Contractor reasonable evidence as required by Section 2.2; or
- **.5** for a period of 120 consecutive days for a suspension of the Work under Section 14.3 provided the circumstances described by Section 14.3.2.1 do not apply.

§ 14.1.2 Prior to terminating the Contract under Section 14.1.1, the Contractor shall give the Owner seven days' notice of its intention to terminate, and if the grounds for termination remain uncured, may proceed with termination of the Contract.

§ 14.1.3 Upon termination by the Contractor, the Owner will pay to the Contractor for Work properly executed; costs incurred by reason of the termination, including costs attributable to termination of Subcontracts. This payment is the Contractor's sole and exclusive remedy to for termination under Section 14.1.

§ 14.2 Termination by the Owner for Cause

§ 14.2.1 The Owner may terminate the Contract if the Contractor

- **.1** refuses or fails to supply enough properly skilled workers or proper materials;
- **.2** fails to make payment to Subcontractors or suppliers in accordance with the respective agreements between the Contractor and the Subcontractors or suppliers;
- **.3** disregards applicable laws, statutes, ordinances, codes, rules and regulations, or lawful orders of a public authority;
- **.4** fails to provide adequate assurances of its ability to complete the Work for the Contract Sum and within the Contract Time after substantiated concerns about its ability to do so have been delivered in writing by the Owner; or
- **.5** otherwise is guilty of a breach of a provision of the Contract Documents.

AIA Document A201 – 2017. Copyright © 1911, 1915, 1918, 1925, 1937, 1951, 1958, 1961, 1963, 1966, 1970, 1976, 1987, 1997, 2007 and 2017. All rights reserved. "The American Institute of Architects," "American Institute of Architects," "AIA," the AIA Logo, and "AIA Contract Documents" are trademarks of The American Institute of Architects. This draft was produced at 12:48:57 ET on 03/03/2025 under Order No.3104239075 which expires on 06/30/2025, is not for resale, is licensed for one-time use only, and may only be used in accordance with the AIA Contract Documents® Terms of Service. To report copyright violations, e-mail docinfo@aiacontracts.com.
User Notes: (793080888)

§ 14.2.2 When any of the reasons described in Section 14.2.1 exist, the Owner may, without prejudice to any other rights or remedies of the Owner and after giving the Contractor and the Contractor's surety, if any, seven days' notice, terminate employment of the Contractor and may, subject to any prior rights of the surety:

- **.1** Exclude the Contractor from the site and take possession of all materials, equipment, tools, and construction equipment and machinery thereon owned by the Contractor;
- **.2** Accept assignment of subcontracts pursuant to Section 5.4; and
- **.3** Finish the Work by whatever reasonable method the Owner may deem expedient. Upon written request of the Contractor, the Owner shall furnish to the Contractor a detailed accounting of the costs incurred by the Owner in finishing the Work.

§ 14.2.3 When the Owner terminates the Contract for one of the reasons stated in Section 14.2.1, the Contractor shall not be entitled to receive further payment until the Work is finished and the balance due the parties under Section 14.2.5 has been determined.

§ 14.2.4 Upon termination under this Section 14.2, the Contractor shall deliver all Record Documents to the Owner. If requested by the Owner, the Contractor shall remove its equipment, machinery, and supplies from the Project site within seven days. The Owner may remove or store such equipment, machinery, and supplies at the Contractor's expense in the event the Contractor fails to do so.

§ 14.2.5 If the unpaid balance of the Contract Sum exceeds costs of finishing the Work, including compensation for the Architect's services and expenses made necessary thereby, and other damages incurred by the Owner and not expressly waived, such excess shall be paid to the Contractor. If such costs and damages exceed the unpaid balance, the Contractor shall pay the difference to the Owner.

§ 14.2.6 If the Owner's termination of the Contractor under Section 14.2 is subsequently deemed wrongful, the termination shall be deemed one for convenience under Section 14.4.

§ 14.3 Suspension by the Owner for Convenience

§ 14.3.1 The Owner may, for any reason, order the Contractor in writing to suspend, delay or interrupt the Work, in whole or in part for such period of time as the Owner may determine.

§ 14.3.2 The Contract Sum and Contract Time shall be adjusted for actual and demonstrated increases in the cost and time caused by suspension, delay, or interruption under Section 14.3.1. No adjustment shall be made to the extent

- **.1** that performance is, was, or would have been concurrently or independently suspended, delayed, or interrupted, by another cause for which a member of the Construction Team is responsible; or
- **.2** that an equitable adjustment for any particular item is made or denied under another provision of the Contract.

§ 14.3.3 In the case of a termination of the Agreement by the Contractor pursuant to Section 14.1, the Contractor's Fee through the date of termination shall be calculated as if the termination were by the Owner for convenience pursuant to Section 14.4.

§ 14.3.4 Except as provided in Section 14.1, the increase in the Contract Sum and Contract Time provided by Section 14.3.2 is the Contractor's exclusive remedy for the Owner's suspension of the Work.

§ 14.4 Termination by the Owner for Convenience

§ 14.4.1 The Owner may, at any time, terminate the Contract for the Owner's convenience and without cause. Termination by the Owner under this Section shall be by a notice of termination delivered to the Contractor specifying the extent of termination and the effective date.

§ 14.4.2 Upon receipt of notice from the Owner of such termination for the Owner's convenience, the Contractor shall

- **.1** cease operations as directed by the Owner in the notice;
- **.2** take actions necessary, or that the Owner may direct, for the protection and preservation of the Work;
- **.3** except for Work directed to be performed prior to the effective date of termination stated in the notice, terminate all existing subcontracts and purchase orders and enter into no further subcontracts and purchase orders; and

AIA Document A201 – 2017. Copyright © 1911, 1915, 1918, 1925, 1937, 1951, 1958, 1961, 1963, 1966, 1970, 1976, 1987, 1997, 2007 and 2017. All rights reserved. "The American Institute of Architects," "American Institute of Architects," "AIA," the AIA Logo, and "AIA Contract Documents" are trademarks of The American Institute of Architects. This draft was produced at 12:48:57 ET on 03/03/2025 under Order No.3104239075 which expires on 06/30/2025, is not for resale, is licensed for one-time use only, and may only be used in accordance with the AIA Contract Documents® Terms of Service. To report copyright violations, e-mail docinfo@aiacontracts.com.
User Notes: (793080888)

.4 turn over all Record Documents.

§ 14.4.3 In case of such termination for the Owner's convenience, the Owner shall pay the Contractor for Work properly executed; costs incurred by reason of the termination, including costs attributable to termination of Subcontracts.

ARTICLE 15 CLAIMS AND DISPUTES

§ 15.1 Claims

§ 15.1.1 Definition

A Claim is a demand or assertion by one of the parties seeking, as a matter of right, payment of money, a change in the Contract Time, or other relief with respect to the terms of the Contract. The term "Claim" also includes other disputes and matters in question between the Owner and Contractor arising out of or relating to the Contract. The responsibility to substantiate Claims shall rest with the party making the Claim. This Section 15.1.1 does not require the Owner to file a Claim in order to impose liquidated damages in accordance with the Contract Documents.

§ 15.1.2 Time Limits on Claims

The Owner and Contractor shall commence all Claims and causes of action against the other and arising out of or related to the Contract, whether in contract, tort, breach of warranty or otherwise, in accordance with the requirements of the binding dispute resolution method selected in the Agreement and within the period specified by Applicable Law, but in any case not more than 10 years after the date of Substantial Completion of the Work. The Owner and Contractor waive all Claims and causes of action not commenced in accordance with this Section 15.1.2.

§ 15.1.3 Notice of Claims

§ 15.1.3.1 Claims by either the Owner or Contractor, where the condition giving rise to the Claim is first discovered prior to Final Completion of the Work, shall be initiated by written notice to the other party and to the Initial Decision Maker with a copy sent to the Architect, if the Architect is not serving as the Initial Decision Maker. Unless an applicable provision in the Contract Documents sets a different deadline, Claims by either party under this Section 15.1.3.1 shall be initiated within 14 days after occurrence of the event giving rise to such Claim or within 14 days after the claimant first recognizes the condition giving rise to the Claim, whichever is later.

§ 15.1.3.2 Claims by either the Owner or Contractor, where the condition giving rise to the Claim is first discovered after Final Completion of the Work, shall be initiated by notice to the other party. In such event, no decision by the Initial Decision Maker is required.

§ 15.1.3.3 The notice of Claim shall describe the facts and circumstances giving rise to it, the effect on the Work, a proposed solution to the Claim, the requested relief, and the basis under the Contract for the requested relief. In the event the party asserting the Claim subsequently discovers additional information relevant to the Claim it shall supplement its notice by providing it to the other party.

§ 15.1.3.4 The Contractor's failure to follow the notice provisions of this Section 15.1.3 operate as a waiver of its right to an increase in the Contract Sum and Contract Time.

§ 15.1.4 Continuing Contract Performance

§ 15.1.4.1 Pending final resolution of a Claim, except as otherwise agreed in writing or as provided in Section 9.7 and Article 14, the Contractor shall proceed diligently with performance of the Contract and the Owner shall continue to make payments in accordance with the Contract Documents.

§ 15.1.4.2 The Contract Sum and Contract Time shall be adjusted in accordance with the Initial Decision Maker's decision, subject to the right of either party to proceed in accordance with this Article 15. The Architect will issue Certificates for Payment in accordance with the decision of the Initial Decision Maker.

§ 15.1.5 Claims for Additional Cost

With all Claims for an increase in the Contract Sum that are not subject to Section 7.3, the Contractor shall give notice in the manner provided in Section 15.1.3 before executing the portion of the Work that is the subject of the Claim, before incurring a cost for which the Owner may become liable, and before taking any action that hinders the Owner's investigation of the Claim . Prior notice is not required for Claims relating to an emergency endangering life or property arising under Section 10.4.

AIA Document A201 – 2017. Copyright © 1911, 1915, 1918, 1925, 1937, 1951, 1958, 1961, 1963, 1966, 1970, 1976, 1987, 1997, 2007 and 2017. All rights reserved. "The American Institute of Architects," "American Institute of Architects," "AIA," the AIA Logo, and "AIA Contract Documents" are trademarks of The American Institute of Architects. This draft was produced at 12:48:57 ET on 03/03/2025 under Order No.3104239075 which expires on 06/30/2025, is not for resale, is licensed for one-time use only, and may only be used in accordance with the AIA Contract Documents® Terms of Service. To report copyright violations, e-mail docinfo@aiacontracts.com.
User Notes: (793080888)

§ 15.1.6 Claims for Additional Time

§ 15.1.6.1 If the Contractor wishes to make a Claim for an increase in the Contract Time, notice in the manner provided in Section 15.1.3 shall be given. The Contractor's Claim shall include an estimate of cost and of probable effect of delay on progress of the Work. In the case of a continuing delay, only one Claim is necessary.

§ 15.1.6.2 If adverse weather conditions are the basis for a Claim for additional time, such Claim shall be documented by data substantiating that weather conditions were abnormal for the period of time, could not have been reasonably anticipated, and had an adverse effect on the scheduled construction.

§ 15.1.7 Waiver of Claims for Consequential Damages

The Contractor and Owner waive Claims against each other for consequential damages arising out of or relating to this Contract. This mutual waiver includes

- **.1** damages incurred by the Owner for rental expenses, for losses of use, income, profit, financing, business and reputation, and for loss of management or employee productivity or of the services of such persons; and
- **.2** damages incurred by the Contractor for principal office expenses including the compensation of personnel stationed there, for losses of financing, business and reputation, and for loss of profit, except anticipated profit arising directly from the Work.

This mutual waiver is applicable, without limitation, to all consequential damages due to either party's termination in accordance with Article 14. Nothing contained in this Section 15.1.7 shall be deemed to preclude assessment of liquidated damages, when applicable, in accordance with the requirements of the Contract Documents.

§ 15.2 Initial Decision

§ 15.2.1 Claims, excluding those where the condition giving rise to the Claim is first discovered after expiration of the period for correction of the Work set forth in Section 12.2.2 or arising under Sections 10.3, 10.4, and 11.5, shall be referred to the Initial Decision Maker for initial decision. The Architect will serve as the Initial Decision Maker, unless otherwise indicated in the Agreement. Except for those Claims excluded by this Section 15.2.1, an initial decision shall be required as a condition precedent to mediation of any Claim. If an initial decision has not been rendered within 30 days after the Claim has been referred to the Initial Decision Maker, the party asserting the Claim may demand mediation and binding dispute resolution without a decision having been rendered. Unless the Initial Decision Maker and all affected parties agree, the Initial Decision Maker will not decide disputes between the Contractor and persons or entities other than the Owner.

§ 15.2.2 The Initial Decision Maker will review Claims and within ten days of the receipt of a Claim take one or more of the following actions: (1) request additional supporting data from the claimant or a response with supporting data from the other party, (2) reject the Claim in whole or in part, (3) approve the Claim, (4) suggest a compromise, or (5) advise the parties that the Initial Decision Maker is unable to resolve the Claim if the Initial Decision Maker lacks sufficient information to evaluate the merits of the Claim or if the Initial Decision Maker concludes that, in the Initial Decision Maker's sole discretion, it would be inappropriate for the Initial Decision Maker to resolve the Claim.

§ 15.2.3 In evaluating Claims, the Initial Decision Maker may, but shall not be obligated to, consult with or seek information from either party or from persons with special knowledge or expertise who may assist the Initial Decision Maker in rendering a decision. The Initial Decision Maker may request the Owner to authorize retention of such persons at the Owner's expense.

§ 15.2.4 If the Initial Decision Maker requests a party to provide a response to a Claim or to furnish additional supporting data, such party shall respond, within ten days after receipt of the request, and shall either (1) provide a response on the requested supporting data, (2) advise the Initial Decision Maker when the response or supporting data will be furnished, or (3) advise the Initial Decision Maker that no supporting data will be furnished. Upon receipt of the response or supporting data, if any, the Initial Decision Maker will either reject or approve the Claim in whole or in part.

§ 15.2.5 The Initial Decision Maker will render an initial decision approving or rejecting the Claim, or indicating that the Initial Decision Maker is unable to resolve the Claim. This initial decision shall (1) be in writing; (2) state the

AIA Document A201 – 2017. Copyright © 1911, 1915, 1918, 1925, 1937, 1951, 1958, 1961, 1963, 1966, 1970, 1976, 1987, 1997, 2007 and 2017. All rights reserved. "The American Institute of Architects," "American Institute of Architects," "AIA," the AIA Logo, and "AIA Contract Documents" are trademarks of The American Institute of Architects. This draft was produced at 12:48:57 ET on 03/03/2025 under Order No.3104239075 which expires on 06/30/2025, is not for resale, is licensed for one-time use only, and may only be used in accordance with the AIA Contract Documents® Terms of Service. To report copyright violations, e-mail docinfo@aiacontracts.com.
User Notes: (793080888)

reasons therefor; and (3) notify the parties and the Architect, if the Architect is not serving as the Initial Decision Maker, of any change in the Contract Sum or Contract Time or both. The initial decision shall be final and binding on the parties but subject to mediation and, if the parties fail to resolve their dispute through mediation, to binding dispute resolution.

§ 15.2.6 Either party may file for mediation of an initial decision at any time, subject to the terms of Section 15.2.6.1.

§ 15.2.6.1 Either party may, within 30 days from the date of receipt of an initial decision, demand in writing that the other party participate in mediation.

§ 15.2.7 In the event of a Claim against the Contractor, the Owner may, but is not obligated to, notify the surety, if any, of the nature and amount of the Claim. If the Claim relates to a possibility of a Contractor's default, the Owner may, but is not obligated to, notify the surety and request the surety's assistance in resolving the controversy.

§ 15.2.8 If a Claim relates to or is the subject of a mechanic's lien, the party asserting such Claim may proceed in accordance with applicable law to comply with the lien notice or filing deadlines.

§ 15.3 Mediation

§ 15.3.1 As a precondition to mediation, the Owner and Contractor agree that they shall first submit any and all unsettled claims, counterclaims, disputes and other matters in question between them arising out of or relating to this Agreement or the breach thereof ("disputes"), to resolution by the Senior Officers of the Owner and Contractor prior to either of them initiating against the other a demand for mediation, unless delay in initiating mediation or arbitration would irrevocably prejudice one of the parties. The term "Senior Officer" shall mean with respect to the Owner and Contractor, the respective party's chief executive officer, president, managing partner, partner, chief financial officer, chief operating officer, or other individual with authority to resolve the matter and bind the party. If the Senior Officers fails to resolve the Disputes, the Contractor and Owner may mutually agree, in writing, to submit any dispute or claim arising out of this Agreement to mediation.

§ 15.3.2 Claims, disputes, or other matters in controversy arising out of or related to the Contract, except those waived as provided for in Sections 9.10.4, 9.10.5, and 15.1.7, shall be subject to mediation as a condition precedent to binding dispute resolution.

§ 15.3.3 The parties shall endeavor to resolve their Claims by mediation which, unless the parties mutually agree otherwise, may be administered by the American Arbitration Association in accordance with its Construction Industry Mediation Procedures in effect on the date of the Agreement if the parties so agree. A request for mediation shall be made in writing, delivered to the other party to the Contract, and may be filed with the person or entity administering the mediation. The request may be made concurrently with the filing of binding dispute resolution proceedings but, in such event, mediation shall proceed in advance of binding dispute resolution proceedings, which shall be stayed pending mediation for a period of 60 days from the date of filing, unless stayed for a longer period by agreement of the parties or court order. If an arbitration is stayed pursuant to this Section 15.3.2, the parties may nonetheless proceed to the selection of the arbitrator(s) and agree upon a schedule for later proceedings.

§ 15.3.4 Either party may, within 30 days from the date that mediation has been concluded without resolution of the dispute or 60 days after mediation has been demanded without resolution of the dispute, demand in writing that the other party file for binding dispute resolution.

§ 15.3.5 The Contractor shall participate in mediation with persons or entities the Owner deems necessary for resolution of the dispute.

§ 15.3.6 All participants in the mediation shall share the mediator's fee and any filing fees equally. The mediation shall be held in the place where the Project is located, unless another location is mutually agreed upon. Agreements reached in mediation shall be enforceable as settlement agreements in any court having jurisdiction thereof.

§ 15.4 Arbitration

§ 15.4.1 If the parties have selected arbitration as the method for binding dispute resolution in the Agreement, any Claim subject to, but not resolved by, mediation shall be subject to arbitration which, unless the parties mutually agree otherwise, shall be administered by the American Arbitration Association in accordance with its Construction

AIA Document A201 – 2017. Copyright © 1911, 1915, 1918, 1925, 1937, 1951, 1958, 1961, 1963, 1966, 1970, 1976, 1987, 1997, 2007 and 2017. All rights reserved. "The American Institute of Architects," "American Institute of Architects," "AIA," the AIA Logo, and "AIA Contract Documents" are trademarks of The American Institute of Architects. This draft was produced at 12:48:57 ET on 03/03/2025 under Order No.3104239075 which expires on 06/30/2025, is not for resale, is licensed for one-time use only, and may only be used in accordance with the AIA Contract Documents® Terms of Service. To report copyright violations, e-mail docinfo@aiacontracts.com.
User Notes: (793080888)

Industry Arbitration Rules in effect on the date of the Agreement. The Arbitration shall be conducted in the place where the Project is located, unless another location is mutually agreed upon. A demand for arbitration shall be made in writing, delivered to the other party to the Contract, and filed with the person or entity administering the arbitration. The party filing a notice of demand for arbitration must assert in the demand all Claims then known to that party on which arbitration is permitted to be demanded.

§ 15.4.1.1 A demand for arbitration shall be made no earlier than concurrently with the filing of a request for mediation, but in no event shall it be made after the date when the institution of legal or equitable proceedings based on the Claim would be barred by the applicable statute of limitations. For statute of limitations purposes, receipt of a written demand for arbitration by the person or entity administering the arbitration shall constitute the institution of legal or equitable proceedings based on the Claim.

§ 15.4.2 The award rendered by the arbitrator or arbitrators shall be final, and judgment may be entered upon it in accordance with applicable law in any court having jurisdiction thereof.

§ 15.4.3 The foregoing agreement to arbitrate and other agreements to arbitrate with an additional person or entity duly consented to by parties to the Agreement, shall be specifically enforceable under applicable law in any court having jurisdiction thereof.

§ 15.4.4 Consolidation or Joinder

§ 15.4.4.1 Subject to the rules of the American Arbitration Association or other applicable arbitration rules, either party may consolidate an arbitration conducted under this Agreement with any other arbitration to which it is a party provided that (1) the arbitration agreement governing the other arbitration permits consolidation, (2) the arbitrations to be consolidated substantially involve common questions of law or fact, and (3) the arbitrations employ materially similar procedural rules and methods for selecting arbitrator(s).

§ 15.4.4.2 Subject to the rules of the American Arbitration Association or other applicable arbitration rules, either party may include by joinder persons or entities substantially involved in a common question of law or fact whose presence is required if complete relief is to be accorded in arbitration, provided that the party sought to be joined consents in writing to such joinder. Consent to arbitration involving an additional person or entity shall not constitute consent to arbitration of any claim, dispute or other matter in question not described in the written consent.

[signatures on following page]

AIA Document A201 – 2017. Copyright © 1911, 1915, 1918, 1925, 1937, 1951, 1958, 1961, 1963, 1966, 1970, 1976, 1987, 1997, 2007 and 2017. All rights reserved. "The American Institute of Architects," "American Institute of Architects," "AIA," the AIA Logo, and "AIA Contract Documents" are trademarks of The American Institute of Architects. This draft was produced at 12:48:57 ET on 03/03/2025 under Order No.3104239075 which expires on 06/30/2025, is not for resale, is licensed for one-time use only, and may only be used in accordance with the AIA Contract Documents® Terms of Service. To report copyright violations, e-mail docinfo@aiacontracts.com.
User Notes: (793080888)

CITY OF LIVONIA,

OWNER
(Signature)

«Maureen Miller Brosnan, Mayor »
(Printed name and title)

(date)

OWNER
(Signature)

«Lori Miller, City Clerk »« »
(Printed name and title)

(date)

and

OWNER
(Signature)

«Carter Fisher, City Attorney »« »
(Printed name and title)

(date)

Reviewed and acknowledged by:

HOBBS + BLACK ASSOCIATES, INC.,

ARCHITECT *(Signature)*
Martin Ruiter, AIA, LEED AP
Vice President - Principal in Charge »
(Printed name and title)

(date)

GRANGER CONSTRUCTION COMPANY,

CONSTRUCTION MANAGER
(Signature)

«Dennis Carignan, President»« »
(Printed name and title)

(date)

DRAFT

AIA Document A201 – 2017. Copyright © 1911, 1915, 1918, 1925, 1937, 1951, 1958, 1961, 1963, 1966, 1970, 1976, 1987, 1997, 2007 and 2017. All rights reserved. "The American Institute of Architects," "American Institute of Architects," "AIA," the AIA Logo, and "AIA Contract Documents" are trademarks of The American Institute of Architects. This draft was produced at 12:48:57 ET on 03/03/2025 under Order No.3104239075 which expires on 06/30/2025, is not for resale, is licensed for one-time use only, and may only be used in accordance with the AIA Contract Documents® Terms of Service. To report copyright violations, e-mail docinfo@aiacontracts.com.
User Notes: (793080888)

DRAFT AIA® Document A133® – 2019 Exhibit A

Guaranteed Maximum Price Amendment

This First Guaranteed Maximum Price Amendment dated the « » day of « » in the year «Two Thousand Twenty ___» (the "First GMP Amendment") , is incorporated into the accompanying AIA Document A133™–2019, Standard Form of Agreement Between Owner and Construction Manager as Constructor where the basis of payment is the Cost of the Work Plus a Fee with a Guaranteed Maximum Price ("GMP") dated the «Twenty Ninth» day of «April» in the year «Two Thousand Twenty Five» (the "Agreement").
(In words, indicate day, month, and year.)

for the following **PROJECT:**
(Name and address or location)

Livonia City Center Program
«New Police Station Facility»

THE OWNER:
(Name, legal status, and address)

City of Livonia
33000 Civic Center Drive
Livonia, Michigan 48154

THE CONSTRUCTION MANAGER:
(Name, legal status, and address)

«Granger Construction Company »« »
6267 Aurelius Rd.
Lansing, Michigan 48911 »
«(517) 393-1670 »

THE ARCHITECT:
(Name, legal status, and address)

«Hobbs + Black Associates, Inc. »« »
«100 N State Street
Ann Arbor, Michigan 48104 »
«(734) 663-4189 »

TABLE OF ARTICLES

A.1 GUARANTEED MAXIMUM PRICE

A.2 DATE OF COMMENCEMENT AND SUBSTANTIAL COMPLETION

A.3 INFORMATION UPON WHICH AMENDMENT IS BASED

A.4 CONSTRUCTION MANAGER'S CONSULTANTS, CONTRACTORS, DESIGN PROFESSIONALS, AND SUPPLIERS

A.5 THIS AMENDMENT

ADDITIONS AND DELETIONS: The author of this document has added information needed for its completion. The author may also have revised the text of the original AIA standard form. An *Additions and Deletions Report* that notes added information as well as revisions to the standard form text is available from the author and should be reviewed.

This document has important legal consequences. Consultation with an attorney is encouraged with respect to its completion or modification.

AIA Document A201™–2017, General Conditions of the Contract for Construction, is adopted in this document by reference. Do not use with other general conditions unless this document is modified.

ELECTRONIC COPYING of any portion of this AIA® Document to another electronic file is prohibited and constitutes a violation of copyright laws as set forth in the footer of this document.

AIA Document A133 – 2019 Exhibit A. Copyright © 1991, 2003, 2009, and 2019. All rights reserved. "The American Institute of Architects," "American Institute of Architects," "AIA," the AIA Logo, and "AIA Contract Documents" are trademarks of The American Institute of Architects. This draft was produced at 12:01:06 ET on 02/11/2025 under Order No.3104239075 which expires on 03/16/2025, is not for resale, is licensed for one-time use only, and may only be used in accordance with the AIA Contract Documents® Terms of Service. To report copyright violations, e-mail docinfo@aiacontracts.com.
User Notes: (1916290921)

ARTICLE A.1 GUARANTEED MAXIMUM PRICE

§ A.1.1 Guaranteed Maximum Price

Pursuant to Section 3.3.6 of the Agreement, the Owner and Construction Manager hereby amend the Agreement to establish a Guaranteed Maximum Price. As agreed by the Owner and Construction Manager, the Guaranteed Maximum Price is an amount that the Contract Sum shall not exceed. The Contract Sum consists of the Construction Manager's Fee plus the Cost of the Work, as those terms are defined in Articles 6 and 7 of the Agreement respectively.

§ A.1.1.1 The Contract Sum is guaranteed by the Construction Manager not to exceed « » ($ « »), subject to additions and deductions by Change Order as provided in the Contract Documents. The total Compensation under this Agreement, including the Construction Manager's compensation for its Preconstruction Services, shall not exceed « » ($ « »).

§ A.1.1.2 Itemized Statement of the Guaranteed Maximum Price. Provided below is an itemized statement of the total compensation authorized under the Agreement and the Guaranteed Line Items comprising the Guaranteed Maximum Price. A detailed breakdown of the Guaranteed Maximum Price organized by trade categories, including allowances; the Construction Manager's contingency; alternates; the Construction Manager's Fee; and other items that comprise the Guaranteed Maximum Price as defined in Section 3.3.1 and 6.2 of the Agreement is provided in Attachment A to this Amendment.

1. Preconstruction Phase Services Compensation			
a. Total compensation authorized for Preconstruction Services [1]:	**Hourly Not-To-Exceed**		**$ 78,312**
2. Construction Phase Services Compensation			
a. The Guaranteed Maximum Price of the Contract Sum is:	**Not-To-Exceed**		
The Guaranteed Maximum Price for the Contract Sum is comprised of the Cost of the Work and the Construction Manager's Fee as follows:			
i. Cost of Work[2]:			
A. 'Hard Costs' (as set forth in §6.2.1.3 of the Agreement)[3]			$ -
1. Trade Contractors	Not-To-Exceed		
2. General Conditions	Not-To-Exceed		
B. 'CM Direct Costs' (as set forth in §6.2.1.1 of the Agreement)[3]	Not-To-Exceed		
1. CM Reimbursbles			$ -
2. General Liability Insurance	0.78%	of the Cost of the Work	$ -
3. Builders Risk Insurance	0.25%	of the Cost of the Work	$ -
4. 100% PLM Bonds	0.88%	of the Cost of the Work	$ -
C. 'Personnel Costs' (as set forth in §6.2.1.2 of the Agreement)[3]	Not-To-Exceed		$ 819,312
D. Construction Manager's Contingency	0.00%	of the rest of the Cost the Work	$ -
ii. Construction Manager's Fee	2.10%	of the Cost of the Work	
3. Total Possible Compensation Authorized			
a. Total possible compensation authorized By the Agreement is:	**(Contract Sum GMP + Precon)**		
4. Notes			
[1] The value shown is inclusive of any and all costs for the Construction Manager's Preconstruction Services whether previously authorized or authorized under this			
[2] The values shown are inclusive of any and all costs for the Work as set forth in the Contract Documents whether previously authorized or authorized under this A			
[3] The value shown is a Guaranteed Line Item as set forth in §6.2 of the Agreement.			

§ A.1.1.3 Not Used

§ A.1.1.4 The method of adjustment of the Construction Manager's Fee for changes in the Work is set forth in Section 6.1.3 of the Agreement.

§ A.1.1.5 Alternates

§ A.1.1.5.1 Alternates, if any, included in the Guaranteed Maximum Price and accepted by the Owner are enumerated in Attachment A to this Amendment and described in the Contract Documents:

AIA Document A133 – 2019 Exhibit A. Copyright © 1991, 2003, 2009, and 2019. All rights reserved. "The American Institute of Architects," "American Institute of Architects," "AIA," the AIA Logo, and "AIA Contract Documents" are trademarks of The American Institute of Architects. This draft was produced at 12:01:06 ET on 02/11/2025 under Order No.3104239075 which expires on 03/16/2025, is not for resale, is licensed for one-time use only, and may only be used in accordance with the AIA Contract Documents® Terms of Service. To report copyright violations, e-mail docinfo@aiacontracts.com.
User Notes: (1916290921)

§ A.1.1.5.2 The Guaranteed Maximum Price does not include the alternates enumerated in Attachment B to this Amendment, which are described in the Contract Documents and may be accepted by the Owner in writing.
Unless otherwise specified in the Conditions for Acceptance, the Contractor may, with no less than fourteen (14) days' prior written notice, establish in writing a date upon which any of these alternates must be accepted by the Owner in order for the Contractor to perform the Work covered by such alternates for the price set forth Attachment B and without any adjustment to the Contract Time.

§ A.1.1.6 Unit prices, if any, included in the Guaranteed Maximum Price and accepted by the Owner are enumerated in Attachment C to this Amendment.

ARTICLE A.2 DATE OF COMMENCEMENT AND SUBSTANTIAL COMPLETION

§ A.2.1 The date of commencement of the Work shall be:

[« »] The date of [execution] of this Amendment.

[« »] Established as follows:
(Insert a date or a means to determine the date of commencement of the Work.)

[ ] Work shall commence on [Date]

[ ] Work commenced on [Date]

If a date of commencement of the Work is not selected, then the date of commencement shall be the date of execution of this Amendment.

§ A.2.2 Unless otherwise provided, the Contract Time is the period of time, including authorized adjustments, allotted in the Contract Documents for Substantial Completion of the Work. The Contract Time shall be measured from the date of commencement of the Work.

§ A.2.3 Substantial Completion

§ A.2.3.1 Subject to adjustments of the Contract Time as provided in the Contract Documents, the Construction Manager shall achieve Substantial Completion of the entire Work:

[« »] Not later than « » (« ») calendar days from the date of commencement of the Work.

[« »] By the following date: « »

§ A.2.3.2 Subject to adjustments of the Contract Time as provided in the Contract Documents, if portions of the Work are to be completed prior to Substantial Completion of the entire Work, the Construction Manager shall achieve Substantial Completion of such portions by the following dates:

Portion of Work	Substantial Completion Date

§ A.2.3.3 If the Construction Manager fails to achieve Substantial Completion as provided in this Section A.2.3, liquidated damages, if any, shall be assessed as set forth in Section 6.1.6 of the Agreement.

ARTICLE A.3 INFORMATION UPON WHICH AMENDMENT IS BASED

§ A.3.1 The Guaranteed Maximum Price and Contract Time set forth in this Amendment are based on the Contract Documents which includes the following:

§ A.3.1.1 The Supplementary and other Conditions of the Contract enumerated in Attachment D to this Amendment which are incorporated herein in full by reference.

§ A.3.1.2 The Specifications enumerated in Attachment E to this Amendment which are incorporated herein in full by reference.

AIA Document A133 – 2019 Exhibit A. Copyright © 1991, 2003, 2009, and 2019. All rights reserved. "The American Institute of Architects," "American Institute of Architects," "AIA," the AIA Logo, and "AIA Contract Documents" are trademarks of The American Institute of Architects. This draft was produced at 12:01:06 ET on 02/11/2025 under Order No.3104239075 which expires on 03/16/2025, is not for resale, is licensed for one-time use only, and may only be used in accordance with the AIA Contract Documents® Terms of Service. To report copyright violations, e-mail docinfo@aiacontracts.com.
User Notes: (1916290921)

§ A.3.1.3 The Drawings enumerated in Attachment F to this Amendment which are incorporated herein in full by reference.

§ A.3.1.4
Any and all fully signed Change Orders dated as of the Date of this GMP Amendment which are incorporated herein in full by reference.

§ A.3.1.5 Allowances, if any, included in the Guaranteed Maximum Price are as set forth in Attachment B to this Amendment.

§ A.3.1.6 Construction Change Directives and requests for change orders, if any, enumerated in Attachment G which are incorporated herein in full by reference.

§ A.3.1.7 Assumptions and clarifications, if any, upon which the Guaranteed Maximum Price is based are set forth in Attachment H to this Amendment.

ARTICLE A.4 CONSTRUCTION MANAGER'S CONSULTANTS, CONTRACTORS, DESIGN PROFESSIONALS, AND SUPPLIERS

§ A.4.1 The Construction Manager shall retain the consultants, contractors, design professionals, and suppliers, identified below, the cost of which are included in the Guaranteed Maximum Price:
«As set forth in Attachment A to this Amendment. »

ARTICLE A.5 THIS AMENDMENT

§ A.5.1 The following document form an integral part of this Amendment:

Attachment A – Detailed Schedule of Values of the Cost of the Work and Contract Sum
Attachment B – Optional Alternates
Attachment C – Unit Prices
Attachment D – Supplemental Conditions of the Contract
Attachment E – Specifications
Attachment F – Drawings
Attachment G – Construction Change Directives and Change Requests
Attachment H – Assumptions

§ A.5.2 This Amendment (including attachments listed above as supplements) together with the Contract constitutes the whole agreement between the parties with respect to the subject matter contained herein and there are no terms other than those contained herein.

[signatures on following page]

AIA Document A133 – 2019 Exhibit A. Copyright © 1991, 2003, 2009, and 2019. All rights reserved. "The American Institute of Architects," "American Institute of Architects," "AIA," the AIA Logo, and "AIA Contract Documents" are trademarks of The American Institute of Architects. This draft was produced at 12:01:06 ET on 02/11/2025 under Order No.3104239075 which expires on 03/16/2025, is not for resale, is licensed for one-time use only, and may only be used in accordance with the AIA Contract Documents® Terms of Service. To report copyright violations, e-mail docinfo@aiacontracts.com.
User Notes: (1916290921)

This Amendment to the Agreement entered into as of the day and year first written above.

CITY OF LIVONIA,

OWNER
(Signature)

«Maureen Miller Brosnan, Mayor »«
(Printed name and title)

(date)

GRANGER CONSTRUCTION COMPANY,

CONSTRUCTION MANAGER
(Signature)

«Dennis Carignan, President »
(Printed name and title)

(date)

OWNER
(Signature)

«Lori Miller, City Clerk »« »
(Printed name and title)

(date)

Architect's Certification.
The Architect is not a party to the Agreement or this Amendment. By acknowledging below, the Architect certifies that it has reviewed this Amendment and the Contract Documents set forth herein and that, in accordance with the Architect's obligations under its Agreement with the Owner, the Contract Documents as set forth herein are complete and fully describe the Work as designed by the Architect.

and

OWNER
(Signature)

«Carter Fisher, City Attorney »« »
(Printed name and title)

(date)

HOBBS + BLACK ASSOCIATES, INC.,

ARCHITECT
(Signature)

«Martin Ruiter, AIA, LEED AP
Vice President - Principal in Charge »
(Printed name and title)

(date)

AIA Document A133 – 2019 Exhibit A. Copyright © 1991, 2003, 2009, and 2019. All rights reserved. "The American Institute of Architects," "American Institute of Architects," "AIA," the AIA Logo, and "AIA Contract Documents" are trademarks of The American Institute of Architects. This draft was produced at 12:01:06 ET on 02/11/2025 under Order No.3104239075 which expires on 03/16/2025, is not for resale, is licensed for one-time use only, and may only be used in accordance with the AIA Contract Documents® Terms of Service. To report copyright violations, e-mail docinfo@aiacontracts.com.
User Notes: (1916290921)

DRAFT AIA® Document A133® – 2019 Exhibit B

Insurance and Bonds

This Insurance and Bonds Exhibit is part of the Agreement, between the Owner and the Construction Manager, dated the «Twenty Ninth » day of «April» in the year «Two Thousand Twenty Five.»
(In words, indicate day, month and year.)

for the following **PROJECT**:
(Name and location or address)

Livonia City Center Program
«New Police Station Facility»

THE OWNER:
(Name, legal status, and address)

City of Livonia
33000 Civic Center Drive
Livonia, Michigan 48154

THE CONSTRUCTION MANAGER:
(Name, legal status, and address)

«Granger Construction Company »« »
6267 Aurelius Rd.
Lansing, Michigan 48911 »
«(517) 393-1670 »

ADDITIONS AND DELETIONS: The author of this document has added information needed for its completion. The author may also have revised the text of the original AIA standard form. An *Additions and Deletions Report* that notes added information as well as revisions to the standard form text is available from the author and should be reviewed.

This document has important legal consequences. Consultation with an attorney is encouraged with respect to its completion or modification.

This document is intended to be used in conjunction with AIA Document A201™–2017, General Conditions of the Contract for Construction. Article 11 of A201™–2017 contains additional insurance provisions.

TABLE OF ARTICLES

B.1 GENERAL

B.2 OWNER'S INSURANCE

B.3 CONSTRUCTION MANAGER'S INSURANCE AND BONDS

B.4 SPECIAL TERMS AND CONDITIONS

ARTICLE B.1 GENERAL

The Owner and Construction Manager shall purchase and maintain insurance, and provide bonds, as set forth in this Exhibit. As used in this Exhibit, the term General Conditions refers to AIA Document A201™–2017, General Conditions of the Contract for Construction, as modified.

ARTICLE B.2 OWNER'S INSURANCE

§ B.2.1 General

Prior to commencement of the Work, the Owner shall secure the insurance, and provide evidence of the coverage, required under this Article B.2 and, upon the Construction Manager's request, provide a copy of the property insurance policy or policies required by

ELECTRONIC COPYING of any portion of this AIA® Document to another electronic file is prohibited and constitutes a violation of copyright laws as set forth in the footer of this document.

AIA Document A133 – 2019 Exhibit B. Copyright © 2019. All rights reserved. "The American Institute of Architects," "American Institute of Architects," "AIA," the AIA Logo, and "AIA Contract Documents" are trademarks of The American Institute of Architects. This draft was produced at 12:00:59 ET on 02/11/2025 under Order No.3104239075 which expires on 03/16/2025, is not for resale, is licensed for one-time use only, and may only be used in accordance with the AIA Contract Documents® Terms of Service. To report copyright violations, e-mail docinfo@aiacontracts.com.
User Notes: (1698133303)

Section B.2.3. The copy of the policy or policies provided shall contain all applicable conditions, definitions, exclusions, and endorsements.

§ B.2.2 Liability Insurance
The Owner shall be responsible for purchasing and maintaining the Owner's usual general liability insurance.

§ B.2.3 Required Property Insurance
§ B.2.3.1 Unless this obligation is placed on the Construction Manager pursuant to Section B.3.3.2.1, the Owner shall purchase and maintain, from an insurance company or insurance companies lawfully authorized to issue insurance in the jurisdiction where the Project is located, property insurance written on a builder's risk "all-risks", with limits to be determined by the Owner. The property insurance shall be maintained until Substantial Completion , unless otherwise agreed in writing by the parties to this Agreement. This insurance shall include the interests of the Owner, Construction Manager, Subcontractors, and Sub-subcontractors in the Project as insureds. This insurance shall include the interests of mortgagees as loss payees.

§ B.2.3.1.1 Deductibles and Self-Insured Retentions. If the insurance required by this Section B.2.3 is subject to deductibles or self-insured retentions, the Construction Manager shall be responsible for all loss not covered because of such deductibles or retentions resulting from the acts or omissions of the Construction Team.

§ B.2.3.2 Occupancy or Use Prior to Substantial Completion. The Owner's occupancy or use of any completed or partially completed portion of the Work prior to Substantial Completion shall not commence until the insurance company or companies providing the insurance under Section B.2.3.1 have consented in writing to the continuance of coverage. The Owner and the Construction Manager shall take no action with respect to partial occupancy or use that would cause cancellation, lapse, or reduction of insurance, unless they agree otherwise in writing.

ARTICLE B.3 CONSTRUCTION MANAGER'S INSURANCE AND BONDS
§ B.3.1 General
§ B.3.1.1 Certificates of Insurance. The Construction Manager shall provide certificates of insurance acceptable to the Owner evidencing compliance with the requirements in this Article B.3 at the following times: (1) prior to commencement of the Work; (2) upon renewal or replacement of each required policy of insurance; and (3) upon the Owner's written request. An additional certificate evidencing continuation of commercial liability coverage, including coverage for completed operations, shall be submitted with the final Application for Payment and thereafter upon renewal or replacement of such coverage until the expiration of the periods required by Section B.3.2.1 and Section B.3.3.1. The certificates will show the parties outlined in Section B.3.1.3 as an additional insured on the Construction Manager's Commercial General Liability and excess or umbrella liability policy or policies.

§ B.3.1.2 Deductibles and Self-Insured Retentions. The Construction Manager shall disclose to the Owner any deductible or self- insured retentions applicable to any insurance required to be provided by the Construction Manager.

§ B.3.1.3 Additional Insured Obligations. To the fullest extent permitted by law, the Construction Manager shall cause the commercial general liability coverage and excess umbrella policies to include (1) the Owner, the Owner's Representative Consultant, the Architect, and the Architect's consultants as additional insureds for claims caused in whole or in part by the Construction Manager's negligent acts or omissions during the Construction Manager's operations, and (2) the Owner as an additional insured for claims caused in whole or in part by the Construction Manager's negligent acts or omissions for which loss occurs during completed operations. The additional insured coverage shall be primary and non-contributory to any of the Owner's general liability insurance policies and shall apply to both ongoing and completed operations. To the extent commercially available, the additional insured coverage shall be no less than that provided by Insurance Services Office, Inc. (ISO) forms CG 20 10 07 04, CG 20 37 07 04, and, with respect to the Architect and the Architect's consultants, CG 20 32 07 04.

§ B.3.2 Construction Manager's Required Insurance Coverage
§ B.3.2.1 The Construction Manager shall purchase and maintain the following types and limits of insurance from an insurance company or insurance companies lawfully authorized to issue insurance in the jurisdiction where the Project

AIA Document A133 – 2019 Exhibit B. Copyright © 2019. All rights reserved. "The American Institute of Architects," "American Institute of Architects," "AIA," the AIA Logo, and "AIA Contract Documents" are trademarks of The American Institute of Architects. This draft was produced at 12:00:59 ET on 02/11/2025 under Order No.3104239075 which expires on 03/16/2025, is not for resale, is licensed for one-time use only, and may only be used in accordance with the AIA Contract Documents® Terms of Service. To report copyright violations, e-mail docinfo@aiacontracts.com.
User Notes: (1698133303)

is located. The Construction Manager shall maintain the required insurance until the expiration of the period for correction of Work as set forth in Section 12.2.2 of the General Conditions, unless a different duration is stated below:
(If the Construction Manager is required to maintain insurance for a duration other than the expiration of the period for correction of Work, state the duration.)
Not Applicable.

§ B.3.2.2 Commercial General Liability

§ B.3.2.2.1 Commercial General Liability insurance for the Project written on an occurrence form with policy limits of not less than Two Million Dollars ($ 2,000,000) for each occurrence and Four Million Dollars ($ 4,000,000) general aggregate, and Four Million Dollars ($ 4,000,000) aggregate for products-completed operations hazard, providing coverage for claims including

- **.1** damages because of bodily injury, sickness or disease, including occupational sickness or disease, and death of any person;
- **.2** personal injury and advertising injury;
- **.3** damages because of physical damage to or destruction of tangible property, including the loss of use of such property;
- **.4** bodily injury or property damage arising out of completed operations; and
- **.5** the Construction Manager's indemnity obligations under Section 3.18 of the General Conditions.

§ B.3.2.2.2 The Construction Manager's Commercial General Liability policy under this Section B.3.2.2 shall not contain an exclusion or restriction of coverage for the following:

- **.1** Claims by one insured against another insured, if the exclusion or restriction is based solely on the fact that the claimant is an insured, and there would otherwise be coverage for the claim.
- **.2** Claims for property damage to the Construction Manager's Work arising out of the products-completed operations hazard where the damaged Work or the Work out of which the damage arises was performed by a Subcontractor.
- **.3** Claims for bodily injury other than to employees of the insured.
- **.4** Claims for indemnity under Section 3.18 of the General Conditions arising out of injury to employees of the insured.
- **.5** Claims or loss excluded under a prior work endorsement or other similar exclusionary language.
- **.6** Claims or loss due to physical damage under a prior injury endorsement or similar exclusionary language.
- **.7** Claims related to residential, multi-family, or other habitational projects, if the Work is to be performed on such a project.
- **.8** Claims related to roofing, if the Work involves roofing.
- **.9** Claims related to exterior insulation finish systems (EIFS), synthetic stucco or similar exterior coatings or surfaces, if the Work involves such coatings or surfaces.
- **.10** Claims related to earth subsidence or movement, where the Work involves such hazards.
- **.11** Claims related to explosion, collapse and underground hazards, where the Work involves such hazards.

§ B.3.2.3 Automobile Liability covering vehicles owned, and non-owned vehicles used, by the Construction Manager, with policy limits of not less than One Million Dollars ($ 1,000,000) per accident, for bodily injury, death of any person, and property damage arising out of the ownership, maintenance and use of those motor vehicles along with any other statutorily required automobile coverage.

§ B.3.2.4 The Construction Manager may achieve the required limits and coverage for Commercial General Liability and Automobile Liability through a combination of primary and excess or umbrella liability insurance, provided such primary and excess or umbrella insurance policies result in the same or greater coverage as the coverages required under Section B.3.2.2 and B.3.2.3, and in no event shall any excess or umbrella liability insurance provide narrower coverage than the primary policy. The excess policy shall not require the exhaustion of the underlying limits only through the actual payment by the underlying insurers.

§ B.3.2.5 Workers' Compensation at statutory limits.

§ B.3.2.6 Employers' Liability with policy limits not less than One Million Dollars ($ 1,000,000) each accident, One Million Dollars ($ 1,000,000) each employee, and One Million Dollars ($ 1,000,000) policy limit.

AIA Document A133 – 2019 Exhibit B. Copyright © 2019. All rights reserved. "The American Institute of Architects," "American Institute of Architects," "AIA," the AIA Logo, and "AIA Contract Documents" are trademarks of The American Institute of Architects. This draft was produced at 12:00:59 ET on 02/11/2025 under Order No.3104239075 which expires on 03/16/2025, is not for resale, is licensed for one-time use only, and may only be used in accordance with the AIA Contract Documents® Terms of Service. To report copyright violations, e-mail docinfo@aiacontracts.com.
User Notes: (1698133303)

§ B.3.2.7 Jones Act, and the Longshore & Harbor Workers' Compensation Act, as required, if the Work involves hazards arising from work on or near navigable waterways, including vessels and docks

§ B.3.2.8 If the Construction Manager is required to furnish professional services as part of the Work, the Construction Manager shall procure Professional Liability insurance covering performance of the professional services, with policy limits of not less than One Million Dollars ($ 1,000,000) in the aggregate.

§ B.3.2.9 If the Work involves the transport, dissemination, use, or release of pollutants, the Construction Manager shall procure Pollution Liability insurance, with policy limits of not less than Two Million Dollars ($ 2,000,000) per claim and Four Million Dollars ($ 4,000,000) in the aggregate.

§ B.3.2.10 Coverage under Sections B.3.2.8 and B.3.2.9 may be procured through a Combined Professional Liability and Pollution Liability insurance policy, with combined policy limits of not less than Four Million Dollars ($ 4,000,000) per claim and Eight Million Dollars ($ 8,000,000) in the aggregate.

§ B.3.2.11 Insurance for maritime liability risks associated with the operation of a vessel. Not applicable.

§ B.3.2.12 Insurance for the use or operation of manned or unmanned aircraft. Not applicable; the Construction Manager shall not utilize a drone or any aircraft on or above the site without prior written approval from the Owner and without appropriate insurance coverage in place.

§ B.3.3 Construction Manager's Other Insurance Coverage

§ B.3.3.1 Insurance selected and described in this Section B.3.3 shall be purchased from an insurance company or insurance companies lawfully authorized to issue insurance in the jurisdiction where the Project is located. The Construction Manager shall maintain the required insurance until the expiration of the period for correction of Work as set forth in Section 12.2.2 of the General Conditions.

(If the Construction Manager is required to maintain any of the types of insurance selected below for a duration other than the expiration of the period for correction of Work, state the duration.)

« »

§ B.3.3.2 The Construction Manager shall purchase and maintain the following types and limits of insurance in accordance with Section B.3.3.1.

(Select the types of insurance the Construction Manager is required to purchase and maintain by placing an X in the box(es) next to the description(s) of selected insurance. Where policy limits are provided, include the policy limit in the appropriate fill point.)

[**« X »**] **§ B.3.3.2.1** Property insurance of the same type and scope satisfying the requirements identified in Section B.2.3, which, if selected in this Section B.3.3.2.1, relieves the Owner of the responsibility to purchase and maintain such insurance except insurance required by Section B.2.3.1.3 and Section B.2.3.3. The Construction Manager shall comply with all obligations of the Owner under Section B.2.3 except to the extent provided below. The Construction Manager shall disclose to the Owner the amount of any deductible, and the Owner shall be responsible for losses within the deductible. Upon request, the Construction Manager shall provide the Owner with a copy of the property insurance policy or policies required. The Owner shall adjust and settle the loss with the insurer and be the trustee of the proceeds of the property insurance in accordance with Article 11 of the General Conditions unless otherwise set forth below:

(Where the Construction Manager's obligation to provide property insurance differs from the Owner's obligations as described under Section B.2.3, indicate such differences in the space below. Additionally, if a party other than the Owner will be responsible for adjusting and settling a loss with the insurer and acting as the trustee of the proceeds of property insurance in accordance with Article 11 of the General Conditions, indicate the responsible party below.)

« »

[**« »**] **§ B.3.3.2.2 Railroad Protective Liability Insurance**, with policy limits of not less than « » ($ « ») per claim and « » ($ « ») in the aggregate, for Work within fifty (50) feet of railroad property.

AIA Document A133 – 2019 Exhibit B. Copyright © 2019. All rights reserved. "The American Institute of Architects," "American Institute of Architects," "AIA," the AIA Logo, and "AIA Contract Documents" are trademarks of The American Institute of Architects. This draft was produced at 12:00:59 ET on 02/11/2025 under Order No.3104239075 which expires on 03/16/2025, is not for resale, is licensed for one-time use only, and may only be used in accordance with the AIA Contract Documents® Terms of Service. To report copyright violations, e-mail docinfo@aiacontracts.com.
User Notes: (1698133303)

[« »] § **B.3.3.2.3 Asbestos Abatement Liability Insurance**, with policy limits of not less than « » ($ « ») per claim and « » ($ « ») in the aggregate, for liability arising from the encapsulation, removal, handling, storage, transportation, and disposal of asbestos-containing materials.

[« »] § **B.3.3.2.4** Insurance for physical damage to property while it is in storage and in transit to the construction site on an "all-risks" completed value form.

[« »] § **B.3.3.2.5** Property insurance on an "all-risks" completed value form, covering property owned by the Construction Manager and used on the Project, including scaffolding and other equipment.

[« X »] § **B.3.3.2.6 Other Insurance**
(List below any other insurance coverage to be provided by the Construction Manager and any applicable limits.)

Coverage	Limits
Excess or Umbrella Liability Insurance	$10,000,000 each occurrence $10,000,000 in the aggregate

§ B.3.4 Performance Bond and Payment Bond
The Construction Manager shall provide surety bonds, from a company or companies lawfully authorized to issue surety bonds in the jurisdiction where the Project is located, as follows:
(Specify type and penal sum of bonds.)

Type	Penal Sum ($0.00)
Payment Bond	100% of the Contract Sum
Performance Bond	100% of the Contract Sum

Payment and Performance Bonds shall be AIA Document A312™, Payment Bond and Performance Bond, or contain provisions identical to AIA Document A312™, current as of the date of this Agreement.

The Construction Manager shall subcontract with Subcontractors that are trustworthy, financially able, and have a track record in successfully completing trade works of similar size and complexity. Therefore, The Construction Manager may in its discretion, determine if any Subcontractors will need to supply performance and payment bonds. If bonds are required of any Subcontractors, all such bonds shall be (i) purchased solely at the expense of the Construction Manager (or the Subcontractor supplying them), without reimbursement under the Contract Sum or Guaranteed Maximum Price or otherwise, and (ii) dual obligee bonds, naming the Owner as one of the obligees. The Owner may in its discretion determine, with the recommendation of the Construction Manager to require a Subcontractor to supply performance and payment bonds in addition to the Construction Manager's bond when (i) the Subcontractor's bid including the added cost of the bond is significantly below the next bona fide bid, and (ii) the Construction Manager has no previous experience or work experience with the Subcontractor, and (iii) it is necessary to accept the Subcontractor's bid in order to meet the established Guaranteed Maximum Price. In such event, the Owner shall reimburse the Construction Manager for purchasing the bond for the Subcontractor under the Contract Sum. Owner will not accept sub-guard insurance in lieu of performance and payment bond.

ARTICLE B.4 SPECIAL TERMS AND CONDITIONS
Special terms and conditions that modify this Insurance and Bonds Exhibit, if any, are as follows:
«None. »

AIA Document A133 – 2019 Exhibit B. Copyright © 2019. All rights reserved. "The American Institute of Architects," "American Institute of Architects," "AIA," the AIA Logo, and "AIA Contract Documents" are trademarks of The American Institute of Architects. This draft was produced at 12:00:59 ET on 02/11/2025 under Order No.3104239075 which expires on 03/16/2025, is not for resale, is licensed for one-time use only, and may only be used in accordance with the AIA Contract Documents® Terms of Service. To report copyright violations, e-mail docinfo@aiacontracts.com.
User Notes: (1698133303)

EXHIBIT C, consisting of **4** pages, referred to in and part of the Agreement between **Owner** and **Construction Manager** dated _____, 2025.

Initials

Owner: _____

Construction Manager: _____

Scope of Preconstruction Services

General

The Construction Manager's Preconstruction Services shall include construction cost estimating, construction budget control, review of design for constructability, value engineering, and life-cycle costing, influence the methods and sequence of construction, scoping of Bid Packages and Work Categories, publicizing the project to the bidding community and soliciting bids from subcontractors and vendors, and tabulating bids received, review and recommend bid awards. Prior to the commencement of Construction Phase services, the Construction Manager shall propose, for acceptance by the Owner, a Guaranteed Maximum Price (GMP) for all Construction Phase services. Preconstruction Services for this Program will carry through the completion of the Contract Documents and bidding of all Phases of Work for the entire Program. The Owner reserves the right to make reasonable changes to this schedule as Project requirements dictate.

A. Schedules

The Construction Manager shall prepare and submit to the Owner a CPM schedule for the permitting, bidding and award of trades and all activities Construction Phases of the Project. This schedule shall be updated with each estimate and shall reflect any revisions in the estimates, which affect the construction duration. Activity detail on the schedules must directly correspond to the detail of the budget line items. The schedule should include time for Owner-provided work and FFE installation. The strategy of phasing the construction of the Project should be identified from start through completion on the overall schedule. The phasing plan should be developed in coordination with the Owner, Owner's Representative Consultant, and Architect during the Design Development phase of the Project. The schedule will place significant emphasis on the phasing and logistics planning of the Project. It will take into careful consideration areas of the existing and adjacent facilities and site that must remain open during construction. The phasing should be clearly delineated.

B. Document Review

1. The Construction Managers shall timely and continuously review the Design Documents to be familiar with the proposed Work throughout the design process.
2. Design/Preconstruction Services review meetings may be held as required through the Design Phase of the Project.
3. The Construction Manager shall develop and maintain a Request for Information (RFI) Log and/or an Issues and Answers Log to aid in the prompt transfer of information between all members of the Project Team. The log will be monitored and updated on a continual basis and addressed at the review meetings. Unresolved issues are to be identified in each review meeting with follow-up responsibilities and response dates being assigned to the appropriate Project Team members, including the Construction Manager.
4. The Construction Manager shall provide the members of the Project Team continual input addressing constructability, availability of materials and qualified trades for specialized systems, comparative cost/benefit analyses for various building systems, and budget/schedule impact as specific phases of the overall design are developed in order to ensure the development and completion of Contract Documents within the budget and schedule limitations.

5. If necessary in order for the Construction Manager to provide accurate information, it shall, at no additional cost to the Owner, involve the services of outside consultants and/or subcontractors in the review and budgeting of specialized systems such as structural, skin/curtain-wall, equipment, elevators, furnishings, plumbing, fire suppression, mechanical, electrical, utility service connections, pneumatic tube, food service, low voltage, and life safety.

C. Design Estimates

The Construction Manager shall prepare and submit four (4) formal estimates for the Project and/or each sub-component of the Project during the Preconstruction Services Phase, and as required by the Agreement. The Construction Manager will also provide periodic opinions of cost during the Design Phase as needed for drawing development in order for the team to make informed decisions and continue with design. Throughout estimating process, the Construction Manager will closely collaborate with the Architect.

1. First estimate shall be based on the conceptual planning and design plans and outline specifications. This first estimate shall be square footage based using historical and benchmark cost data for constructed projects of similar scope to validate the initial Project budget set forth by the Owner and the Owner's representatives.
2. The Construction Manager shall prepare and present to the Owner and the Project Team a second formal Project estimate at the conclusion of Schematic Design. This second estimate shall be divided into the 16 CSI Divisions, and allows the Owner to rely upon it as a "maximum target price" of the Project. This estimate should be reviewed with the Architect prior to presentation for reconciliation of finish levels, design intent, etc. Line items for design and contractor contingency shall be clearly called out.
3. The Construction Manager shall prepare and present to the Owner and the Project Team a third formal Project estimate at the conclusion of Design Development. This third estimate shall be a "full take-off estimate" of sufficient substance and detail so the Owner will be able to rely upon it and, if necessary, to use the estimate to secure financing of the Project or for each sub-component of the Project. The Construction Manager shall fully engage the Architect and other design team members to ensure that the scope, quality, and costs of the Project are aligned, not compromised. Line items for design and contractor contingency shall be clearly called out. The Construction Manager should also provide detail behind their personnel costs and direct costs for review.
4. The Construction Manager shall prepare and submit a fourth estimate after 90% of the Project and/or each sub-component of the Project has been bid and bought out. This estimate shall establish and represent the final GMP of the Project and/or each sub-component of the Project. Unless otherwise agreed to by the Owner, if the final GMP exceeds the Owner's budget for the Project, the Construction Manager shall work with the Architect to redesign or redraw any plans and/or specifications and if necessary re-bid portions of the Project in order to align costs to the Owner's budget for the Project and the Construction Manager shall bear the costs for such necessary redesign or redraw by the Architect.

D. Constructability Review

The Construction Manager shall prepare and submit a constructability review at the Design Development and 50% Construction Document portion of the Project. This review should be of sufficient detail to match the development of the Construction Documents. The Construction Manager shall review the interface of various systems; at a minimum, the following should be addressed: a) Foundations/ Structural b) Building Envelope c) Interior Architectural, d) MEP, and e) Site Work. The constructability review should focus on items that may impact Cost, Time, and/or quality of the Project.

E. Value (Planning) Engineering

Concurrent with the submission of each estimate, the Construction Manager shall submit a detailed list of value engineering options developed with the Architect and potential suppliers/subcontractors with the associated estimated costs. As necessary to achieve the Owner's objectives, the Construction Manager shall meet and work with the members of the Project Team in the evaluation of the various options and incorporate selected options into the estimates. The Construction Manager shall participate as a Project Team member in maximizing the Project value for the Owner.

F. Equipment Review and Coordination of Direct Owner Contracts

1. The Construction Manager shall assist the Owner and the Owner's consultant's in reviewing and budgeting the Owner Furnished Equipment and Furnishings material and installation costs or other items potentially affecting the Work, and shall include these budgets or allowances to the extent they are reasonably known, in each estimate to ensure that all costs are accounted for.
2. When required, the Construction Manager will work with the Owner's consultant's during the Preconstruction Services Phase of the Project to assist the Owner in receiving bids and placing purchase orders for long lead equipment, material, etc. as designated in the schedule.

G. Cash Flow Analysis

Concurrent with the submission of each Project estimate the Construction Manager shall submit a cash flow analysis for the overall construction duration of the Project. This analysis should be derived from cost loading the construction schedule as developed and revised by the Construction Manager, showing projected monthly billings for "Completed Work in Place". The analysis shall list individual monthly billings, accumulated billings to date, and percentages of completion on a monthly basis. Should the Construction Manager be successful in receiving the actual construction contract, the Construction Manager will be required to maintain the cash flow analysis throughout the duration of the Project.

H. Scoping of Bid Packages and Work Categories (For Each Project)

Bid Packages are defined as those portions of the overall Project scope that are released for competitive bidding at planned bid dates. Bid Packaging identifies opportunities for phased construction in order to accelerate the Construction Schedule to accommodate Project constraints. The main intent in developing Bid Packages and Work Categories is to account for every item of work in the overall Project and identify the trade or Construction Manager responsible for performing the Work. Additionally, the development of Bid Packages and Work Categories is to overcome scope overlaps or omissions between trades. The Construction Manager, with assistance of the members of the Project Team, shall define and prepare Scopes of Work for various bid packages and Work Categories as required ensuring the Master design and construction schedule is maintained and ensuring all required Work shall be included.
The Construction Manager shall identify during the Design Phase items which due to long lead, scarcity, market fluctuations may be recommended to purchase early in the process. The list along with approximate value of award shall be presented to the Owner to allow sufficient time to approve the development of the Bid Packages with the Architect. If required by the Owner, the Construction Manager shall develop Bid Packages to encourage Minority Owned Business, Women Owned Business, and Disadvantaged Business participation.

I. Subcontractor/Vendor Promotion

1. The Construction Manager shall proactively promote and generate interest of local and regional bidders and develop a master list of Vendors and Subcontractors, which have shown interest in submitting Bid Proposals for the Project. This list should include Vendors and Subcontractors for all categories of Work included in the total Project. The Construction Manager is required to report the percentage of the total Cost of Work that the local firms represent.
2. This list should include only companies that are responsible, qualified and financially capable.

J. Construction Staging and Site Management Planning

The Construction Manager, with input from the members of the Project Team, shall develop a proposed site management plan for staging construction operations. This plan will test the site to ensure all functionality described in the design is working. At minimum, the plan shall include such particulars as primary access roads to and from the construction site, construction parking, on-site entrances, construction personnel entrances and traffic patterns, location of temporary facilities, location of hoists, cranes and other stationary equipment if site accessibility is critical and dictates specific placement, locations of barricades and construction fences, emergency egress locations, etc. so that Owner's use of existing site or facility can be minimally disrupted or inconvenienced.

K. Bidding and Construction Phase

1. Work Packaging & Bidding
    a. The Construction Manager shall create a labor analysis, to include types and quantities of labor required for the Project. Review the requirements in light of the marketplace and make any recommendations necessary to assure the availability of an adequate labor force.
    b. The Construction Manager shall develop Work-packaging recommendations and create package bidding schedule and procedure and review these with the Owner prior to issuing bid packages.
    c. The Construction Manager shall analyze the bid market, notify potential bidders, publish bid calendar, and publish all required notices in accordance with the law and in cooperation with the Owner.
2. During the Bidding Process, the Construction Manager shall:
    a. Manage, facilitate, and coordinate the bid phase.
    b. Assemble and distribute Contract Document Work packages for bidding, confirm that all requirements have been made, and all Scope items covered.
    c. Maintain a list of all potential bidders, subcontractors, and vendors that intend to bid the Work.
    d. Coordinate with the Owner for its receipt of bids, analyze and reconcile, and present bid results arrayed against the estimate for each individual Work Package for the Owner's approval. The Construction Manager shall hold all construction contracts for the Project.
    e. Establish and conduct post-bid and pre-award meetings.

[END OF EXHIBIT C]

EXHIBIT D, consisting of the attached page(s), referred to in and part of the **Agreement between Owner and Construction Manager** dated April 29, 2025.

Initials

Owner _____

Construction Manager: _____

Phasing and Project Milestone Schedule

[See attached Phasing and Milestone Schedule]

[remainder of the page is blank]

City of Livonia New Police Station Facility | Preliminary Project Schedule

GRANGER

ID	Task Mode	Task Name	Duration	Start	Finish
1		**City of Livonia New Police Station Facility (67,800 SF)**	**628 days**	**Tue 2/11/25**	**Mon 8/2/27**
2		**Preconstruction**	**528 days**	**Tue 2/11/25**	**Wed 3/10/27**
3		CM Interview	0 days	Mon 3/31/25	Mon 3/31/25
4		Develop CM Award Recommendations	11 days	Mon 3/31/25	Mon 4/14/25
5		Expected CM Award Date (City Council April 14, 2025 Meeting)	0 days	Mon 4/14/25	Mon 4/14/25
6		**Design Phase**	**187 days**	**Tue 2/11/25**	**Mon 11/3/25**
7		**Schematic**	**79 days**	**Tue 2/11/25**	**Mon 6/2/25**
8		Program Validation	7.4 wks	Tue 2/11/25	Wed 4/2/25
9		Schematic Design	4 wks	Thu 4/3/25	Wed 4/30/25
10		Schematic Design Cost Estimate	2 wks	Thu 5/1/25	Wed 5/14/25
11		Schematic Design Cost Estimate Reconciliation	1 wk	Thu 5/15/25	Wed 5/21/25
12		Professional Team Review of SD Estimate	7 days	Thu 5/22/25	Mon 6/2/25
13		City Council Approval (City Council Meeting on June 2, 2025)	0 days	Mon 6/2/25	Mon 6/2/25
14		**Design Development**	**71 days**	**Thu 5/1/25**	**Mon 8/11/25**
15		Design Development	8 wks	Thu 5/1/25	Thu 6/26/25
16		Design Development Cost Estimate	3 wks	Fri 6/27/25	Fri 7/18/25
17		Design Development Cost Estimate Reconciliation	9 days	Mon 7/21/25	Thu 7/31/25
18		Professional Team Review of DD Estimate	7 days	Fri 8/1/25	Mon 8/11/25
19		City Council Approval (City Council Meeting on August 11, 2025)	0 days	Mon 8/11/25	Mon 8/11/25
20		**Construction Documents**	**90 days**	**Fri 6/27/25**	**Mon 11/3/25**
21		Construction Documentation	16 wks	Fri 6/27/25	Mon 10/20/25
22		Construction Documents Cost Estimate	2 wks	Tue 10/21/25	Mon 11/3/25
23		**Bidding/GMP**	**96 days**	**Tue 10/14/25**	**Mon 3/2/26**
24		Prepare & Release Bid Documents	4 wks	Tue 10/14/25	Mon 11/10/25
25		Bidding Period	3 wks	Tue 11/11/25	Wed 12/3/25
26		Bids Due	0 days	Wed 12/3/25	Wed 12/3/25
27		Post-Bid Interviews, Validate Potential Subcontractors, Assemble Contract Award Recommendations & GMP	4 wks	Thu 12/4/25	Fri 1/2/26
28		Present GMP to Professional Team	6 days	Mon 1/5/26	Mon 1/12/26
29		City Council Approval of GMP (City Council Meeting on January 12, 2026)	0 days	Mon 1/12/26	Mon 1/12/26

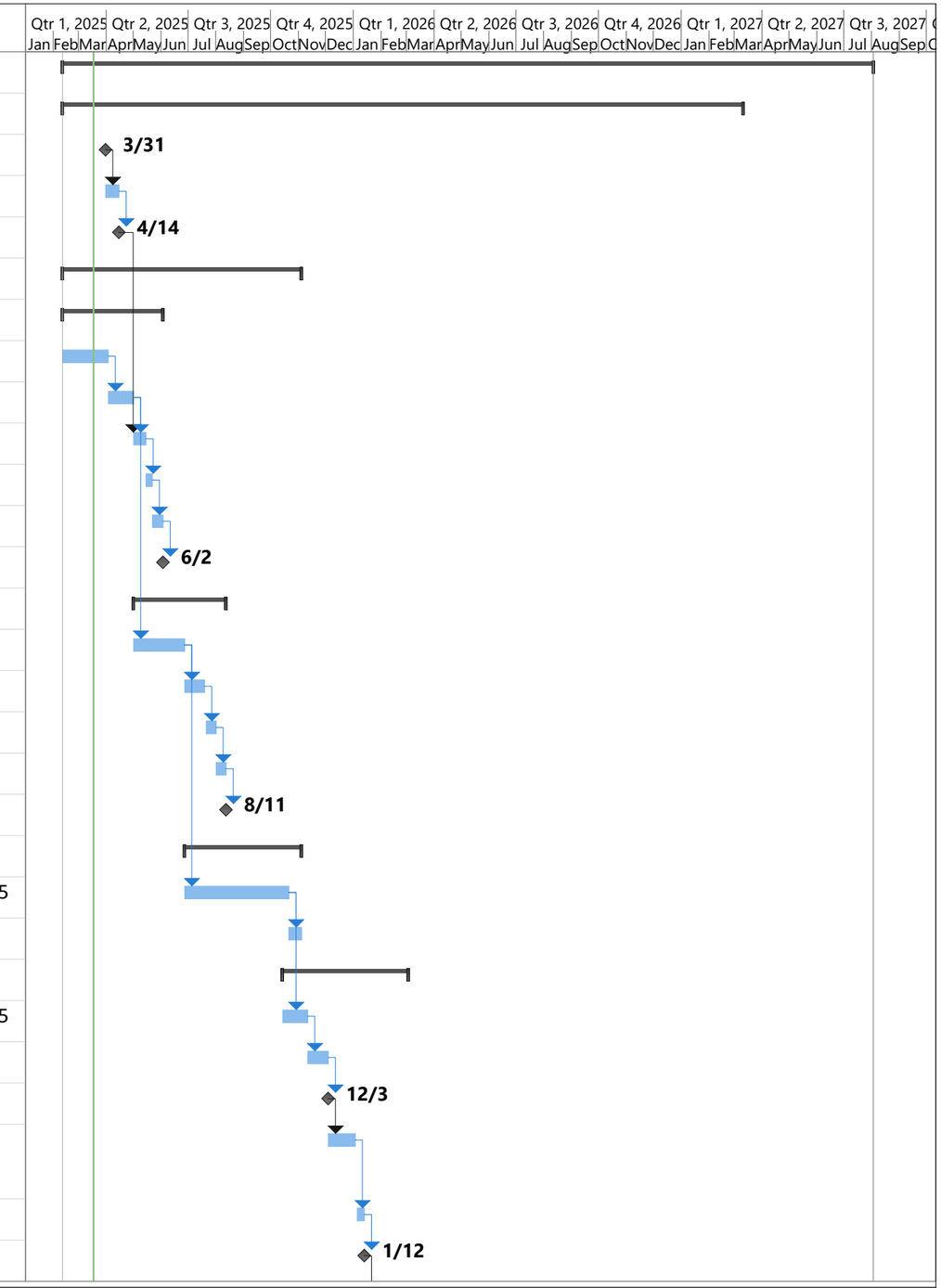

Project: LPD - Schedule
Date: Tue 3/18/25

Task | Milestone | Summary

City of Livonia New Police Station Facility | Preliminary Project Schedule

GRANGER

ID	Task Mode	Task Name	Duration	Start	Finish
30		Issue Subcontracts	1 wk	Tue 1/13/26	Mon 1/19/26
31		Execute Subcontract Agreements, Obtain Certificates of Insurance, etc.	6 wks	Tue 1/20/26	Mon 3/2/26
32		**Procurement**	**275 days**	**Mon 2/9/26**	**Wed 3/10/27**
33		Submittals Provided to Granger	0 days	Mon 2/9/26	Mon 2/9/26
34		Submittals Approved	3 wks	Tue 2/10/26	Mon 3/2/26
35		Generator (52 weeks)	52 wks	Tue 3/3/26	Wed 3/10/27
36		OH Doors (24 weeks)	20 wks	Tue 3/3/26	Wed 7/22/26
37		HVAC Equipment (20 weeks)	16 wks	Tue 3/3/26	Tue 6/23/26
38		Structural Steel (10 weeks)	8 wks	Tue 3/3/26	Mon 4/27/26
39		HM Frames (8 weeks)	6 wks	Tue 3/3/26	Mon 4/13/26
40		**Construction (16 months)**	**361 days**	**Mon 3/2/26**	**Mon 8/2/27**
41		Mobilization	2 wks	Mon 3/2/26	Fri 3/13/26
42		Site Utilities	8 wks	Mon 3/16/26	Fri 5/8/26
43		Foundations	8 wks	Mon 5/11/26	Tue 7/7/26
44		Structure	12 wks	Wed 7/8/26	Wed 9/30/26
45		Exterior Envelope	10 wks	Thu 9/17/26	Wed 11/25/26
46		Enclosure	0 days	Wed 11/25/26	Wed 11/25/26
47		MEP Rough In	14 wks	Mon 11/30/26	Tue 3/9/27
48		50% Security & AHJ Inspections	2 wks	Wed 3/10/27	Tue 3/23/27
49		Architectural Finishes	13 wks	Wed 1/27/27	Tue 4/27/27
50		HVAC Unit Start Up & Commissioning	3 wks	Wed 4/14/27	Tue 5/4/27
51		Electrical & Security Electronics Start Up & Commissioning	4 wks	Wed 4/14/27	Tue 5/11/27
52		**Final Completion Tasks**	**56 days**	**Wed 5/12/27**	**Mon 8/2/27**
53		Building & MEP AHJ Final Inspections	2 wks	Wed 5/12/27	Tue 5/25/27
54		Security Functional Testing & Final Inspection	2 wks	Wed 5/26/27	Wed 6/9/27
55		Punch List & Closeout	26 days	Thu 6/10/27	Mon 7/19/27
56		Certificate of Occupancy (6/23/2027)	0 days	Wed 6/23/27	Wed 6/23/27
57		FFE & Owner Move In	2 wks	Tue 7/20/27	Mon 8/2/27

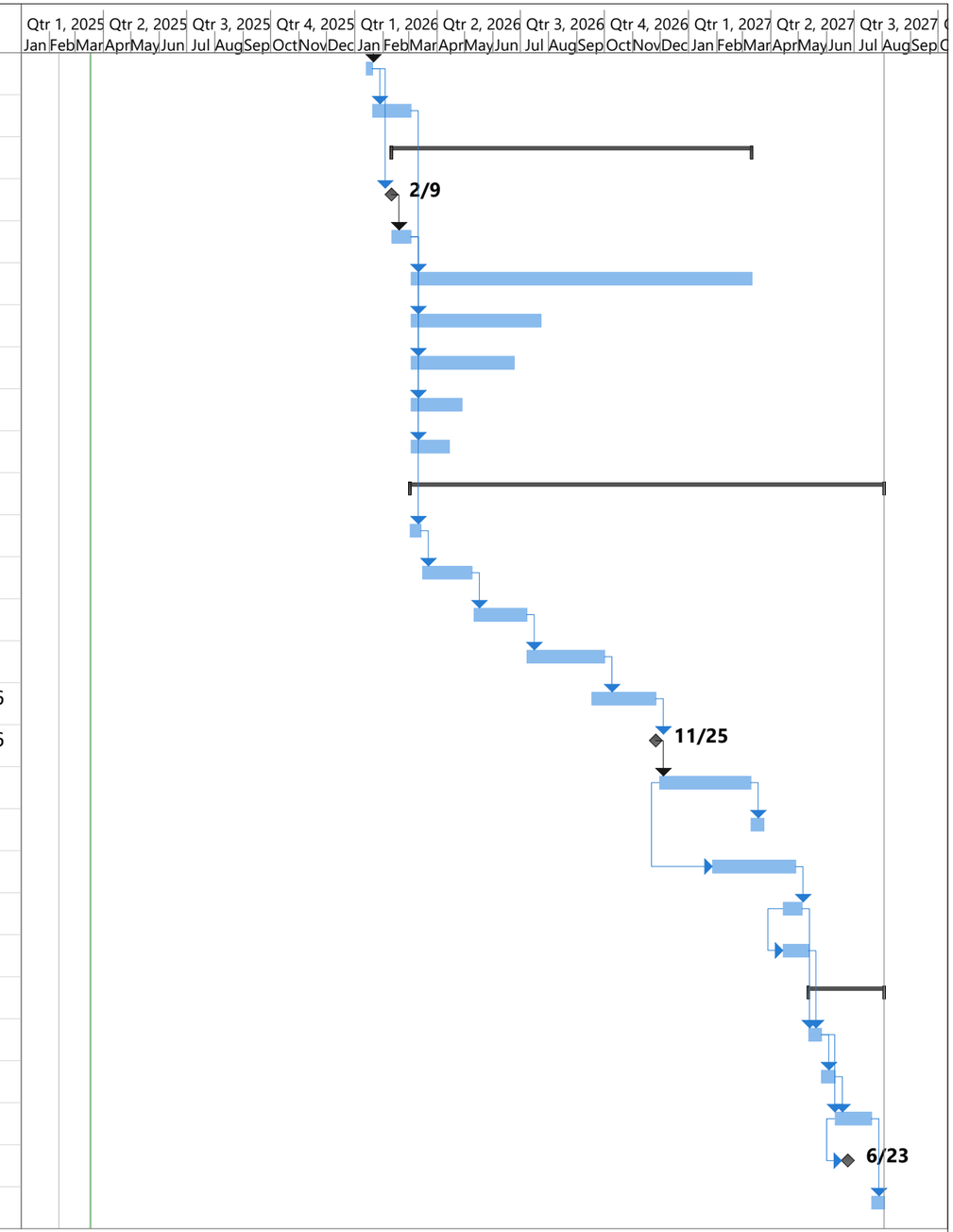

Project: LPD - Schedule
Date: Tue 3/18/25

Task | Milestone | Summary

EXHIBIT E consisting of the attached page(s), referred to in and part of **the Agreement between Owner and Construction Manager** dated April 29, 2025.

Initials

Owner _____

Construction Manager: _____

Construction Manager's Certificate(s) of Insurance

[See attached Certificate(s) of Insurance]

[remainder of the page is blank]

EXHIBIT F, consisting of 3 pages, referred to in and part of the **Agreement between Owner and Construction Manager** dated April 29, 2025.

Initials

Owner: _____

Construction Manager: _____

Owner's Travel and Business Expense Policy

[See attached Owner's Travel and Business Expense Policy]

[Remainder of this page is blank]

OWNER'S TRAVEL AND BUSINESS EXPENSES POLICY

Actual Costs: All travel and living expenses are billed for actual costs incurred, with the exception of the per diem meal allowance. Receipts are retained for all expenses.

Airfare: Airfare is the cost of round trip coach fare according to the following rules:

1. If travel originates and ends at the same location, client pays the total fare. If travel is between client sites, each client pays one-half of the fare between the two sites. For example, if a consultant flies from client A in Chicago to client B in New York, then clients A and B split the cost of the fare between Chicago and New York. Client A pays the fare from the consultant's home (or originating location), and client B pays the flight back to the consultant's home (or terminating location).

2. Reservations and ticketing are made as early as possible, using discounted, advance bookings, in order to obtain the lowest possible fare. Owner assumes the risk for penalties due to cancellations as a result of Owner's changes in consultants' schedules. Supplier assumes the risk for penalties arising from Supplier-requested schedule changes. Any deviations in the consultant's home or Owner destinations must be cost neutral to Owner and require prior approval by Owner.

Lodging and Meals

1. Lodging: Lodging is acquired near Owner's offices at a price agreeable to Owner and consistent with area rates. Suppliers use Owner's corporate rate at designated hotels whenever possible.

2. Per Diem: Meals - Meal expenses are calculated on a per diem basis, including all meals, tips, and incidental expenses. The per diem amount shall comply with the City of Livonia Ordinance 3.04.200.C and IRS guidelines.

Transportation

1. Car Rental: Car rental is for a four-door compact. Suppliers attempt to share transportation if possible.
2. Taxi/Trains: Owner is billed for the cost of taxi, bus, shuttle, or train fare to Owner's offices. Suppliers attempt to use the most cost and time efficient means for commuting to Owner's site.
3. Parking/Tolls: Owner is billed for the cost of parking and tolls associated with transportation to Owner's site, as well as airport parking and mileage to and from the airport.
4. Mileage: Mileage is billed at the standard rate published by the IRS and in accordance with the following rules:
5. Local - The lesser of the round trip distance from the Supplier's office to the Owner site or the round trip distance from the Supplier's home to the Owner site.

Travel and Business Expenses

It is the policy of Owner that all travel and business expenses be properly authorized, reported and reimbursed. It is the responsibility of Supplier and/or Supplier worker to accurately report their travel expenses in accordance with the guidelines set forth below. It is the responsibility of the Owner manager authorized to approve travel expenses to review each expense report to ensure it is consistent with the guidelines below. Owner management staff may approve exceptions to the guidelines if sound business reasons warrant.

Authorization. All travel and business expenses are to be pre-approved the appropriate Owner manager.

Expense Report. Expense reports, in a format agreed by the parties, are required to be completed for expenses incurred for business activities. Receipts are required for all expenses equal to or greater than $25. If not clearly evident, the business purpose for the travel and/or business expense should be documented. These written reports are required by IRS guidelines.

Air Travel. All reservations should be made as far in advance of the travel date as is reasonable and appropriate. The lowest possible rate, irrespective of carrier, is expected.

Class of Service. All Suppliers and/or Supplier workers are expected to travel coach class on Owner business. All Suppliers and/or Supplier workers travel by air are expected to plan their trips utilizing the lowest logical airfare, defined as follows:

1. Requires no more than one additional interim stop each way.
2. Does not increase travel time by more than one (1) hour each way.
3. Does not require a connecting flight unless that is all that is available.

Excess Baggage. Supplier personnel on Owner business are each permitted one piece of baggage wherein airline baggage charges are reimbursable. Personal baggage exceeding one bag is not reimbursable, although excess baggage charges for company materials are reimbursable.

Air Travel vs. Automobile Travel. Air travel should not be used for destinations that are two (2) hours or less driving time away from Supplier and/or Supplier workers' base office.

Travel Time. Supplier will be responsible for costs related to Supplier's travel time to its Owner business locations, if any.

Airport Connections. The least expensive alternative (i.e., airport bus, non-charter airport limousine service, rental car, cab) for travel to and from airports should be used.

Airport Parking. Use of long-term parking lots is reimbursable. Use of short-term parking lots is reimbursable up to the long-term rate Automobile Rental. Use of automobile rental is highly discouraged if there is a less expensive alternative available.

Automobile Class. A compact car should be reserved when there are one or two passengers. A mid-size car may be reserved when there are three or more passengers.

Incidental Expenses. Expense for tolls, parking and refueling are reimbursable. Traffic tickets or fines associated with traffic violations, including parking are the responsibility of Supplier.

Hotels. Supplier and/or Supplier workers are expected to use properties with which Owner has established a preferred rate program. The Owner manager can supply Supplier with the latest list of preferred hotels.

Room Service, In Room Bar/Snack Service. Room services and in room bar/snack service may be utilized and should be recorded on the expense report as reimbursable meal expense. It is expected that this expense would remain consistent with meal reimbursement guidelines.

Laundry/Valet Service, Movies, Sports, Health Club and Activity Fees. Laundry, valet, movies, sports, health club and activity fees are not a reimbursable expense.

Tipping. Tips are reimbursable and generally should be limited to: (i) baggage handling, $1 per bag; (ii) maid service, $1 per day; and restaurant, 15% to 20% of meal cost. Tips should be itemized on expense report.

Meals. Owner will reimburse for meals for actual amounts spent. It is expected that Supplier and/or Supplier workers will dine at reasonably priced establishments and stay within the following guidelines. Based on national data, average meal costs currently are $10 for breakfast, $15 for lunch and $30 for dinner. Supplier and Supplier workers will be reimbursed for meals only in those situations when an overnight stay away of Supplier and/or Supplier's home is required by Owner.

Saturday Night Stay. Often there is a significant reduction in the cost of airfare if the itinerary includes a Saturday night stay. In such instances, Owner will cover the cost of the additional hotel expense up to the amount of the airfare savings.

[end of Exhibit F]

EXHIBIT H, consisting of 1 page, referred to in and part of the Agreement between Owner and Construction Manager dated April 29, 2025.

Initials

Owner _____

Construction Manager: _____

Construction Manager's Hourly Rate Schedule

Preconstruction Phase

Staff Name	Position	Hourly Rate
Ben Schneider	Project Executive	$ 125.00
Kyle Oberdorf	Sr. Project Manager	$ 90.00
Kevin Bywalec	Project Manager	$ 82.00
John Bort	Sr. Estimator	$ 98.00
Brian Nuenz	Estimator	$ 88.00
Jerry G	Mechanical Estimator	$ 98.00
Ben Young	Electrical Estimator	$ 98.00
Ronald Schmidt	Superintendent	$ 110.00

Construction Phase

Staff Name	Position	Hourly Rate
Ben Schneider	Project Executive	$ 125.00
Kyle Oberdorf	Sr. Project Manager	$ 90.00
Kevin Bywalec	Project Manager	$ 82.00
Brian Ziemba	Project Engineer	$ 74.00
Ronald Schmidt	Project Superintendent	$ 108.00

LETTER TO THE LIVONIA CITY COUNCIL

20.

Law
May 20, 2025

MEETING DATE	PRESENTED BY
R060225	Carter Fisher, City Attorney

AGENDA ITEM

PROPOSED AMENDMENT TO THE LIVONIA CODE OF ORDINANCE, AS AMENDED: Department of Law, re: to Section 040 of Title 13, Chapter 08 (Water Services Rates and Revenues) to provide for changes in the water service consumption rates to become effective with the first billing on or after July 1, 2025.

BACKGROUND DETAILS

At your study meeting of May 19, 2025, you referred the preparation of an ordinance amendment to Section 13.08.040 of the Livonia Code of Ordinances, to the Department of Law for submission to Council. This ordinance amendment reflects the requested changes to the water consumption rates.

Accordingly, this proposed amendment is hereby submitted for your consideration and possible adoption.

PREFERRED COUNCIL RECOMMENDATION/RESOLUTION (Please complete this field. Attachments are not to be used in lieu of the recommendation)

FIRST READ

ATTACHMENTS

1. 13.08.040 - 2025
2. S051925 LTC water and sewer rates

APPROVED BY

Carter Fisher, City Attorney — Date: May 20, 2025

Maureen Miller Brosnan, Mayor — Date: May 22, 2025

AN ORDINANCE AMENDING SECTION 040 OF TITLE 13, CHAPTER 08 (WATER SERVICE RATES AND REVENUES) OF THE LIVONIA CODE OF ORDINANCES, AS AMENDED.

THE CITY OF LIVONIA ORDAINS:

Section 1. Section 040 of Title 13, Chapter 08 the Livonia Code of Ordinances, as amended, is hereby amended to read as follows:

13.08.040 Consumption rates. Effective with the first billing on and after July 1, 2024~~5~~, water use will be charged at the following rates:

CHARGE DESCRIPTION	AMOUNT PER 100 CUBIC FEET
Base Charge	
GLWA per 100 cubic feet of water used	$ 2.~~52~~85
City of Livonia per 100 cubic feet of water used	$ 1.0~~5~~6
Use Charge per 100 cubic feet of water used	$ 3.~~57~~91
Large User (meters sizes 1.5 inch or larger)	
Charge per 100 cubic feet of water used	$ 1.~~24~~40
Total Use Charge for Large Users per 100 cubic feet of water used	$ ~~4.81~~5.31

Rates presently established shall continue for bills issued before July 1, 2024~~5~~.

Section 2. All ordinances or parts of ordinances in conflict herewith are hereby repealed only to the extent necessary to give this ordinance full force and effect.

Section 3. Should any portion of this ordinance be held invalid for any reason, such holding shall not be construed as affecting the validity of any of the remaining portions of this ordinance.

_____

LETTER TO THE LIVONIA CITY COUNCIL

21.

DPW
May 7, 2025

MEETING DATE	PRESENTED BY
S051925/R060225/R061625	Ryan Ferrell, Assistant Director of Public Works

AGENDA ITEM

REQUEST TO ADJUST WATER AND SEWER CONSUMPTION RATES, INDUSTRIAL SURCHARGE RATE AND INDUSTRIAL WASTE CONTROL CHARGE: Public Works Division, re: to become effective on July 1, 2025.

BACKGROUND DETAILS

Livonia's Department of Public Works and Finance Department have worked together on the water and sewer rates proposed for implementation on July 1, 2025. In calculating the new rates, a review was made to determine how the fiscal year 2024 rates performed in conjunction with the budget, along with an analysis of the effects of the proposed new rates on our low-, average- and high-volume water users.

Incorporating the increase in wholesale charges from the Great Lakes Water Authority and an expected reduction in water sales charges, the recommended new rates will impact customers in the following manner:

1. The proposed water and sewer rate increase is 5.76 percent (5.76%) this year for the average residential user, which is an increase of $12.00 per quarter. Average use is based on consumption of 20 units (2,000 cubic feet) per quarter, which is 15,000 gallons of water.
2. The rate increase is mainly due to a pass-through of the changes to the water charges from our wholesale provider coupled with an anticipated decrease in water sales. Overall, GLWA increased its wholesale rate by 5.69%.
3. City of Livonia users still pay less for water than users in most surrounding communities pay for an equal amount of water.
4. The new rates will be in effect from July 1, 2025, through June 30, 2026.

Additional detailed information is included in the attached letter to the Water and Sewer Board.

At a meeting of the Water and Sewer Board of the City of Livonia, the following resolution was adopted:

#WS 6809 05/25 RESOLVED that the Water and Sewer Board will request City Council at their May 19, 2025, meeting to approve the new water and sewer rate effective July 1, 2025, of $7.53 per unit. The Board recommends that Council proceed by approving amendments to the Water and Sewer

Ordinance.

PREFERRED COUNCIL RECOMMENDATION/RESOLUTION (Please complete this field. Attachments are not to be used in lieu of the recommendation)

The Department of Public Works requests Council approve the PROPOSED AMENDMENT TO THE LIVONIA CODE OF ORDINANCE, AS AMENDED: Department of Law, re: to Section 040 of Title 13, Chapter 08 (Water Services Rates and Revenues) to provide for changes in the water service consumption rates to become effective with the first billing on or after July 1, 2024.

	Old Rate 2024	**To New Rate 2025**
Water Billing per unit	$3.57	$3.91
Sewer Billing per unit	$3.35	$3.62
Total Per Unit	**$6.92**	**$7.53**

Individual Ordinance revisions are attached.

SPECIFIC NAME OF PRODUCT AND NUMBER TO BE PURCHASED (if more than one)

Water & Sewer services

CONTRACT: Amount and/or purchase price and length of contract (with dates if applicable)

n/a

DETAILED WORK BEING PERFORMED

n/a

FISCAL CONSIDERATIONS (Amount requested and Account(s) used. If applicable, Grant Funding information)

n/a

ACCEPTANCE OF BID (Please detail the following: Why accepted, why not lowest bidder, company name, contact person, full address)

n/a

REASON TO WAIVE BID PROCESS (Emergency, Professional services, No advantage to City and why, Consortium package, etc): Waive the formal bidding process in accordance with Section 3.04.140.E.3 of the Livonia Code of Ordinances, as amended since no advantage to the City would result from competitive bidding.

ATTACHMENTS

1. Attachment I - Water Rate Ordinances 2025-26
2. Attachment II - Cash Flow 2025-26

3. Attachment III - Combined Statement of Rev and Exp 2025-26
4. W&S Board Res #6809 - Water Rate Increase 2025-2026
5. Ltr to Water Board - Water Rates 2025-2026

APPROVED BY

Date: May 14, 2025

Don Rohraff, Director of Public Works

Date: May 14, 2025

Connie Kumpula, Chief Accountant

Date: May 14, 2025

Carter Fisher, City Attorney

Date: May 15, 2025

Maureen Miller Brosnan, Mayor

LETTER TO THE LIVONIA CITY COUNCIL

21.

Law
May 20, 2025

MEETING DATE	PRESENTED BY
R060225	Carter Fisher, City Attorney

AGENDA ITEM

PROPOSED AMENDMENT TO THE LIVONIA CODE OF ORDINANCE, AS AMENDED: Department of Law, re: to Section 050 of Title 13, Chapter 08 (Water Service Rates and Revenues) to provide changes in the water service consumption rates to become effective with the first billing on or after July 1, 2025.

BACKGROUND DETAILS

PREFERRED COUNCIL RECOMMENDATION/RESOLUTION (Please complete this field. Attachments are not to be used in lieu of the recommendation)

FIRST READ

ATTACHMENTS

1. 13.08.050 - 2025
2. S051925 LTC water and sewer rates

APPROVED BY

Carter Fisher, City Attorney — Date: May 20, 2025

Maureen Miller Brosnan, Mayor — Date: May 22, 2025

AN ORDINANCE AMENDING SECTION 050 OF TITLE 13, CHAPTER 08 (WATER SERVICE RATES AND REVENUES) OF THE LIVONIA CODE OF ORDINANCES, AS AMENDED.

THE CITY OF LIVONIA ORDAINS:

Section 1. Section 050 of Title 13, Chapter 08 the Livonia Code of Ordinances, as amended, is hereby amended to read as follows:

13.08.050 Fixed rates. A. In addition to the charge for water usage, effective with the first billing on and after July 1, 202~~4~~5, there will be a fixed quarterly charge, determined by meter size, as follows:

METER SIZE	QUARTERLY CHARGE
5/8 Inch	$ 2~~6.81~~8.05
3/4 Inch	$ 2~~6.81~~8.05
1 Inch	$ 2~~6.81~~8.05
1 1/2” Meter	$ 8~~0.36~~4.10
2” Meter	$ 10~~3.14~~7.94
3” Meter	$ 1~~35.53~~41.83
4” Meter	$ 2~~07.09~~16.72
6” Meter	$ 5~~51.70~~77.37
8” Meter	$ 1,~~562.74~~635.46
10” Meter	$ 4,~~504.72~~714.35

B. Seasonal Flat rate Water, per quarter $ ~~98.21~~106.25.

Section 2. All ordinances or parts of ordinances in conflict herewith are hereby repealed only to the extent necessary to give this ordinance full force and effect.

Section 3. Should any portion of this ordinance be held invalid for any reason, such holding shall not be construed as affecting the validity of any of the remaining portions of this ordinance.

_____

LETTER TO THE LIVONIA CITY COUNCIL

21.

DPW
May 7, 2025

MEETING DATE	PRESENTED BY
S051925/R060225/R061625	Ryan Ferrell, Assistant Director of Public Works

AGENDA ITEM

REQUEST TO ADJUST WATER AND SEWER CONSUMPTION RATES, INDUSTRIAL SURCHARGE RATE AND INDUSTRIAL WASTE CONTROL CHARGE: Public Works Division, re: to become effective on July 1, 2025.

BACKGROUND DETAILS

Livonia's Department of Public Works and Finance Department have worked together on the water and sewer rates proposed for implementation on July 1, 2025. In calculating the new rates, a review was made to determine how the fiscal year 2024 rates performed in conjunction with the budget, along with an analysis of the effects of the proposed new rates on our low-, average- and high-volume water users.

Incorporating the increase in wholesale charges from the Great Lakes Water Authority and an expected reduction in water sales charges, the recommended new rates will impact customers in the following manner:

1. The proposed water and sewer rate increase is 5.76 percent (5.76%) this year for the average residential user, which is an increase of $12.00 per quarter. Average use is based on consumption of 20 units (2,000 cubic feet) per quarter, which is 15,000 gallons of water.
2. The rate increase is mainly due to a pass-through of the changes to the water charges from our wholesale provider coupled with an anticipated decrease in water sales. Overall, GLWA increased its wholesale rate by 5.69%.
3. City of Livonia users still pay less for water than users in most surrounding communities pay for an equal amount of water.
4. The new rates will be in effect from July 1, 2025, through June 30, 2026.

Additional detailed information is included in the attached letter to the Water and Sewer Board.

At a meeting of the Water and Sewer Board of the City of Livonia, the following resolution was adopted:

#WS 6809 05/25 RESOLVED that the Water and Sewer Board will request City Council at their May 19, 2025, meeting to approve the new water and sewer rate effective July 1, 2025, of $7.53 per unit. The Board recommends that Council proceed by approving amendments to the Water and Sewer

Ordinance.

PREFERRED COUNCIL RECOMMENDATION/RESOLUTION (Please complete this field. Attachments are not to be used in lieu of the recommendation)

The Department of Public Works requests Council approve the PROPOSED AMENDMENT TO THE LIVONIA CODE OF ORDINANCE, AS AMENDED: Department of Law, re: to Section 040 of Title 13, Chapter 08 (Water Services Rates and Revenues) to provide for changes in the water service consumption rates to become effective with the first billing on or after July 1, 2024.

	Old Rate 2024	**To New Rate 2025**
Water Billing per unit	$3.57	$3.91
Sewer Billing per unit	$3.35	$3.62
Total Per Unit	**$6.92**	**$7.53**

Individual Ordinance revisions are attached.

SPECIFIC NAME OF PRODUCT AND NUMBER TO BE PURCHASED (if more than one)

Water & Sewer services

CONTRACT: Amount and/or purchase price and length of contract (with dates if applicable)

n/a

DETAILED WORK BEING PERFORMED

n/a

FISCAL CONSIDERATIONS (Amount requested and Account(s) used. If applicable, Grant Funding information)

n/a

ACCEPTANCE OF BID (Please detail the following: Why accepted, why not lowest bidder, company name, contact person, full address)

n/a

REASON TO WAIVE BID PROCESS (Emergency, Professional services, No advantage to City and why, Consortium package, etc): Waive the formal bidding process in accordance with Section 3.04.140.E.3 of the Livonia Code of Ordinances, as amended since no advantage to the City would result from competitive bidding.

ATTACHMENTS

1. Attachment I - Water Rate Ordinances 2025-26
2. Attachment II - Cash Flow 2025-26

3. Attachment III - Combined Statement of Rev and Exp 2025-26
4. W&S Board Res #6809 - Water Rate Increase 2025-2026
5. Ltr to Water Board - Water Rates 2025-2026

APPROVED BY

Date: May 14, 2025

Don Rohraff, Director of Public Works

Date: May 14, 2025

Connie Kumpula, Chief Accountant

Date: May 14, 2025

Carter Fisher, City Attorney

Date: May 15, 2025

Maureen Miller Brosnan, Mayor

LETTER TO THE LIVONIA CITY COUNCIL

22.

Law
May 20, 2025

MEETING DATE	PRESENTED BY
R060225	Carter Fisher, City Attorney

AGENDA ITEM

PROPOSED AMENDMENT TO THE LIVONIA CODE OF ORDINANCE, AS AMENDED: Department of Law, re: to Section 050 of Title 13, Chapter 28 (Industrial Waste Surcharge) to provide for changes in the industrial waste surcharge rate to become effective with the first billing on or after July 1, 2025.

BACKGROUND DETAILS

At your study meeting of May 19, 2025, you referred the preparation of an ordinance amendment to Section 13.28.050 of the Livonia Code of Ordinances, to the Department of Law for submission to Council. This ordinance amendment reflects the requested changes to the rates for users of the wastewater system of the City of Livonia.

Accordingly, this proposed amendment is hereby submitted for your consideration and possible adoption.

PREFERRED COUNCIL RECOMMENDATION/RESOLUTION (Please complete this field. Attachments are not to be used in lieu of the recommendation)

First Read

ATTACHMENTS

1. 13.28.050 - 2025
2. S051925 LTC water and sewer rates

APPROVED BY

Carter Fisher, City Attorney — Date: May 20, 2025

Maureen Miller Brosnan, Mayor — Date: May 22, 2025

AN ORDINANCE AMENDING SECTION 050 OF TITLE 13, CHAPTER 28 (INDUSTRIAL WASTE SURCHARGE) OF THE LIVONIA CODE OF ORDINANCES, AS AMENDED.

THE CITY OF LIVONIA ORDAINS:

Section 1. Section 050 of Title 13, Chapter 28 the Livonia Code of Ordinances, as amended, is hereby amended to read as follows:

13.28.050 Schedule of charges. Industrial waste pollutant strength surcharges are adopted herein, made effective with the first billing on and after July 1, 2024~~4~~5, for users of the wastewater system of the City of Livonia, and are to be computed as follows:

Computation of Industrial Waste Pollutant Strength Surcharge

The industrial waste pollutant strength surcharge shall be computed in accordance with the following formula:

SC = 0.0624 V [a (BOD-275) + b (TSS-350) + c (P-12) + d (FOG-100)]

Where:

SC	=	Pollutant strength surcharge fee in dollars for the billing period.
V	=	Volume of waste discharged in the billing period in Mcf (1,000 cubic feet).
BOD	=	Five-day biochemical oxygen demand of the waste expressed in milligrams per liter (ppm).
TSS	=	Total suspended solids in the waste expressed in milligrams per liter (ppm).
P	=	Phosphorus in the waste expressed in milligrams per liter (ppm).
FOG	=	Fats, oils, and grease in the waste expressed in milligrams per liter (ppm).

a, b, c, d	=	Surcharge rates in dollars/pound for treating BOD, TSS, P and FOG, respectively.
0.624	=	Factor which converts Mcf to MM lbs.
a	=	dollars/pound for treating BOD = $ 0.~~392~~409/pound greater than 275 mg/l.
b	=	dollars/pound for treating TSS = $ 0.5~~25~~48/pound greater than 350 mg/l.
c	=	dollars/pound for treating P = $ 7.~~571~~907/pound greater than 12 mg/l.
d	=	dollars/pound for treating FOG = $ 0.1~~25~~31/pound greater than 100 mg/l.

Section 2. All ordinances or parts of ordinances in conflict herewith are hereby repealed only to the extent necessary to give this ordinance full force and effect.

Section 3. Should any portion of this ordinance be held invalid for any reason, such holding shall not be construed as affecting the validity of any of the remaining portions of this ordinance.

_____

LETTER TO THE LIVONIA CITY COUNCIL

21.

DPW
May 7, 2025

MEETING DATE	PRESENTED BY
S051925/R060225/R061625	Ryan Ferrell, Assistant Director of Public Works

AGENDA ITEM

REQUEST TO ADJUST WATER AND SEWER CONSUMPTION RATES, INDUSTRIAL SURCHARGE RATE AND INDUSTRIAL WASTE CONTROL CHARGE: Public Works Division, re: to become effective on July 1, 2025.

BACKGROUND DETAILS

Livonia's Department of Public Works and Finance Department have worked together on the water and sewer rates proposed for implementation on July 1, 2025. In calculating the new rates, a review was made to determine how the fiscal year 2024 rates performed in conjunction with the budget, along with an analysis of the effects of the proposed new rates on our low-, average- and high-volume water users.

Incorporating the increase in wholesale charges from the Great Lakes Water Authority and an expected reduction in water sales charges, the recommended new rates will impact customers in the following manner:

1. The proposed water and sewer rate increase is 5.76 percent (5.76%) this year for the average residential user, which is an increase of $12.00 per quarter. Average use is based on consumption of 20 units (2,000 cubic feet) per quarter, which is 15,000 gallons of water.
2. The rate increase is mainly due to a pass-through of the changes to the water charges from our wholesale provider coupled with an anticipated decrease in water sales. Overall, GLWA increased its wholesale rate by 5.69%.
3. City of Livonia users still pay less for water than users in most surrounding communities pay for an equal amount of water.
4. The new rates will be in effect from July 1, 2025, through June 30, 2026.

Additional detailed information is included in the attached letter to the Water and Sewer Board.

At a meeting of the Water and Sewer Board of the City of Livonia, the following resolution was adopted:

#WS 6809 05/25 RESOLVED that the Water and Sewer Board will request City Council at their May 19, 2025, meeting to approve the new water and sewer rate effective July 1, 2025, of $7.53 per unit. The Board recommends that Council proceed by approving amendments to the Water and Sewer

Ordinance.

PREFERRED COUNCIL RECOMMENDATION/RESOLUTION (Please complete this field. Attachments are not to be used in lieu of the recommendation)

The Department of Public Works requests Council approve the PROPOSED AMENDMENT TO THE LIVONIA CODE OF ORDINANCE, AS AMENDED: Department of Law, re: to Section 040 of Title 13, Chapter 08 (Water Services Rates and Revenues) to provide for changes in the water service consumption rates to become effective with the first billing on or after July 1, 2024.

	Old Rate 2024	**To New Rate 2025**
Water Billing per unit	$3.57	$3.91
Sewer Billing per unit	$3.35	$3.62
Total Per Unit	**$6.92**	**$7.53**

Individual Ordinance revisions are attached.

SPECIFIC NAME OF PRODUCT AND NUMBER TO BE PURCHASED (if more than one)

Water & Sewer services

CONTRACT: Amount and/or purchase price and length of contract (with dates if applicable)

n/a

DETAILED WORK BEING PERFORMED

n/a

FISCAL CONSIDERATIONS (Amount requested and Account(s) used. If applicable, Grant Funding information)

n/a

ACCEPTANCE OF BID (Please detail the following: Why accepted, why not lowest bidder, company name, contact person, full address)

n/a

REASON TO WAIVE BID PROCESS (Emergency, Professional services, No advantage to City and why, Consortium package, etc): Waive the formal bidding process in accordance with Section 3.04.140.E.3 of the Livonia Code of Ordinances, as amended since no advantage to the City would result from competitive bidding.

ATTACHMENTS

1. Attachment I - Water Rate Ordinances 2025-26
2. Attachment II - Cash Flow 2025-26

3. Attachment III - Combined Statement of Rev and Exp 2025-26
4. W&S Board Res #6809 - Water Rate Increase 2025-2026
5. Ltr to Water Board - Water Rates 2025-2026

APPROVED BY

Date: May 14, 2025

Don Rohraff, Director of Public Works

Date: May 14, 2025

Connie Kumpula, Chief Accountant

Date: May 14, 2025

Carter Fisher, City Attorney

Date: May 15, 2025

Maureen Miller Brosnan, Mayor

LETTER TO THE LIVONIA CITY COUNCIL

23.

Law
May 20, 2025

MEETING DATE	PRESENTED BY
R060225	Carter Fisher, City Attorney

AGENDA ITEM

PROPOSED AMENDMENT TO THE LIVONIA CODE OF ORDINANCE, AS AMENDED: Department of Law, re: to Section 120 of Title 13, Chapter 20 (Livonia Sewage Disposal System) to provide for changes to the sewer disposal and maintenance rates to become effective with the first billing on or after July 1, 2025.

BACKGROUND DETAILS

At your study meeting of May 19, 2025, you referred the preparation of an ordinance amendment to Section 13.20.120 of the Livonia Code of Ordinances, to the Department of Law for submission to Council. This ordinance amendment reflects the requested changes to the disposal and maintenance sewer rates.

Accordingly, this proposed amendment is hereby submitted for your consideration and possible adoption.

PREFERRED COUNCIL RECOMMENDATION/RESOLUTION (Please complete this field. Attachments are not to be used in lieu of the recommendation)

FIRST READ

ATTACHMENTS

1. 13.20.120 - 2025
2. S051925 LTC water and sewer rates

APPROVED BY

Carter Fisher, City Attorney — Date: May 20, 2025

Maureen Miller Brosnan, Mayor — Date: May 22, 2025

AN ORDINANCE AMENDING SECTION 120 OF TITLE 13, CHAPTER 20 (LIVONIA SEWAGE DISPOSAL SYSTEM) OF THE LIVONIA CODE OF ORDINANCES, AS AMENDED.

THE CITY OF LIVONIA ORDAINS:

Section 1. Section 120 of Title 13, Chapter 20 the Livonia Code of Ordinances, as amended, is hereby amended to read as follows:

13.20.120 Disposal and maintenance rates (sewer). A. Effective with the first billing on and after July 1, 2024~~4~~5, the fixed quarterly charge for sewage system maintenance, determined by water meter size, shall be as follows:

METER SIZE	QUARTERLY CHARGE
5/8 Inch	$ 4~~6.44~~5.20
3/4 Inch	$ 4~~6.44~~5.20
1 Inch	$ 4~~6.44~~5.20
1 1/2" Meter	$ 13~~9.22~~5.48
2" Meter	$ 17~~8.70~~3.90
3" Meter	$ 2~~34.80~~28.50
4" Meter	$ 3~~58.79~~49.15
6" Meter	$ 9~~55.84~~30.17
8" Meter	$ 2,~~707.53~~634.81
10" Meter	$ 7,~~804.67~~595.04

B. 1. In addition to the fixed quarterly maintenance charge, effective with the first billing on and after July 1, 2024~~4~~5, there will be a charge for sewage system use, which shall be assessed at the following rates:

Base Charge	
Wayne County per 100 cubic feet of water used	$ 2.~~30~~56
City of Livonia per 100 cubic feet of water used	$ 1.0~~5~~6
Base Charge per 100 cubic feet of water used	$ 3.~~35~~62
Large User (meters sizes 1.5 inch or larger)	
Charge per 100 cubic feet of water used	$ 2.~~15~~25
Total Charge for Large Users per 100 cubic feet of water used	$ 5.~~50~~87

2. For each dwelling unit with an unmetered water supply, there shall be a flat quarterly sewage system charge of: $ 11~~3.44~~7.60

3. Users other than single-family and two-family residential shall be subject to monthly Industrial Waste Control Meter Charges, determined by meter size, in the following amounts:

METER SIZE	MONTHLY INDUSTRIAL WASTE CONTROL CHARGE
5/8 Inch	$ 3.~~72~~89
3/4 Inch	$ 5.~~58~~84
1 Inch	$ 9.~~30~~73
1 1/2" Meter	$ 2~~0.46~~1.40
2" Meter	$ ~~29.76~~31.12
3" Meter	$ 5~~3.94~~6.41
4" Meter	$ 7~~4.40~~7.80
6" Meter	$ 11~~1.60~~6.70
8" Meter	$ 1~~86.00~~94.50
10" Meter	$ 2~~60.40~~72.30
12" Meter	$ ~~297.60~~311.20
14" Meter	$ 3~~72.00~~89.00
16" Meter	$ 4~~46.40~~66.80
18" Meter	$ 5~~20.80~~44.60
20" Meter	$ ~~595.20~~622.40
24" Meter	$ ~~669.60~~700.20
30" Meter	$ 7~~44.00~~78.00

Section 2. All ordinances or parts of ordinances in conflict herewith are hereby repealed only to the extent necessary to give this ordinance full force and effect.

Section 3. Should any portion of this ordinance be held invalid for any reason, such holding shall not be construed as affecting the validity of any of the remaining portions of this ordinance.

_____

LETTER TO THE LIVONIA CITY COUNCIL

21.

DPW
May 7, 2025

MEETING DATE	PRESENTED BY
S051925/R060225/R061625	Ryan Ferrell, Assistant Director of Public Works

AGENDA ITEM

REQUEST TO ADJUST WATER AND SEWER CONSUMPTION RATES, INDUSTRIAL SURCHARGE RATE AND INDUSTRIAL WASTE CONTROL CHARGE: Public Works Division, re: to become effective on July 1, 2025.

BACKGROUND DETAILS

Livonia's Department of Public Works and Finance Department have worked together on the water and sewer rates proposed for implementation on July 1, 2025. In calculating the new rates, a review was made to determine how the fiscal year 2024 rates performed in conjunction with the budget, along with an analysis of the effects of the proposed new rates on our low-, average- and high-volume water users.

Incorporating the increase in wholesale charges from the Great Lakes Water Authority and an expected reduction in water sales charges, the recommended new rates will impact customers in the following manner:

1. The proposed water and sewer rate increase is 5.76 percent (5.76%) this year for the average residential user, which is an increase of $12.00 per quarter. Average use is based on consumption of 20 units (2,000 cubic feet) per quarter, which is 15,000 gallons of water.
2. The rate increase is mainly due to a pass-through of the changes to the water charges from our wholesale provider coupled with an anticipated decrease in water sales. Overall, GLWA increased its wholesale rate by 5.69%.
3. City of Livonia users still pay less for water than users in most surrounding communities pay for an equal amount of water.
4. The new rates will be in effect from July 1, 2025, through June 30, 2026.

Additional detailed information is included in the attached letter to the Water and Sewer Board.

At a meeting of the Water and Sewer Board of the City of Livonia, the following resolution was adopted:

#WS 6809 05/25 RESOLVED that the Water and Sewer Board will request City Council at their May 19, 2025, meeting to approve the new water and sewer rate effective July 1, 2025, of $7.53 per unit. The Board recommends that Council proceed by approving amendments to the Water and Sewer

Ordinance.

PREFERRED COUNCIL RECOMMENDATION/RESOLUTION (Please complete this field. Attachments are not to be used in lieu of the recommendation)

The Department of Public Works requests Council approve the PROPOSED AMENDMENT TO THE LIVONIA CODE OF ORDINANCE, AS AMENDED: Department of Law, re: to Section 040 of Title 13, Chapter 08 (Water Services Rates and Revenues) to provide for changes in the water service consumption rates to become effective with the first billing on or after July 1, 2024.

	Old Rate 2024	**To New Rate 2025**
Water Billing per unit	$3.57	$3.91
Sewer Billing per unit	$3.35	$3.62
Total Per Unit	**$6.92**	**$7.53**

Individual Ordinance revisions are attached.

SPECIFIC NAME OF PRODUCT AND NUMBER TO BE PURCHASED (if more than one)

Water & Sewer services

CONTRACT: Amount and/or purchase price and length of contract (with dates if applicable)

n/a

DETAILED WORK BEING PERFORMED

n/a

FISCAL CONSIDERATIONS (Amount requested and Account(s) used. If applicable, Grant Funding information)

n/a

ACCEPTANCE OF BID (Please detail the following: Why accepted, why not lowest bidder, company name, contact person, full address)

n/a

REASON TO WAIVE BID PROCESS (Emergency, Professional services, No advantage to City and why, Consortium package, etc): Waive the formal bidding process in accordance with Section 3.04.140.E.3 of the Livonia Code of Ordinances, as amended since no advantage to the City would result from competitive bidding.

ATTACHMENTS

1. Attachment I - Water Rate Ordinances 2025-26
2. Attachment II - Cash Flow 2025-26

3. Attachment III - Combined Statement of Rev and Exp 2025-26
4. W&S Board Res #6809 - Water Rate Increase 2025-2026
5. Ltr to Water Board - Water Rates 2025-2026

APPROVED BY

Date: May 14, 2025

Don Rohraff, Director of Public Works

Date: May 14, 2025

Connie Kumpula, Chief Accountant

Date: May 14, 2025

Carter Fisher, City Attorney

Date: May 15, 2025

Maureen Miller Brosnan, Mayor

LETTER TO THE LIVONIA CITY COUNCIL

24.

Law
May 20, 2025

MEETING DATE	PRESENTED BY
R060225	Carter Fisher, City Attorney

AGENDA ITEM

PROPOSED AMENDMENT TO THE LIVONIA CODE OF ORDINANCE, AS AMENDED: Department of Law, re: Section 130 of Title 13, Chapter 20 (Livonia Sewage Disposal System) to provide for changes to the special rates for designated uses to become effective with the first billing on or after July 1, 2025.

BACKGROUND DETAILS

At your study meeting of May 19, 2025, you referred the preparation of an ordinance amendment to Section 13.20.130 of the Livonia Code of Ordinances, to the Department of Law for submission to Council. This ordinance amendment reflects the requested changes to the sewage disposal rate for designated users.

Accordingly, this proposed amendment is hereby submitted for your consideration and possible adoption.

PREFERRED COUNCIL RECOMMENDATION/RESOLUTION (Please complete this field. Attachments are not to be used in lieu of the recommendation)

FIRST READ

ATTACHMENTS

1. 13.20.130 - 2025
2. S051925 LTC water and sewer rates

APPROVED BY

Carter Fisher, City Attorney — Date: May 20, 2025

Maureen Miller Brosnan, Mayor — Date: May 22, 2025

AN ORDINANCE AMENDING SECTION 130 OF TITLE 13, CHAPTER 20 (LIVONIA SEWAGE DISPOSAL SYSTEM) OF THE LIVONIA CODE OF ORDINANCES, AS AMENDED.

THE CITY OF LIVONIA ORDAINS:

Section 1. Section 130 of Title 13, Chapter 20 the Livonia Code of Ordinances, as amended, is hereby amended to read as follows:

13.20.130 Special rates—For designated uses. A. Effective with the first billing on and after July 1, 2024~~4~~5, where sewage disposal service is furnished to users not situated within the city, the sewage disposal rate for such users shall be as follows:

1. For all unmetered houses or residential dwellings connected to and using the facilities of the sewage disposal system, such rate shall be a flat rate of one hundred ~~thirteen~~ seventeen dollars and ~~forty-four~~ sixty cents ($11~~3.44~~7.60) per quarter.

2. For all customers connected to and using the facilities of the sewage disposal system for which consumption data may be obtained, such rate shall be equal to the appropriate base rate established in 13.20.120(B)(1), plus the appropriate quarterly fixed charge as determined by meter size established in 13.20.120(A).

B. All seasonal users with kitchen or bathroom facilities shall pay 50% of the current per unit sewage charge, i.e.:

Base Charge	
Wayne County per 100 cubic feet	$ 1.~~15~~28
City of Livonia per 100 cubic feet	$ 0.53
Base Charge per 100 cubic feet	$ 1.~~68~~81
Large User (meters sizes 1.5 inch or larger)	
Charge per 100 cubic feet	$ 1.~~08~~13
Total Base Charge for Large Users per 100 cubic feet of water used	$ 2.~~76~~94

C. The above rates do not include any rates imposed by the county for the treatment and disposal of sewage through its sewage treatment and disposal facilities. Any such rate shall be included and specified as a separate item in bills sent to users as hereinafter provided.

Section 2. All ordinances or parts of ordinances in conflict herewith are hereby repealed only to the extent necessary to give this ordinance full force and effect.

Section 3. Should any portion of this ordinance be held invalid for any reason, such holding shall not be construed as affecting the validity of any of the remaining portions of this ordinance.

_____

LETTER TO THE LIVONIA CITY COUNCIL

21.

DPW
May 7, 2025

MEETING DATE	PRESENTED BY
S051925/R060225/R061625	Ryan Ferrell, Assistant Director of Public Works

AGENDA ITEM

REQUEST TO ADJUST WATER AND SEWER CONSUMPTION RATES, INDUSTRIAL SURCHARGE RATE AND INDUSTRIAL WASTE CONTROL CHARGE: Public Works Division, re: to become effective on July 1, 2025.

BACKGROUND DETAILS

Livonia's Department of Public Works and Finance Department have worked together on the water and sewer rates proposed for implementation on July 1, 2025. In calculating the new rates, a review was made to determine how the fiscal year 2024 rates performed in conjunction with the budget, along with an analysis of the effects of the proposed new rates on our low-, average- and high-volume water users.

Incorporating the increase in wholesale charges from the Great Lakes Water Authority and an expected reduction in water sales charges, the recommended new rates will impact customers in the following manner:

1. The proposed water and sewer rate increase is 5.76 percent (5.76%) this year for the average residential user, which is an increase of $12.00 per quarter. Average use is based on consumption of 20 units (2,000 cubic feet) per quarter, which is 15,000 gallons of water.
2. The rate increase is mainly due to a pass-through of the changes to the water charges from our wholesale provider coupled with an anticipated decrease in water sales. Overall, GLWA increased its wholesale rate by 5.69%.
3. City of Livonia users still pay less for water than users in most surrounding communities pay for an equal amount of water.
4. The new rates will be in effect from July 1, 2025, through June 30, 2026.

Additional detailed information is included in the attached letter to the Water and Sewer Board.

At a meeting of the Water and Sewer Board of the City of Livonia, the following resolution was adopted:

#WS 6809 05/25 RESOLVED that the Water and Sewer Board will request City Council at their May 19, 2025, meeting to approve the new water and sewer rate effective July 1, 2025, of $7.53 per unit. The Board recommends that Council proceed by approving amendments to the Water and Sewer

Ordinance.

PREFERRED COUNCIL RECOMMENDATION/RESOLUTION (Please complete this field. Attachments are not to be used in lieu of the recommendation)

The Department of Public Works requests Council approve the PROPOSED AMENDMENT TO THE LIVONIA CODE OF ORDINANCE, AS AMENDED: Department of Law, re: to Section 040 of Title 13, Chapter 08 (Water Services Rates and Revenues) to provide for changes in the water service consumption rates to become effective with the first billing on or after July 1, 2024.

	Old Rate 2024	**To New Rate 2025**
Water Billing per unit	$3.57	$3.91
Sewer Billing per unit	$3.35	$3.62
Total Per Unit	**$6.92**	**$7.53**

Individual Ordinance revisions are attached.

SPECIFIC NAME OF PRODUCT AND NUMBER TO BE PURCHASED (if more than one)

Water & Sewer services

CONTRACT: Amount and/or purchase price and length of contract (with dates if applicable)

n/a

DETAILED WORK BEING PERFORMED

n/a

FISCAL CONSIDERATIONS (Amount requested and Account(s) used. If applicable, Grant Funding information)

n/a

ACCEPTANCE OF BID (Please detail the following: Why accepted, why not lowest bidder, company name, contact person, full address)

n/a

REASON TO WAIVE BID PROCESS (Emergency, Professional services, No advantage to City and why, Consortium package, etc): Waive the formal bidding process in accordance with Section 3.04.140.E.3 of the Livonia Code of Ordinances, as amended since no advantage to the City would result from competitive bidding.

ATTACHMENTS

1. Attachment I - Water Rate Ordinances 2025-26
2. Attachment II - Cash Flow 2025-26

3. Attachment III - Combined Statement of Rev and Exp 2025-26
4. W&S Board Res #6809 - Water Rate Increase 2025-2026
5. Ltr to Water Board - Water Rates 2025-2026

APPROVED BY

Date: May 14, 2025

Don Rohraff, Director of Public Works

Date: May 14, 2025

Connie Kumpula, Chief Accountant

Date: May 14, 2025

Carter Fisher, City Attorney

Date: May 15, 2025

Maureen Miller Brosnan, Mayor

NEW DATA RECEIVED FOR THE REGULAR MEETING OF MAY 19, 2025

From: Miller, Lori
To: Kasprowicz, Sara
Cc: law-all
Subject: New Data - Regular Meeting 05/19/25 (Item #3)
Date: Monday, May 19, 2025 10:48:45 AM
Attachments: New Data - Item 3 from City Clerk.docx

Good morning, Sara.

Attached please find new data relative to Agenda Item #3 for tonight's Regular Meeting.

Thank you.

Lori Miller, MiPMC Level 2, CMC
City Clerk
City of Livonia | City Clerk
(734) 466-2233
lmiller@livonia.gov

OFFICE OF THE CITY CLERK

LORI L. MILLER
CITY CLERK

DORIS E. DeMARCO
DEPUTY CITY CLERK

33000 CIVIC CENTER DRIVE
LIVONIA, MICHIGAN 48154-3097
(734) 466-2230
FAX: (734) 421-1147

May 19, 2025

Honorable Members of
Livonia City Council

RE: New Data - Regular Meeting of May 19, 2025
Agenda Item #3

Dear City Councilmembers:

Please accept this as new data regarding Agenda Item #3 for the Regular meeting of May 19, 2025. At the Study Meeting held May 7th, Council raised a question regarding the expense of voter ID cards being mailed to the affected voters in the two (2) newly created Precincts involved in this Amendment.

I misunderstood Vice President Ptashnik's question and misspoke. The two (2) affected precincts, Precinct 23 and Precinct 24, have not been mailed new voter ID cards. The Clerk's Office was waiting to resolve the matter in full before sending anything to the residents affected. No additional expense will be involved regarding the Ordinance amendment. Once adopted by Council, the voters in these two (2) precincts will be mailed new voter ID cards.

I apologize for any confusion and thank you for the opportunity to clarify this matter.

Very truly,

Lori L. Miller

Lori L. Miller
City Clerk

ORDINANCE AMENDING SECTIONS 240 AND 250 OF TITLE 1, CHAPTER 08 (ELECTION PRECINCTS) OF THE LIVONIA CODE OF ORDINANCES, AS AMENDED.

THE CITY OF LIVONIA ORDAINS:

Section 1. Section 240 of Title 1, Chapter 08 of the Livonia Code of Ordinances, as amended, is hereby amended to read as follows:

1.08.240 - Precinct 23. ~~Election Precinct 23 shall be that area of the city described as beginning at the intersection of the Jeffries (I-96) Expressway and Merriman Road and proceeding thence south along the centerline of Merriman Road to the centerline of Orangelawn Street; thence west along the centerline of Orangelawn Street to Hubbard Avenue; thence south along the centerline of Hubbard Avenue as extended to the centerline of Joy Road; thence west along the centerline of Joy Road to the centerline of Edward Hines Drive; thence northwest along the centerline of Edward Hines Drive to the centerline of Stark Road; thence north along the centerline of Stark Road to the centerline of Hathaway Avenue; thence east along the centerline of Hathaway Avenue to the centerline of Farmington Road; thence north along the centerline of Farmington Road to the centerline of the Jeffries (I-96) Expressway; thence east along the centerline of the Jeffries (I-96) Expressway to the centerline of Merriman Road and the point of beginning.~~ Election Precinct 23 shall consist of: All that area of the city lying south of the centerline of Jeffries (I-96) Expressway and north of the centerline of Orangelawn Street, between the centerline of Merriman Road on the east and the centerline of Farmington Road on the west.

Section 2. Section 250 of Title 1, Chapter 08 of the Livonia Code of Ordinances, as amended, is hereby amended to read as follows:

1.08.250 - Precinct 24. ~~Election Precinct 24 shall consist of: All that area of the city lying south of the centerline of Plymouth Road and north of the centerline of Hathaway Avenue, between the centerline of Stark Road on the west and the centerline of Farmington Road on the East.~~ Election Precinct 24 shall be that area of the city described as beginning at the intersection of Plymouth Road and Stark Road and proceeding thence east along the centerline of Plymouth Road to the centerline of Farmington Road; thence south along the centerline of Farmington Road to the centerline of Orangelawn Street; thence east along the centerline of Orangelawn Street to the centerline of Hubbard Street; thence south along the centerline of Hubbard Avenue as extended to the centerline of Joy Road; thence west along the center line of Joy road to the centerline of Edward Hines Drive;

thence northwest along the centerline of Edward Hines Drive to the centerline of Stark Road; thence north along the centerline of Stark Road and the point of beginning.

Section 3. Should any portion of this ordinance be held invalid for any reason, such holding shall not be construed as affecting the validity of any of the remaining portions of this ordinance.

Section 4. This ordinance is hereby declared to be an emergency ordinance necessary for the protection of the public health, safety and welfare and shall take effect immediately upon publication.

CITY OF LIVONIA – CITY COUNCIL
MINUTES OF STUDY MEETING HELD MAY 7, 2025

Meeting was called to order at 8:00 p.m. by Council President McCullough. Present: Vice President Martha Ptashnik, Carrie Budzinski, Lynda Scheel, Scott Morgan, Laura Toy, Rob Donovic, and President Brandon McCullough. Absent: None.

Elected and appointed officials present: Carter Fisher, City Attorney; Mark Taormina, City Planner and Economic Development Director; and Lori L. Miller, City Clerk.

Councilmember Vice President Ptashnik led the meeting with the Pledge of Allegiance.

5. PROPOSED AMENDMENT TO THE LIVONIA CODE OF ORDINANCES, AS AMENDED: Office of the City Clerk, re: to revise Sections to Title 1, Chapter 1.08 (Election Precincts) to maintain ballot alignment within previously consolidated precincts.

Lori Miller, City Clerk, presented the item to Council. Ms. Miller stated the Clerk's Office sought Council's approval earlier this year to approve an ambitious and aggressive plan to consolidate precincts from 44 to 26 which required modification to the City's Ordinance. Following the submission of documentation to the State of Michigan, Ms. Miller was informed the consolidation created what is known as a "split precinct", a precinct that would have two (2) separate ballots for voters. Ms. Miller stated this was done inadvertently and would create a nightmare for administrating an election and would be very confusing and hard on our voters.

Ms. Miller indicated the State offered her the opportunity to correct the problem or leave it as it stood. The change could be made easily by moving a section of the newly created Precinct 23 into the newly created Precinct 24. Ms. Miller stated the Election Commission met on April 7th to discuss how to proceed and voted unanimously to make the adjustment as proposed by the State, so a split precinct was not created. Ms. Miller stated it would impact a small number of voters, all involved would continue to vote where they originally voted before the consolidation in March and where they were slated to vote once the consolidation was approved in March. Ms. Miller stated although the polling location would not change, the voters would receive new voter ID cards with the changed precinct number, and this would be to clean up the problem that was created.

Vice President Ptashnik inquired if all new voter cards would be mailed to these voters. Ms. Miller responded in the affirmative. Vice President Ptashnik inquired approximately how many, and Ms. Miller responded a very small number of residents.

Motion was made by Councilmember Budzinski to put the matter on the Regular portion of the next Regular Agenda.

DIRECTION: APPROVING REGULAR

THIS ITEM WILL BE PLACED ON THE CONSENT AGENDA AS A REFER TO LAW sk

LETTER TO THE LIVONIA CITY COUNCIL

5.

Clerk
April 7, 2025

MEETING DATE	PRESENTED BY
S050725/R01925	Lori Miller, MiPMC Level 2, CMC, City Clerk

AGENDA ITEM

PROPOSED AMENDMENT TO THE LIVONIA CODE OF ORDINANCES, AS AMENDED: Office of the City Clerk, re: to revise Sections to Title 1, Chapter 1.08 (Election Precincts) to maintain ballot alignment within previously consolidated precincts.

BACKGROUND DETAILS

At the Council Regular meeting of March 10, 2025, the Council approved the precinct consolidation as submitted by the Office of the City Clerk and adopted a new City Ordinance (Title 1, Chapter 1.08 - Election Precincts.) The information was submitted to the State Bureau of Elections for review. During the review process by the State of Michigan, it was discovered one of the newly created precincts was not in ballot alignment and created a split precinct. This could be left as submitted but would create an undue hardship and expense for ballot administration and create confusion for both precinct workers and voters. The proposed solution to remedy the situation is to adjust two of the approved consolidated precincts, shifting what was previously Precinct 34B to be included in the newly created Precinct 24 rather than including it in the newly created Precinct 23. This will aslo be of less impact to Livonia voters.

The Election Commission met on Monday, April 7, 2025, to discuss the proposed changes to bring the precincts into ballot alignment and voted unanimously to make necessary adjustments to the two originally adopted precincts at the March 10th Council Regular Meeting. A revised map is attached for reference, as well as the precinct map adopted in the original consolidation plan.

PREFERRED COUNCIL RECOMMENDATION/RESOLUTION (Please complete this field. Attachments are not to be used in lieu of the recommendation)

Refer to the Law Department for preparation of new Ordinance with the changes as submitted relative to newly consolidated Precinct 23 and Precinct 24.

ATTACHMENTS

1. S050725 LTC Prop Amend Precinct consolidation revision
2. 050725, Precinct 23 and 24 Revised April 2025

APPROVED BY

Lori Miller, MiPMC Level 2, CMC, City Clerk

Date: April 10, 2025

Carter Fisher, City Attorney

Date: April 10, 2025

Maureen Miller Brosnan, Mayor

Date: April 11, 2025

April 4, 2025, Update

Please see the changes below. New precinct 23 removes old precinct 34B. The old 34B will join the new 24 precinct. This will ensure we do not have a split ballot by aligning the State House, State Senate, US Congressional, and WCCD boundaries.

This change does not affect the location for voting. They all continue to meet at Grant Elementary.

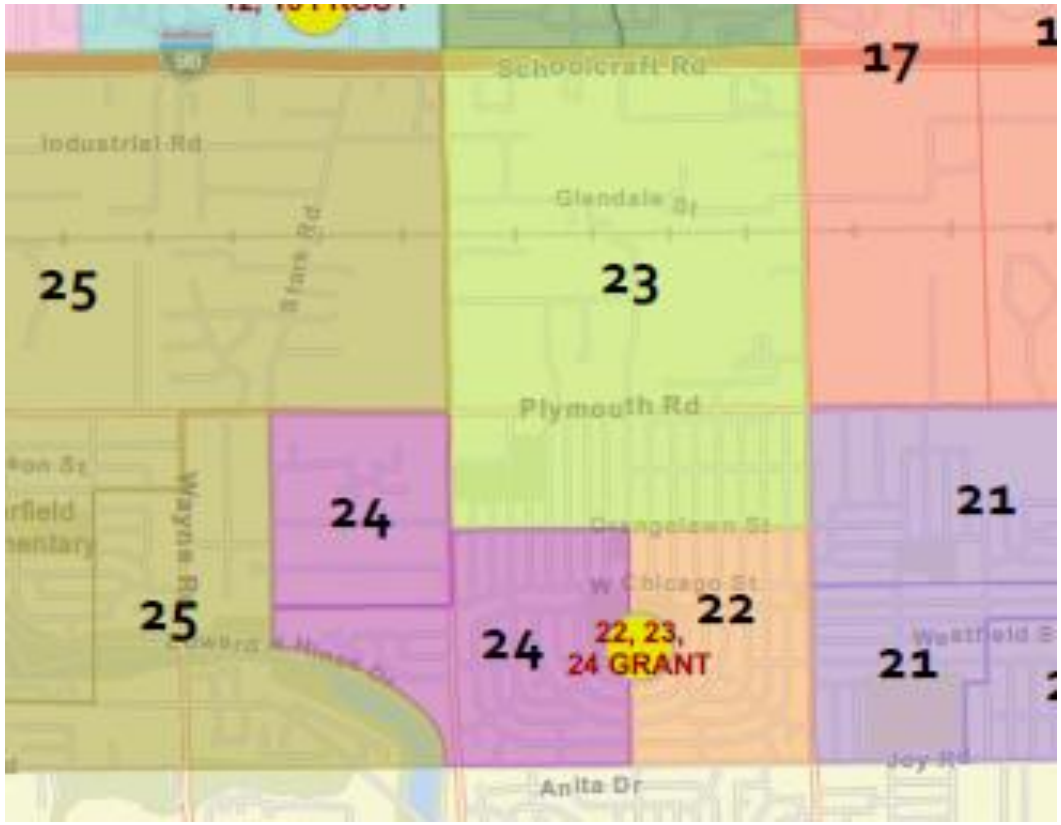

REVISED

April 4, 2025, Updated Precinct Comparison

CURRENT 44 PRECINCTS

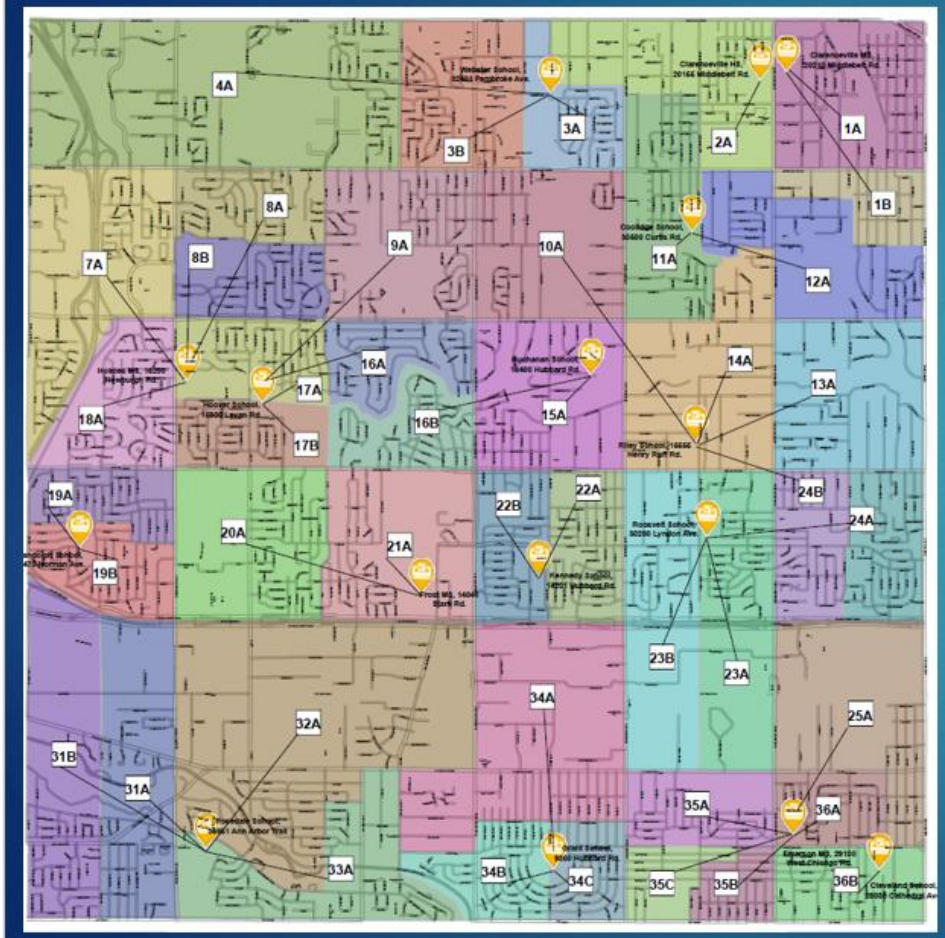

UPDATED 26 CONSOLIDATION

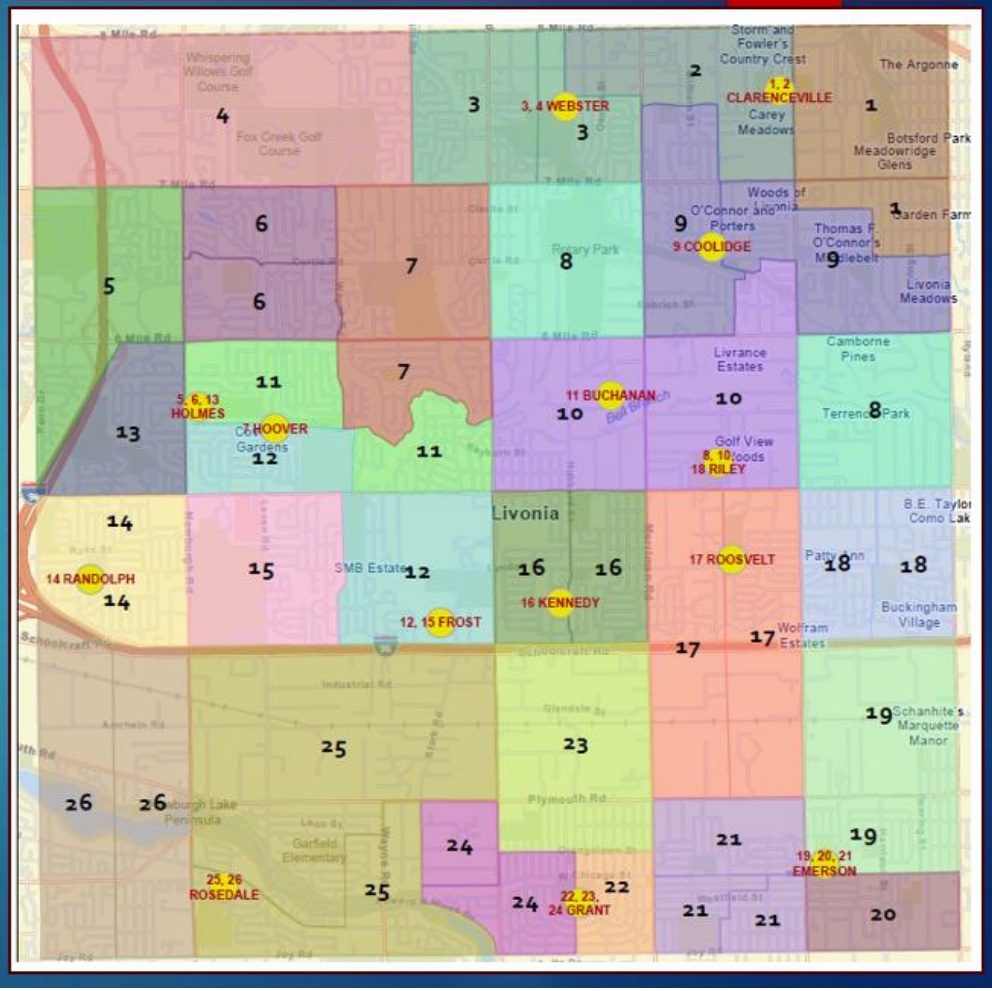

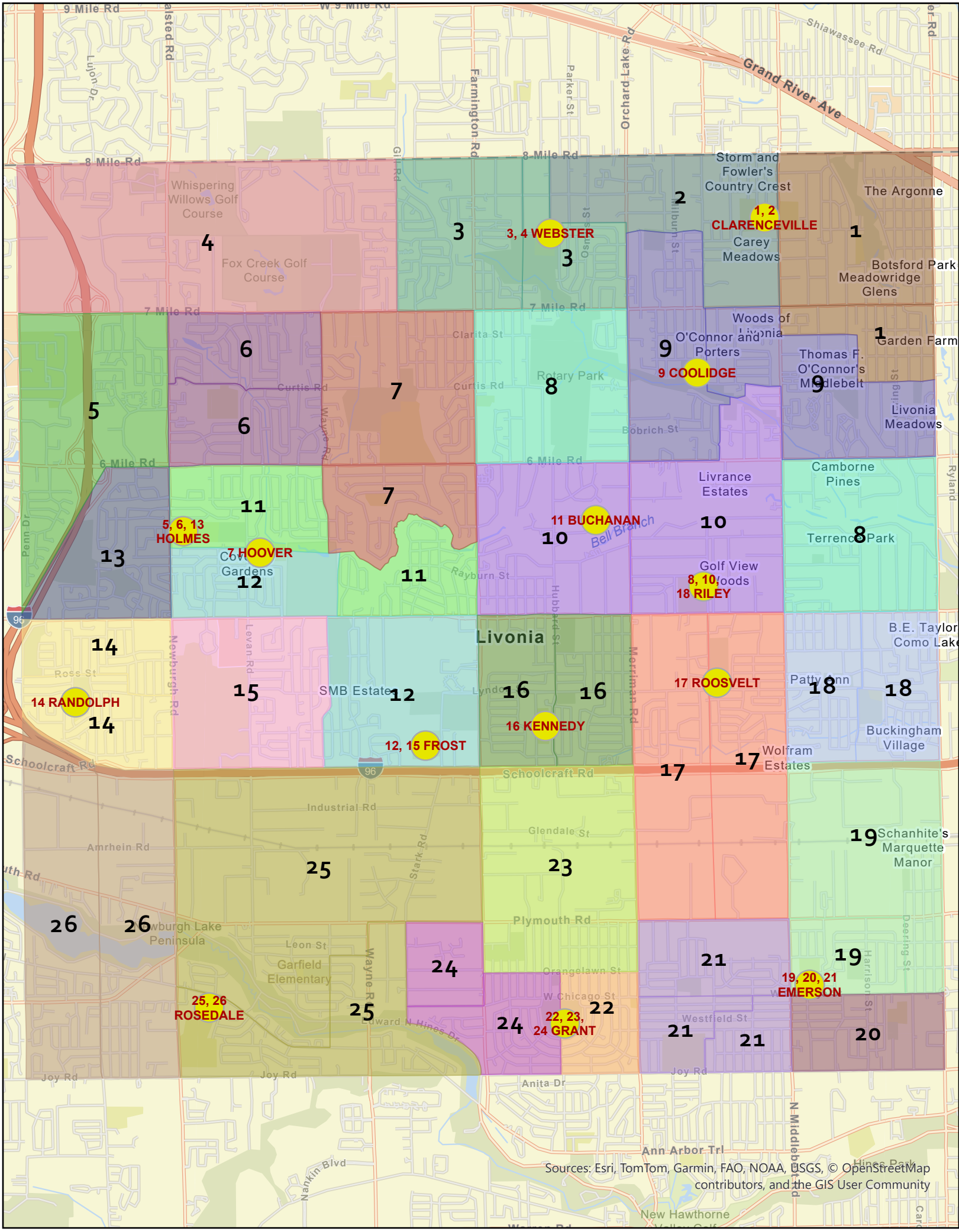
1, 2
CLARENCEVILLE
3, 4 WEBSTER
9 COOLIDGE
11 BUCHANAN
5, 6, 13
HOLMES
7 HOOVER
8, 10,
18 RILEY
14 RANDOLPH
12, 15 FROST
16 KENNEDY
17 ROOSVELT
25, 26
ROSEDALE
22, 23,
24 GRANT
19, 20, 21
EMERSON
Livonia
Storm and Fowler's Country Crest
The Argonne
Carey Meadows
Botsford Park
Meadowridge Glens
Whispering Willows Golf Course
Fox Creek Golf Course
Rotary Park
O'Connor and Porters
Thomas F. O'Connor's Middlebelt
Garden Farm
Livonia Meadows
Livrance Estates
Camborne Pines
Terrence Park
Golf View Woods
Cow Gardens
SMB Estates
B.E. Taylor Como Lake
Patty Lynn
Buckingham Village
Wolfram Estates
Schanhite's Marquette Manor
Garfield Elementary
Newburgh Lake Peninsula
9 Mile Rd
8 Mile Rd
7 Mile Rd
6 Mile Rd
Grand River Ave
Shiawassee Rd
Farmington Rd
Orchard Lake Rd
Parker St
Merriman Rd
Hubbard St
Newburgh Rd
Levan Rd
Schoolcraft Rd
Industrial Rd
Glendale St
Plymouth Rd
Orangelawn St
W Chicago St
Westfield St
Joy Rd
Anita Dr
Ann Arbor Trl
N Middlebelt Rd
Harrison St
Deering St
Stark Rd
Wayne Rd
Leon St
Amrhein Rd
Ross St
Penn Dr
Nankin Blvd
Bell Branch
Sources: Esri, TomTom, Garmin, FAO, NOAA, USGS, © OpenStreetMap contributors, and the GIS User Community

NEW DATA RECEIVED FOR THE
REGULAR MEETING OF JUNE 2, 2025

LEO SOAVE BUILDING COMPANY

37771 Seven Mile Road, Suite C
Livonia MI 48152

Telephone (734) 469 4894 leosoavebuildinginc@gmail.com

Tuesday, May 20, 2025

Dear Honorable Members of the Livonia City Council,

Reference: 37739 Seven Mile Road
Petition 2023-09-01-05

As the current owner of the property at 37739 Seven Mile Road, I am respectfully requesting that the City Council give Second Reading to Petition 2023-09-01-05 and approve the rezoning of the property to C-1, Local Business.

Thank you for considering my request.

Leo Soave

Leo Soave

Councilmember Bahr gave first reading to the following Ordinance:

> AN ORDINANCE AMENDING SECTION 7 OF THE ZONING MAP OF THE CITY OF LIVONIA AND AMENDING ARTICLE III OF LIVONIA ZONING ORDINANCE, AS AMENDED, KNOWN AND CITED AS "THE CITY OF LIVONIA ZONING ORDINANCE" BY ADDING SECTION 3.____ THERETO. (PETITION 2023-09-01-05)

The foregoing Ordinance, when adopted, is filed in the Journal of Ordinances in the Office of the City Clerk and is the same as if word for word repeated herein. The above Ordinance was placed on the table for consideration at an upcoming Regular meeting.

The petitioner spoke about the intentions for Petition No. 2023-09-01-05).

UNFINISHED BUSINESS ITEM 15 (Regular Meeting of December 4, 2023)
FIRST READING GIVEN BY COUNCILMEMBER SCOTT BAHR

Present: **McIntyre, Toy, Bahr, Donovic, Morgan, McCullough, Jolly**
Absent: **None**

LETTER TO THE LIVONIA CITY COUNCIL

15.

Law
October 25, 2023

MEETING DATE	PREPARED BY
PH110823/R120423	Sara Kasprowicz, Council Office Manager,

AGENDA ITEM

PROPOSED AMENDMENT TO THE LIVONIA ZONING ORDINANCES, AS AMENDED: Department of Law, re: Petition 2023-09-01-05 submitted by Matick Construction, L.L.C., requesting to rezone the property at 37739 Seven Mile Road, located on the south side of Seven Mile Road between Blue Skies Drive and Glengarry Drive in the Northeast ¼ of Section 7, from N2 (Neighborhood) to C-1 (Local Business).
Public Hearing held November 8, 2023.

BACKGROUND DETAILS

At your public hearing meeting held on November 8, 2023, you responded to Petition 2023-09-01-05, submitted by Matick Construction, L.L.C., for a change of zoning of the property located on the south side of Seven Mile Road between Blue Skies Drive and Glengarry Drive (37739 Seven Mile Road) in the Northeast 1/4 of Section 7, from N2 (Neighborhood) to C-1 (Local Business).

Accordingly, herewith submitted for your consideration is the proposed ordinance amendment prepared by the Department of Law, together with the map prepared by the Planning Department.

PREFERRED COUNCIL RECOMMENDATION/RESOLUTION (Please complete this field. Attachments are not to be used in lieu of the recommendation)

It is respectfully suggested that the PROPOSED AMENDMENT to the Livonia Zoning Ordinance, as amended: Department of Law, re: Petition 2023-09-01-05 submitted by Matick Construction, L.L.C., with respect to this item, be considered for its FIRST READING in accordance with provisions of law and City Charter.

SPECIFIC NAME OF PRODUCT AND NUMBER TO BE PURCHASED (if more than one)

CONTRACT: Amount and/or purchase price and length of contract (with dates if applicable)

DETAILED WORK BEING PERFORMED

November 8, 2023

FISCAL CONSIDERATIONS (Amount requested and Account(s) used. If applicable, Grant Funding information)

ACCEPTANCE OF BID (Please detail the following: Why accepted, why not lowest bidder, company name, contact person, full address)

REASON TO WAIVE BID PROCESS (Emergency, Professional services, No advantage to City and why, Consortium package, etc):

ATTACHMENTS

1. 2023-09-01-05_1st
2. Proposed Ordinance - Pet. 2023-09-01-05 - Matick Construction
3. PH1110823 Matick Minutes
4. PH110823 LTC 2023-09-01-05, Matick Construction
5. 2023-09-01-05_E-COUNCIL Pkt

APPROVED BY

Date: November 09, 2023

Paul Bernier, City Attorney

Date: November 09, 2023

Maureen Miller Brosnan, Mayor

BOUNDARY OF DISTRICT AS AMENDED FROM N2, NEIGHBORHOOD TO C-1, LOCAL BUSINESS

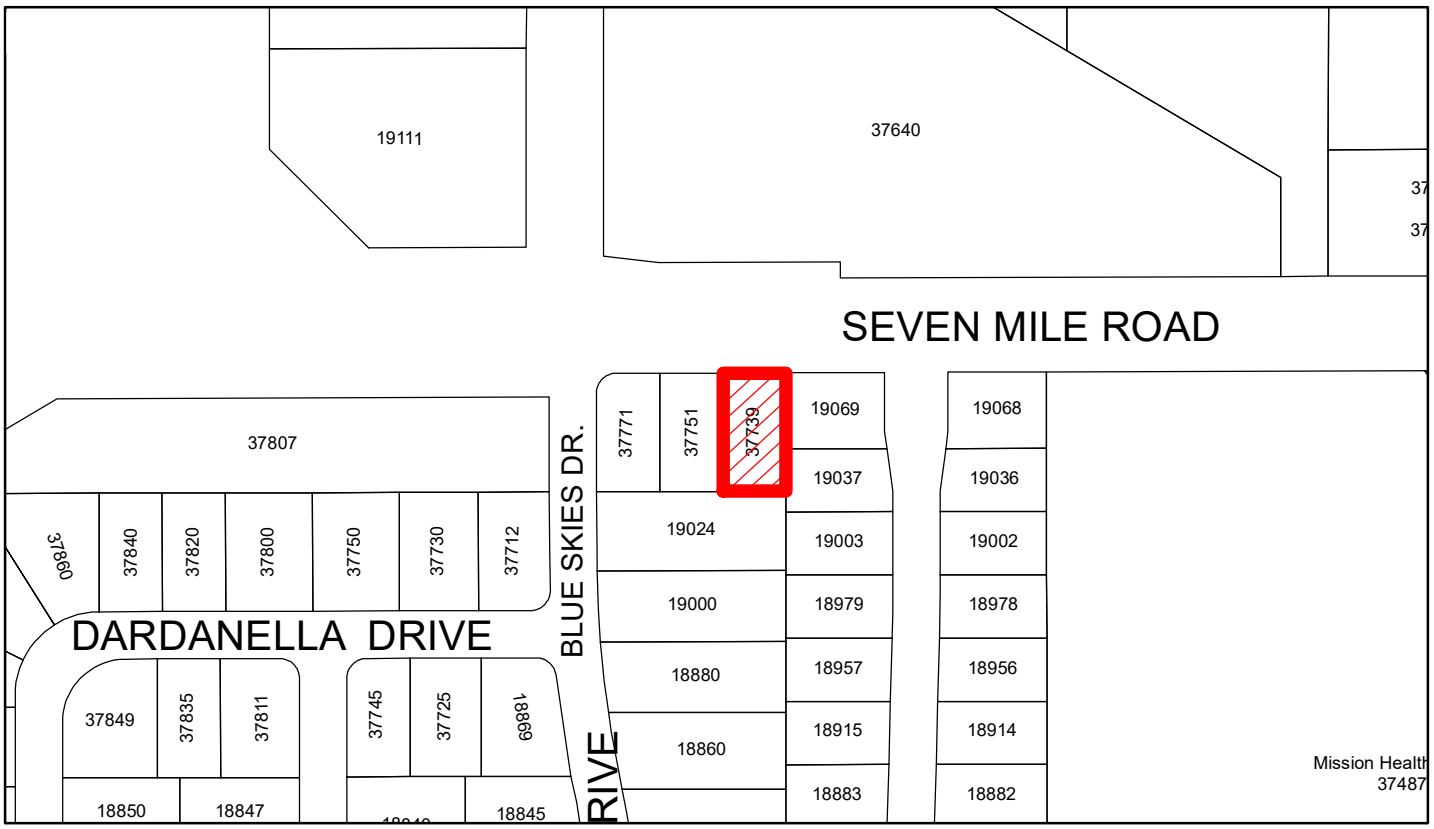

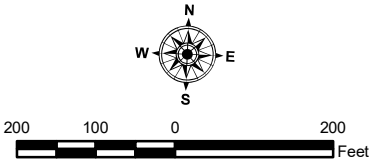

PETITION NO. 2023-09-01-05
A PART OF THE N.E. 1/4 OF SECTION 7

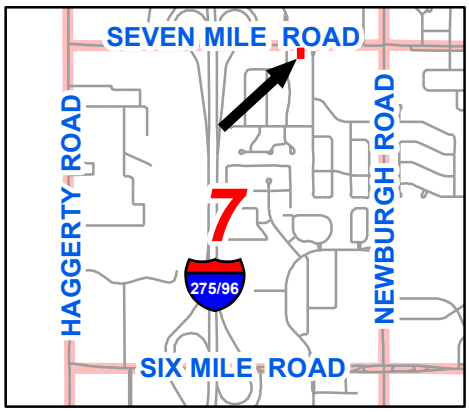

AMENDMENT NO. TO
THE LIVONIA ZONING MAP
CITY OF LIVONIA, MICHIGAN
ORDINANCE NO.
Adopted by the City Council on

_____ MAYOR

_____ CLERK

AN ORDINANCE AMENDING SECTION 7 OF THE ZONING MAP OF THE CITY OF LIVONIA AND AMENDING ARTICLE III OF LIVONIA ZONING ORDINANCE, AS AMENDED, KNOWN AND CITED AS "THE CITY OF LIVONIA ZONING ORDINANCE" BY ADDING SECTION 3.____ THERETO.

THE CITY OF LIVONIA ORDAINS:

Section 1. Pursuant to the report of the City Planning Commission, dated October 18, 2023, setting forth its resolution 10-60-2023 recommending approval of Petition 2023-09-01-05, having been considered by the Council, and the Council having conducted a public hearing on November 8, 2023, on said petition, and having concurred in the recommendation of the City Planning Commission, the Council hereby adopts said Petition 2023-09-01-05 to amend the Zoning Ordinance and Zoning Map of the City of Livonia and all proceedings heretofore conducted on said petition are hereby approved.

Section 2. Article III of the City of Livonia Zoning Ordinance, as amended, is hereby amended by adding thereto the following section:

Section 3. __. Petition 2023-09-01-05 submitted by Matick Construction L.L.C. is hereby approved, and the zoning classification of the premises hereinafter described is hereby changed from N2 (Neighborhood) to C-1 (Local Business):

> Land situated in the City of Livonia, County of Wayne, State of Michigan, described as follows:
>
> 07A1 Melody Manor T1S R9E L72 P 43 WCR Lot 1
>
> and the Northeast 1/4 of Section 7 of the Zoning Map is hereby amended to conform to the changes made in this section.

Section 4. The attached map designated "Amendment No. ___ to the Zoning Map of the City of Livonia" showing all of the amendments and changes made in the foregoing Section 2 of this ordinance is hereby approved, established and made a part hereof.

Section 5. All ordinances or parts of ordinances in conflict herewith are hereby repealed only to the extent necessary to give this ordinance full force and effect.

Section 6. Should any portion of this ordinance be held invalid for any reason, such holding shall not be construed as affecting the validity of any of the remaining portions of this ordinance.

_____

CITY OF LIVONIA
PUBLIC HEARING

Minutes of Meeting Held on Wednesday, November 8, 2023

A Public Hearing of the Council of the City of Livonia was held at the Livonia City Hall Auditorium on November 8, 2023.

MEMBERS PRESENT: Jim Jolly, President
Laura Toy, Vice President
Rob Donovic
Kathleen McIntyre
Scott Morgan

MEMBERS ABSENT: Scott Bahr
Brandon McCullough

OTHERS PRESENT: Paul Bernier, Assistant City Attorney
Mark Taormina, Planning and Economic Development Director
Sara Kasprowicz, Recording Secretary

The Public Hearing was called to order at 7:00 p.m. with Council President Jim Jolly presiding. This item is regarding Petition 2023-09-01-05 submitted by Matick Construction L.L.C. under Sections 13.13 and 13.15 of the Livonia Zoning Ordinance, as amended, requesting to rezone the property at 37739 Seven Mile Road, located on the south side of Seven Mile Road between Blue Skies Drive and Glengarry Drive in the Northeast ¼ of Section 7, from N2 (Neighborhood) to C-1 (Local Business).

This item will be moved to the Regular Meeting of **December 4, 2023**.

The Public Hearing is now open. There were approximately 3 persons in the audience.

Jolly Mr. Taormina, can you give us an introduction here?

Taormina Thank you. Again, this is a rezoning request involving property that is on Seven Mile Road just east of Blue Skies Drive. This parcel consists of a single lot, lot one of Melody Manor subdivision. Melody Manor was planted in 1950 lot one has about eight feet of frontage on Seven Mile Road and has a depth of 150 feet. The total lot area is 12,000 square feet. The property contains a house and an inground pool, both dilapidated and scheduled for demolition by the city. Surrounding this property immediately to the west are lots two and three of Melody Manor subdivision. These are both zoned C-1. These lots were rezoned and developed in 2006 and 2007. They are subject of a conditional zoning agreement. Lots one and two, immediately adjacent to the site, you'll notice they are the only lots within the subdivision that only have frontage on Seven Mile Road. So, what's unique about this lot and a lot immediately

to the west is, you'll notice, at least on this map, but if you look at the entire subdivision, they're the only two lots that have frontage on Seven Mile Road, where it is limited to Seven Mile Road. To the east and west are residential properties and are part of the subdivision and then north across Seven Mile Road is vacant property. The reason for the rezoning, this zoning change would facilitate the future development of a general professional office building that would be used mainly for sales and marketing in connection with a commercial contractor called Matick Construction. Preliminary site plans submitted show about a 2600 square foot building. You can see it's on the west side of the lot. And then just to familiarize with this plan, so this is the existing office building to the west of this property. The property we're looking at is right here. So, this gray rectangular shape would be the building that would be situated on the property. You can see the parking lot is about 13 parking spaces, is immediately to the east or on the east half of the site. Access would be limited to single drive-off on Seven Mile Road. According to the petitioner, no commercial vehicles would be parked there. The company's other location is on Amrhein Road within Livonia. The building setback is showing that at least on this conceptual plan, are 16 feet from Seven Mile Road, 20 feet from the south property line, 60 feet from the east property line and 8 feet from the west property line. So, all the setbacks, at least conceptually shown in this plan, do meet the zoning regulations. The petitioner has voluntarily offered a conditional zoning agreement. This would restrict the future use of the property general office. There was a draft agreement included in your packet and that agreement was modeled after the one that was approved for the adjacent property. Planning Commission has recommended approval of the zoning change. And with that, Mr. Chairman, Mr. President, I'll answer any questions you may have.

Jolly Thank you. Are there any questions from the Council? Mr. Donovic?

Donovic Thanks, Mr. President. The rendering that was provided to us, Mark, is it a true rendering? Is that what they're expecting the building to look like or was it just something that they threw on there?

Taormina I think this is an example. I'm gonna let the petitioner describe to you what his vision is for property, should the zoning move forward.

Donovic Thank you, Mr. President.

Jolly To the petitioner. Please come to the podium. Can you give us an introduction as to what your plans are?

Dinatali Yeah, Justin Dinatali, with Matick Construction. Looking to rezone 37739 Seven Mile to C-1. We're looking for a one-story building, 2600 square feet. This is kind of our inspirational photo right now. We've got an architect who created the site plan. And we're open to recommendations for facade layout. I know the city of Livonia has a certain look and feel that

they go for, for the commercial properties within Livonia. And we're very flexible in that manner. But we want something that's going to draw eyes and let everyone know that we're a construction company and kind of give a little bit of a flair to draw eyes and give some curb appeal compared to what's there currently. But we are flexible. So, we're not that set on this design.

Jolly If this move forward from this hearing, with a pending or expected approval, would you have those the architectural plans done for a site plan in the near future?

Dinatali Yes.

Jolly Okay. Vice President Toy.

Toy Thanks, Mr. President. To the petitioner through the Chair, how long have you been in business?

Dinatali 14 years. I was actually born and raised in the neighborhood right behind this property.

Toy So you knew where to buy. Where did you go to school?

Dinatali I went to Stevenson High School and Schoolcraft.

Toy Good for you. What kind of construction do you do, sir?

Dinatali Commercial Construction, no residential. For the last 14 years we've we've stepped to commercial and our current shop on Amrhein is where we do the construction related activities. That's where our vehicles are parked, that’s where we have shop space. Our intentions for this building are to house our executives, the other owner who's working at the other business, that's my Uncle Jim Matick, who started the company 14 years ago, Matick Construction. We plan to have himself, myself and our sales and marketing team within this building for strictly sales and marketing related activities.

Toy So how many do you employ full time, seasonal or whatever?

Dinatali Currently, right now, we have five W-2 employees. As a general contractor, we have hundreds of subcontractors with our logo in the area.

Toy Good for you. Thank you so much.

Jolly Mr. Donovic.

Donovic Thank you, Mr. President. Mr. Taormina, can you explain, this building has been condemned by the city of Livonia and is slated to be demoed. Can you give us an update on that, where the demolition is?

Taormina Yeah. So, the bids for the demolition work went out. They are scheduled their out for bid and I think next week is their bid opening. So, the city is moving forward with plans to demolish the structures on this property.

Donovic I know you guys are commercial construction. Personally, my preference you guys are not planning to bid to demo this building and get paid by the city are you?

Dinatali We think that we could save the city a significant amount of money by doing demolition. So, I did submit a bid to Mr. Hanna, but ultimately, that's your decision. I just think that, you know, being a family-owned small business in the city of Livonia and knowing that this is going to be our property, and the lien is ultimately going to be put on me, or the current owner. We submitted a pretty favorable bid for the demolition.

Donovic Mr. Bernier, is that a conflict of interest? I'm trying to wrap my mind around this. So, the petitioner is buying the building and has to have a demo. The building has to be demoed. The building has to be demoed to be able to get a plan approved on it eventually, and then the person buying it is bidding on it and he would be getting paid by the city to bid on the building that needs to be knocked down. Is there some sort of conflict here? It's hard to explain.

Bernier It's my understanding that they don't own the property at this time. So, in other words, they would just be bidding as a contractor for the demolition of it. Whatever cost is involved in it is going to go on the taxes at that closing time, then it's going to come out of the proceeds that the purchase the seller would get. So ultimately, it's not going to cost the city a nickel either way. And ultimately, it's probably not going to affect them either because they're going to buy the property.

Donovic So long as this gets rezone and approved, I'm assuming it's contingent upon…

Bernier I don't see a conflict. I understand what you're saying, but bottom line is, none of its going to come out of the city's pockets either way, because it's going to come out of the sale. That's going to come out of the sale of the building, and I'm sure the sale of the building is going to be factored by how much they have to be paid to knock it down. Obviously, there's other taxes. So, I don't I don't see a problem with it.

Donovic Thank you, Mr. President. Thanks, Mr. Bernier.

Jolly Vice President Toy.

Toy Just one last question to you, sir. Are you related to the Matick family that has the Chevy dealership on Schoolcraft there, is that your uncle?

Dinatali He's my great uncle. Jim’s grandfather, oh, great uncle.

Toy I'm going to offer an approving. It's nice to see people that live in Livonia, that will do business in Livonia and make a concerted effort to make the kind of offers you're making in regards, and that's not up to us, but others within our city. So, thank you very much.

Jolly Again, if there's nothing else from Council. I'd like what you said, to make this a showpiece for what you are. And I think that site deserves that coming from where it is now, to be something else that's a draw for good sites. Okay. With that being said, there is no one here for public comment and we will close the public hearing. Thank you very much. Appreciate everything and we'll see you soon.

As there were no further questions or comments, the Public Hearing was declared closed at 7:11p.m.

LETTER TO THE LIVONIA CITY COUNCIL

Planning
October 18, 2023

MEETING DATE	PREPARED BY
	Stephanie Reece, Program Supervisor,

AGENDA ITEM

Petition 2023-09-01-05 submitted by Matick Construction L.L.C. under Sections 13.13 and 13.15 of the Livonia Zoning Ordinance, as amended, requesting to rezone the property at 37739 Seven Mile Road, located on the south side of Seven Mile Road between Blue Skies Drive and Glengarry Drive in the Northeast ¼ of Section 7, from N2 (Neighborhood) to C-1 (Local Business).

BACKGROUND DETAILS

PREFERRED COUNCIL RECOMMENDATION/RESOLUTION (Please complete this field. Attachments are not to be used in lieu of the recommendation)

October 18, 2023

Honorable Members of the City Council
City of Livonia, Michigan

Re: Petition 2023-09-01-05 - Matick Construction

Dear Council Members:

At the 1,205th Public Hearings and Regular Meeting held by the City Planning Commission on October 17, 2023, the following resolution was adopted:

1. The Petitioner has agreed to voluntarily offer a conditional zoning agreement under MCL 125.3405 of the Michigan Zoning Enabling Act, Act 110 of 2006, which will include a statement of conditions that will limit the use of the property for general office purposes only.

2. Changing the zoning of the property to C-1, Local Business, and restricting the use to a general office is appropriate given the unique circumstances of this property, including its size and location.

3. Development of the site consistent with the conceptual plan presented by the Petitioner would be compatible with the surrounding neighborhood and an enhancement.

4. The proposed zoning change represents a reasonable and logical plan for the subject property that adheres to sound land use planning principles.

SPECIFIC NAME OF PRODUCT AND NUMBER TO BE PURCHASED (if more than one)

CONTRACT: Amount and/or purchase price and length of contract (with dates if applicable)

DETAILED WORK BEING PERFORMED

November 8, 2023

FISCAL CONSIDERATIONS (Amount requested and Account(s) used. If applicable, Grant Funding information)

ACCEPTANCE OF BID (Please detail the following: Why accepted, why not lowest bidder, company name, contact person, full address)

REASON TO WAIVE BID PROCESS (Emergency, Professional services, No advantage to City and why, Consortium package, etc):

ATTACHMENTS

1. 2023-09-01-05_E-COUNCIL Pkt

APPROVED BY

Date: October 18, 2023

Mark Taormina, Planning and Economic Development Director

Date: October 19, 2023

Maureen Miller Brosnan, Mayor

Petition 2023-09-01-05 submitted by Matick Construction L.L.C. under Sections 13.13 and 13.15 of the Livonia Zoning Ordinance, as amended, requesting to rezone the property at 37739 Seven Mile Road, located on the south side of Seven Mile Road between Blue Skies Drive and Glengarry Drive in the Northeast ¼ of Section 7, from N2 (Neighborhood) to C-1 (Local Business).

REZONING APPLICATION
CITY OF LIVONIA, MICHIGAN

All applications must be presented in quadruplicate to the City Clerk, 33000 Civic Center Drive, Livonia, MI 48154-3097. Applications **must** include property owner's name, address and notarized signature. You are invited and encouraged to review your proposal with the Planning Department staff.

Date Filed: 08/30/2023 Petition 2023-09-01-05

Site Address: 37739 SEVEN MILE RD. Sidwell 025 01 0001 000

Requesting To Rezone Property From R3 To C1

For the Following Reason (s) 2,600 SF OF OFFICE SPACE FOR MATICK CONSTRUCTION

Applicant: JUSTIN DINATALE Business/Company: MATICK CONSTRUCTION

Applicant's Address: 36959 AMRHEIN City: LIVONIA State: MI Zip Code: 48150

Applicant's Phone # (734) 497-6635 Applicant's Email JUSTIN@MATICKCONSTRUCTION.COM

For fee computation, see attached Fee Schedule **Please provide the following information:**

RECEIVED
SEP 14 2023
CITY OF LIVONIA
PLANNING COMMISSION

1) **Legal Description** of the property to be considered. Paper copy must be clearly printed.
2) **Fully Dimensional Map (3 copies)** drawn at an appropriate scale, with a north arrow, dated & legend key to symbols and showing:
   - The land that would be affected by the proposed amendment.
   - The dimensions, square footage & acreage of the land.
   - The existing conditions of the site, including all structures & parking layout.
   - A legal description of the land to be rezoned.
   - All public and private right-of-ways & easements bounding & intersecting the site.
   - A preliminary plan showing the proposed land use(s) of the land under consideration.
   - The zoning classification of all abutting zoning districts.
   - The structures and existing land uses on all property adjacent to the subject parcel and on other such property as may, in the City Planner's determination, be necessary to properly reflect the existing character of the surrounding neighborhood.
3) A copy of the Fully Dimensional Map submitted in a pdf. format either on a CD or it can be emailed to Planning@livonia.gov

Owner of Property: KAREN ANN LORING

Owner's Address: 21555 HAGGERTY City: NOVI State: MI Zip Code: 48375

Owner's Phone # 248 533-9387 Owner's Email SUNTZU1776@gmail.com

Signature of Owner: Karen Ann Loring Print Name: KAREN ANN LORING

Subscribed and sworn to before me, a Notary Public in and for the County of Oakland State of Michigan

on this 12th day of May 2023.

Signature of Notary Alyssa M. Craigie My commission expires 09/25/2029.

ALYSSA MARIE CRAIGIE
NOTARY PUBLIC, STATE OF MI
COUNTY OF OAKLAND
MY COMMISSION EXPIRES Sep 23, 2029
ACTING IN COUNTY OF Oakland.

APPROVED AS FORM
Department of Law

By: Michael E. Fisher

Date: 9/12/2023

UNAPPROVED MINUTES

MINUTES OF THE 1,205th PUBLIC HEARINGS AND REGULAR MEETING HELD BY THE CITY PLANNING COMMISSION OF THE CITY OF LIVONIA

On Tuesday, October 17, 2023, the City Planning Commission of the City of Livonia held its 1,205th Public Hearing and Regular Meetings in the Livonia City Hall, 33000 Civic Center Drive, Livonia, Michigan.

Mr. Ian Wilshaw, Chairman, called the meeting to order at 7 p.m.

Members present:	Wafa Dinaro	David Bongero	Sam Caramagno
	Glen Long	Peter Ventura	Ian Wilshaw

Members absent: None

Mr. Scott Miller, Planner IV, Jacob Uhazie, Planning & Economic Development Coordinator, and Stephanie Reece, Program Supervisor, were also present.

Chairman Wilshaw informed the audience that if a petition on tonight's agenda involves a rezoning request, this Commission makes a recommendation to the City Council who, in turn, will hold its own public hearing and make the final determination as to whether a petition is approved or denied. The Planning Commission holds the only public hearing on a request for preliminary plat and/or vacating petition. The Commission's recommendation is forwarded to the City Council for the final determination as to whether a plat is accepted or rejected. If a petition requesting a waiver of use or site plan approval is denied tonight, the petitioner has ten days in which to appeal the decision, in writing, to the City Council. Resolutions adopted by the City Planning Commission become effective seven (7) days after the date of adoption. The Planning Commission and the professional staff have reviewed each of these petitions upon their filing. The staff has furnished the Commission with both approving and denying resolutions, which the Commission may, or may not, use depending on the outcome of the proceedings tonight.

ITEM #1 PETITION 2023-09-01-05 Matick Construction

Mr. Caramagno, Secretary, announced the first item on the agenda, Petition 2023-09-01-05 submitted by Matick Construction L.L.C. under Sections 13.13 and 13.15 of the Livonia Zoning Ordinance, as amended, requesting to rezone the property at 37739 Seven Mile Road, located on the south side of Seven Mile Road between Blue Skies Drive and Glengarry Drive in the Northeast ¼ of Section 7, from N2 (Neighborhood) to C-1 (Local Business).

Mr. Miller: This parcel measures 80 feet along Seven Mile Road and has a depth of 150 feet and is therefore 12,000 square feet in size. It currently contains a residential house and an in-ground pool. The change of zoning would facilitate the development of an office building. To the west is an office building occupied by a Farmers Insurance Agency that is zoned C-1. To the east and south are residential homes zoned N2 and to the north across Seven Mile Road, is vacant property that is zoned RUF. The existing house and pool would be removed as part of the redevelopment. The preliminary site plan shows a 2,600 square foot building on the west half of the site and on the east half of the site would be a parking lot. Access to the site would be by a single drive off a Seven-Mile Road. General office is considered a permitted use in C-1 zoning. If this rezoning is approved, the development of this office building would be required to go through the site plan approval process. That is the extent of this petition.

Mr. Wilshaw: Okay, thank you, Mr. Miller. Is there any correspondence from departments?

Mr. Uhazie: Yes. The first item is from the Engineering Division, dated September 18, 2023, which reads as follows: *"In accordance with your request, the Engineering Division has reviewed the above referenced petition. We have no objections to the proposed rezoning at this time but would like to note the following items: 1. The subject parcel is assigned the address of #37739 Seven Mile Road. Once drawings have been submitted for permits, the Engineering Department will assign additional addresses if needed. 2. The legal description included with the submitted drawings appears to be correct and should be used in conjunction with this project should the rezoning be approved. 3. The existing parcel is currently serviced by public sanitary sewer, water main and storm sewer. The submitted drawings do not include any information regarding proposed services to the buildings, but we do not believe there will be any negative impacts to the system with the proposed usages. 4. The proposed development will be required to meet the Wayne County Stormwater Ordinance. The submitted drawings do not indicate any storm sewer information, but the developer will need to obtain storm sewer permits through the Wayne County Department of Public Service prior to construction. 5. Any work within the Seven Mile Road right-of-way will require permitting through Wayne County."* The letter is signed by David W. Lear,

P.E., Assistant City Engineer. The next letter is from the Finance Department, dated September 20, 2023, which reads as follows: *"I have reviewed the addresses connected with the above noted petition. The following amounts are due to the City of Livonia: $895.12 Unpaid Water and Sewer charges"* The letter is signed by Connie Kumpula, Chief Accountant. This has been paid on September 25, 2023. It has been resolved. The next letter is from the Treasurer's Department, dated October 1, 2023, which reads as follows: *"In accordance with your request, the Treasurer's Office has reviewed the name and addresses connected with the above noted petition. At this time there are taxes due, and they are delinquent. ALL taxes for this location that are on the 2023 tax roll will need to be paid before the demolition of the building."* The letter is signed by Lynda Scheel, Treasurer. There has been an update to that, and the taxes were paid on October 3, 2023. That is it.

Mr. Wilshaw: Okay, are there any questions from any of our commissioners for our planning staff? I don't see any questions from commissioners. Is our petitioner in the audience? Please come forward to the podium. We'll ask that you start with your name and address for the record.

Justin DiNatale, 37739 Seven Mile Road, Livonia, MI.

Mr. Wilshaw: Thank you for coming tonight. I do want to remind both the petitioner and my fellow commissioners that this is a rezoning request, and the primary focus tonight should be on zoning issues. Although I do know you've submitted some preliminary conceptual building layouts and stuff like that to us as well. So, I just want to acknowledge that.

Mr. DiNatale: Yes, correct. The architect is actually here tonight if you have any questions.

Mr. Wilshaw: Okay. Great. Thank you. What else would you like to tell us about your petition that you haven't already heard from our planning staff?

Mr. DiNatale: Nothing other than what we talked about in the study meeting. I mean, we're just a growing commercial general contractor here in Livonia. Born and raised in Livonia and want to continue to grow within Livonia. Right now, we have a shop on Amrhein Road. All commercial construction activities, including our trades or commercial vehicles, and any construction related activities are going to remain at the Amrhein Road location. The

purpose of this property, that we wish to rezone, is to house our sales and marketing and executives, which will not be driving commercial vehicles and will only be doing office type related activities. It'll simply be maintained as an office building and I did review the conditional rezoning verbiage that was sent to me by Mark Taormina, and we are completely flexible and willing to accept the conditional rezoning.

Mr. Wilshaw: Okay. And just for everyone's benefit, the discussion around conditional zoning was brought up in relation to this user having this particular zoning for the property, and if this user was to perhaps move to a bigger office or need to relocate or whatever, what would happen to this property if you were to leave and what you're proposing is to offer a voluntary conditional letter saying that this zoning would be tied to your use of this property and that if you were to leave this property, then the zoning could revert back to its former condition. So, I just wanted to acknowledge that, so thank you. If there's any questions from any of our commissioners for the petitioner? Ms. Dinaro.

Ms. Dinaro: Justin, what's the timing on the demolition of the vacant house that's there?

Mr. DiNatale: So, I know that the City of Livonia…it was voted that the current owner, which is Miss Loring, would have to demo the property within 60 days, otherwise there'd be a lien on the property. Matick construction submitted a bid to the City of Livonia for the demolition of the property, which we have not heard back on, but we are going to demo it as soon as, you know, basically, our purchase agreement is contingent on the rezoning of the property at the moment. So, if the property is clear to rezone, we plan on demolition immediately. We've already got all the crew in place to do such.

Ms. Dinaro: Great.

Mr. Wilshaw: Thank you, Ms. Dinaro. Any other questions for the petitioner? Mr. Bongero.

Mr. Bongero: I think at the study meeting, you said you did speak with the neighbors.

Mr. DiNatale: Yes.

Mr. Bongero: And they're in favor?

Mr. DiNatale: Yeah. I actually grew up in the neighborhood. Yeah, and everyone's excited to see the blight that exists there today go away, at least the people I spoke to.

Mr. Bongero: Okay. That's all. Thank you.

Mr. Wilshaw: All right. Any other questions from any of our commissioners? Mr. Caramagno.

Mr. Caramagno: I know when we spoke about the rezoning of this property, there was some question about what would be required as a barrier around this property. Would there be a vinyl fence or a concrete wall? What have we found out about that? And would that be part of the agreement going forward?

Mr. DiNatale: Yeah, I think we prefer to do a vinyl fence rather than any other material just in terms of aesthetics being that it backs up to a neighborhood. And then we're, I think that's, that's something that would go through the planning review when we submit our plans for the property, but we're flexible. You know, we don't have any hard stops on facade requirements, the fencing, etc. So, we're willing to accommodate city of love on his request. But right now, our plan is for a vinyl fence.

Mr. Caramagno: Okay, Mr. Chairman, for the planning commissioners, is that a requirement when you put a commercial property next to residential, you have to have some sort of barrier?

Mr. Miller: Right, right. You have to have a protective wall, greenbelt, or in this case, you could do a fence if that's what the neighbors want.

Mr. Caramagno: Does that choice lie with the developer or the builder, or is that a…is that a choice that is understood between the two parties?

Mr. Miller: That is up to you guys too during site plan approval. If you guys approve a fence.

Mr. Caramagno: Okay. Thank you. So that's the next step. Thank you.

Mr. DiNatale: And there is fencing that exists there today. But it's all different types of materials. There is metal and vinyl and wood, thank you.

Mr. Wilshaw: Thank you, Mr. Caramagno. Any other questions for our petitioner? I don't see any other questions. Anything else that you'd like to state before we move to our audience members?

Mr. DiNatale: No. Okay. Thank you.

Mr. Wilshaw: Alright. Just take a seat for a moment. We'll see if there's anyone in our audience wishing to speak for or against this petition. You're welcome to come forward and give your thoughts. We do have one person in the audience coming forward at this time. Good evening, sir.

Tim Orow, 19069 Glengarry, Livonia, MI. I live right behind the house. Right on the corner of Glengarry and Seven Mile. Sorry, you never talked to us? So I'm not sure what neighbors…

Mr. Wilshaw: Sir, if you could please talk to us.

Mr. Orow: I never had a conversation with this person. All I saw was a sign outside the property saying it was going to be rezoned. I know absolutely nothing about what is planned for the property, what it would look like. I mean, I had to face that current resident's home for years, and it's always looked like that, and then they took the roof off. But, you know, we were happy to see that it was going to get demolished. So, my concerns are I just don't know what really is planned. Nothing was discussed with us. I don't know what neighbors were consulted about future plans.

Mr. Wilshaw: Okay. What is your thought on what you've heard so far today? Obviously, you're still learning, but what's your opinion in terms of the rezoning and development of this property.

Mr. Orow: There is already a commercial building next door to that. I'm not sure what other options are for that property other than leaving it vacant, which causes other issues. I'm not totally against it. I just…since I backup to it, it would be nice to know what it would look like. Things like that and understand the usage. That's not an issue. It's just not a very wide site, so I don't know how that would get laid out, as far as what is the traffic going to look like. Just, you know, the aesthetics.

Mr. Wilshaw: Sure. Okay, well, let me at least explain, we do have some conceptual ideas of what the…how the property is going to be laid out, the petitioner may be able to give you some of that, so that you can see it. In fact, I think he's handing it to you right now. But for what it's worth, just so you know how this process

works, we're in the zoning process right now to rezone the property from its current residential zoning to this commercial use, which also includes office use. We don't have a separate zoning for office at this point. So that's why their intention is to use it as an office not as a commercial building, if you want to consider it that way. But what we're going to do is make a decision today on the zoning part of the process. Once that happens, then he has to go to the City Council. City Council has to approve that zoning as well and then he's going to come back to us in a separate process called the site plan. And that's where we really get into the nitty gritty of what the building is going to look like, how it's gonna be laid out, the materials, the parking lot, the fencing, all those types of things. So that's the second part. That's the second half of this process, if you will. So, you do have another chance, for what it's worth, to come back and watch that process as well and give your input. So, I just want to share that with you.

Mr. Orow: Yeah and as I said, I'm not opposed. Just surprised.

Mr. Wilshaw: You just want to you want to learn more about it, too.

Mr. Orow: Yeah, it does affect us in some regards, especially being close proximity. Definitely understand any, obviously, anything is an improvement.

Mr. Wilshaw: Well, thank you.

Mr. Wilshaw: Thank you for your comments, sir. Anyone else in the audience wishing to speak on this item? either for or against? If not, the petitioner certainly has a chance to make a last comment if he wants to. I think he's already had a chance to make comments. Is there anything else you wanted to add?

Mr. DiNatale: No, but again, we're very flexible. Very flexible, and, you know, happy to give out my information and discuss offline as well. The neighbors that I spoke to received this piece of paper with a description of what we're looking to do and the picture of the rendering.

Mr. Wilshaw: Okay, great. And I appreciate you providing that to this particular resident who obviously didn't get that. So that's good.

Mr. DiNatale: Thank you.

Mr. Wilshaw: Thank you. All right. If there's no other comments, I can close the public hearing and a motion would be an order from the Commission.

On a motion by Bongero, seconded by Dinara, and unanimously adopted, it was

#10-60-2023 ***RESOLVED***, That the City Planning Commission does hereby recommend to the City Council that Petition 2023-09-01-05 submitted by Matick Construction L.L.C. under Sections 13.13 and 13.15 of the Livonia Zoning Ordinance, as amended, requesting to rezone the property at 37739 Seven Mile Road, located on the south side of Seven Mile Road between Blue Skies Drive and Glengarry Drive in the Northeast ¼ of Section 7, from N2 (Neighborhood) to C-1 (Local Business)., be approved subject to the following conditions:

1. The Petitioner has agreed to voluntarily offer a conditional zoning agreement under MCL 125.3405 of the Michigan Zoning Enabling Act, Act 110 of 2006, which will include a statement of conditions that will limit the use of the property for general office purposes only.

2. Changing the zoning of the property to C-1, Local Business, and restricting the use to a general office is appropriate given the unique circumstances of this property, including its size and location.

3. Development of the site consistent with the conceptual plan presented by the Petitioner would be compatible with the surrounding neighborhood and an enhancement.

4. The proposed zoning change represents a reasonable and logical plan for the subject property that adheres to sound land use planning principles.

FURTHER RESOLVED, That notice of the above hearing was given in accordance with the provisions of Section 13.13 and 13.15 of the Livonia Zoning Ordinance, as amended.

Mr. Wilshaw: Is there any discussion?

Mr. Wilshaw, Chairman, declared the motion is carried and the foregoing resolution adopted. It will go on to City Council with an approving resolution.

Reason for Rezoning Request

Ma#ck Construc#on is reques#ng the rezoning of 37739 7 Mile Rd. from R3 to C1 so that we can build a 2,600 sq D office space to serve as a headquarters for our Livonia based Design/Build Commercial General Contracng Āfirm. The space will house 5 execuvĀes of Ma#ck ConstruconĀ, there will not be any commercial vehicles on premises, nor will there be any construcon Ārelated acvĀiĀes taking place within the space once it's finished. The space will simply be used for offices as we will be keeping our current space at 36959 Amrhein Rd. Livonia, MI for our shop space/parking of commercial vehicles. Ma#ck Construcon Āis a family-owned, Livonia based, small business, that has been around for 15 years. We look forward to growing our business in the city we were born and raised in and appreciate your consideraĀon of our request. Below is a rendering of what we would like to build but we are happy to accommodate façade requests from the city of Livonia.

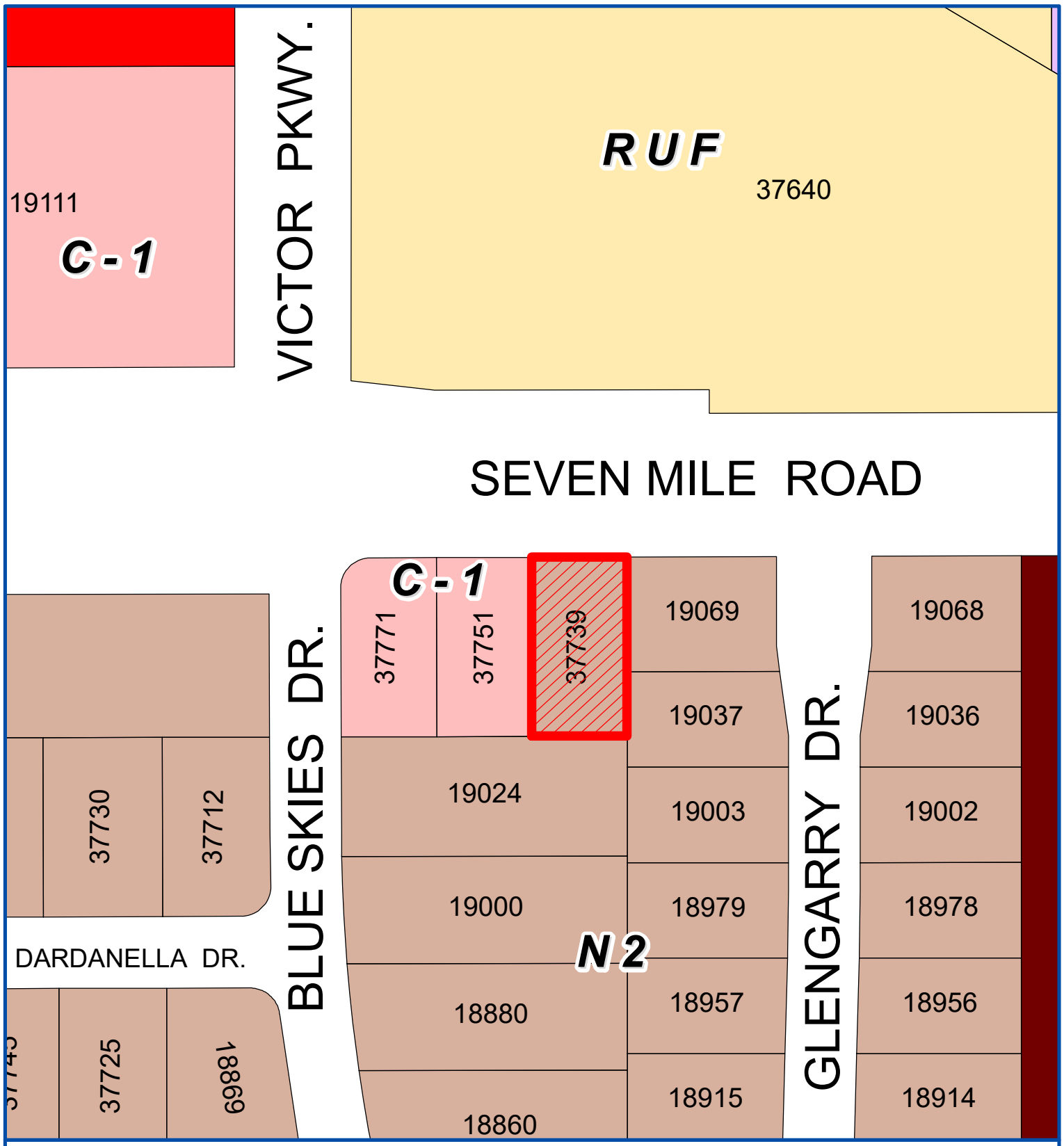

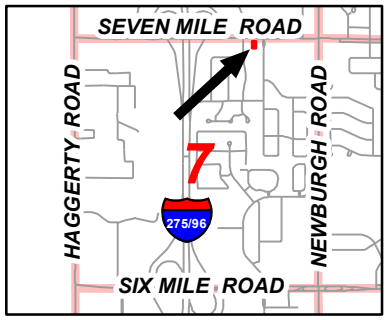

Address & Zoning Map

Petition 2023-09-01-05
Matick Construction
37739 Seven Mile Road
N2 to C-1

N

Not to Scale

City of Livonia
Planning Department

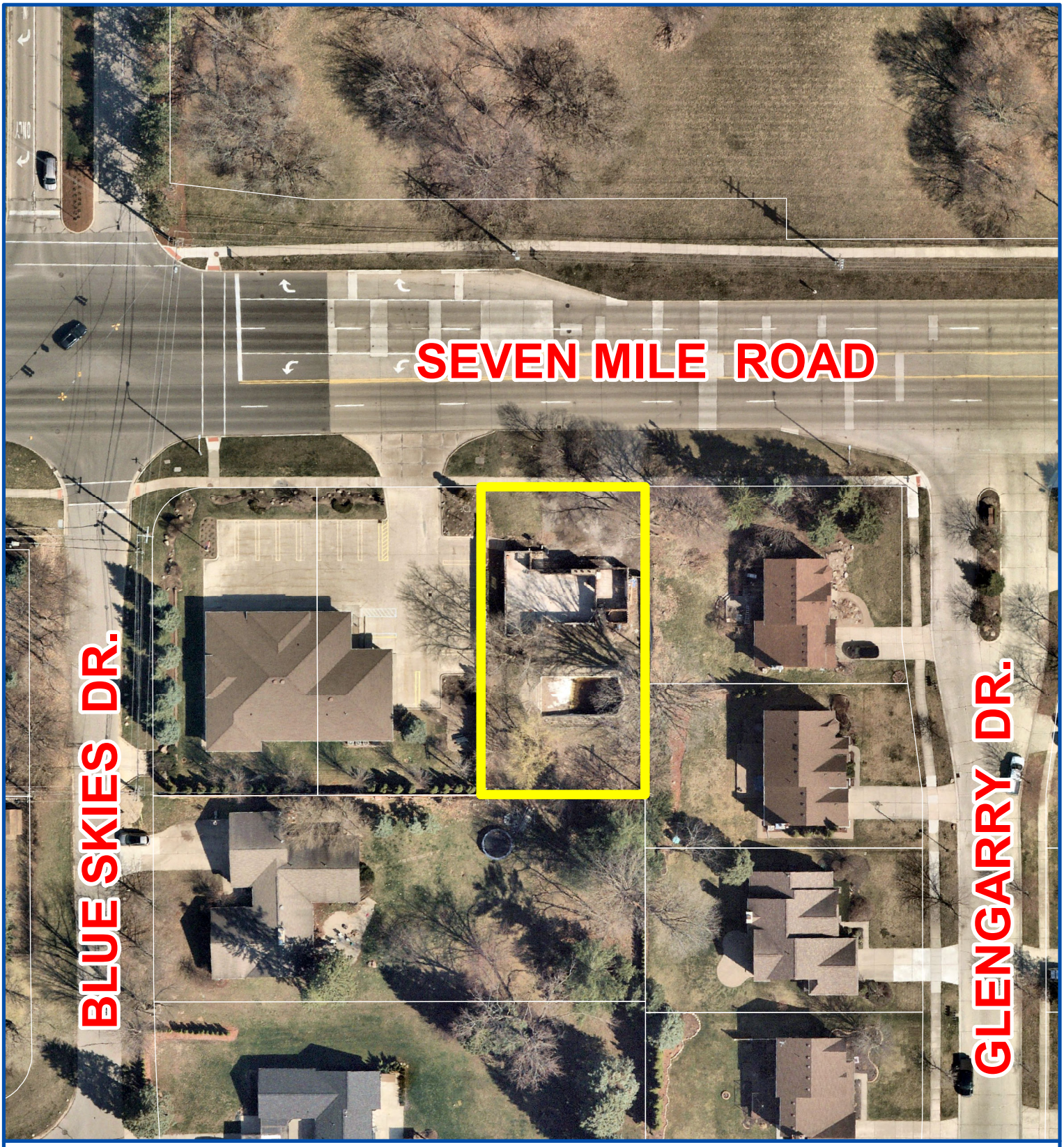

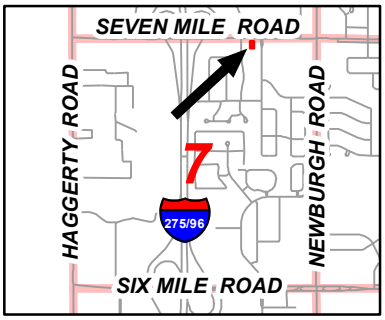

Aerial Map

Petition 2023-09-01-05
Matick Construction
37739 Seven Mile Road
N2 to C-1

N

Not to Scale

City of Livonia
Planning Department

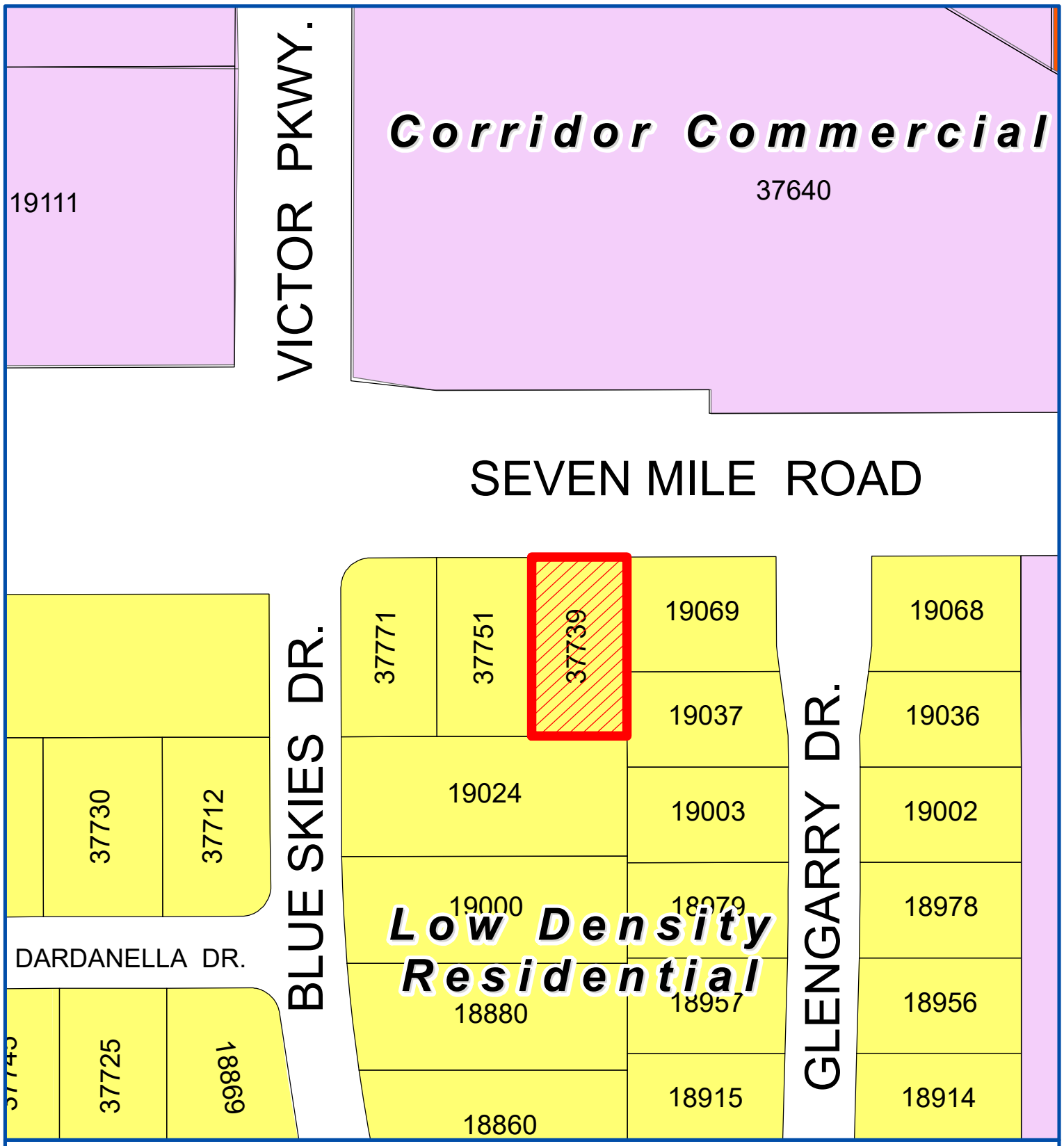

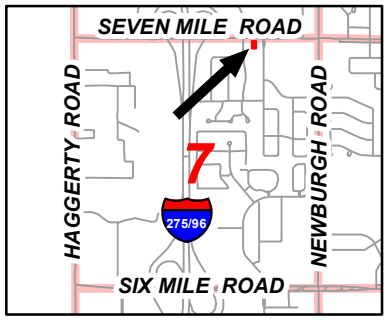

Future Land Use Map

Petition 2023-09-01-05
Matick Construction
37739 Seven Mile Road
N2 to C-1

N

Not to Scale

City of Livonia
Planning Department

PLANNING COMMISSION STAFF NOTES

PREHEARING

ITEM 1

Petition 2023-09-01-05 submitted by Matick Construction L.L.C. under Sections 13.13 and 13.15 of the Livonia Zoning Ordinance, as amended, requesting to rezone the property at 37739 Seven Mile Road, located on the south side of Seven Mile Road between Blue Skies Drive and Glengarry Drive in the Northeast ¼ of Section 7, from N2 (Neighborhood) to C-1 (Local Business).

October 10, 2023: Study Meeting:

This rezoning petition involves a parcel on the south side of Seven Mile Road between Blue Skies Drive and Glengarry Drive. The parcel measures approximately eighty feet (80') in width along Seven Mile Road by a depth of 150 feet for a land area of 12,000 square feet or roughly 0.28 acres. The subject property contains a residential house and an inground pool. The change of zoning would facilitate the development of an office building.

A letter accompanying the request explains that the rezoning would allow Matick Construction to build an office building that would serve as the Company's headquarters. Matick Construction is a family-owned company that has been in business for fifteen years. They are a general contractor specializing in commercial remodels, tenant improvements, light industrial spaces, and medical offices and renovations. The envisioned office building would accommodate five (5) executive suites. No commercial vehicles would be parked at this location. Their current location on Amrhein Road would remain their shop, where the Company's commercial vehicles would be kept.

Immediately west of the subject site is an office building occupied by a Farmer Insurance Agency, zoned C-1. To the east and south are residential properties zoned N2. To the north, across Seven Mile Road, is a vacant property zoned RUF, Rural Urban Farm.

The Livonia Vision 21 Future Land Use map designates the subject property as *Low-Density Residential,* corresponding with the existing zoning. The current N2 zoning requires a minimum lot area of 8,400 square feet, a minimum lot width of seven feet (70'), and a minimum depth of 120 feet.

The existing house and pool would be removed as part of the redevelopment of the property. The preliminary site plan shows a 2,600-square-foot building on the west half of the site. A parking lot would occupy the east half of the site. Required parking for a general office building is one (1) space for each 200 square feet of floor area. A structure of this size (2,600 x 80% ÷ 200) would require eleven (11) parking spaces. The preliminary site plan shows thirteen (13) parking spaces. Access to the site would be from a single drive off Seven Mile Road.

In a C-1 district, the minimum required front yard setback for a building is fifteen feet (15'). The proposed building would set back approximately sixteen feet (16') from Seven Mile Road. The minimum required setback for the rear yard is twenty feet (20'); in this case, the office building appears to be approximately twenty feet (20') from the south property line. The minimum side yard setback from the residential district to the east is twenty feet (20'). The

building would be approximately sixty feet (60') from the east property line. Where the property abuts C-1 zoning along the west, the Ordinance allows for a zero-setback subject to applicable building and fire codes. The site plan shows that the building would be setback eight feet (8') from the west property line. The building appears to comply with all minimum required setback regulations.

General office buildings fall under permitted uses in the C-1 zoning district. The office building would need to go through the site plan approval process before development. This procedure requires both Planning Commission and City Council review and approval. During this time, a more intensive study of the plans, including site, landscape, and elevations, would occur.

SKETCH NO. SK-01

PROJECT NAME: MATICK OFFICE

PROJECT NO.: ABD2341

DATE: 08/29/23

FROM SHT.: N/A

SEVEN MILE ROAD 120' R.O.W.

ABD ARCHITECTS

ABD ARCHITECTS, INC.

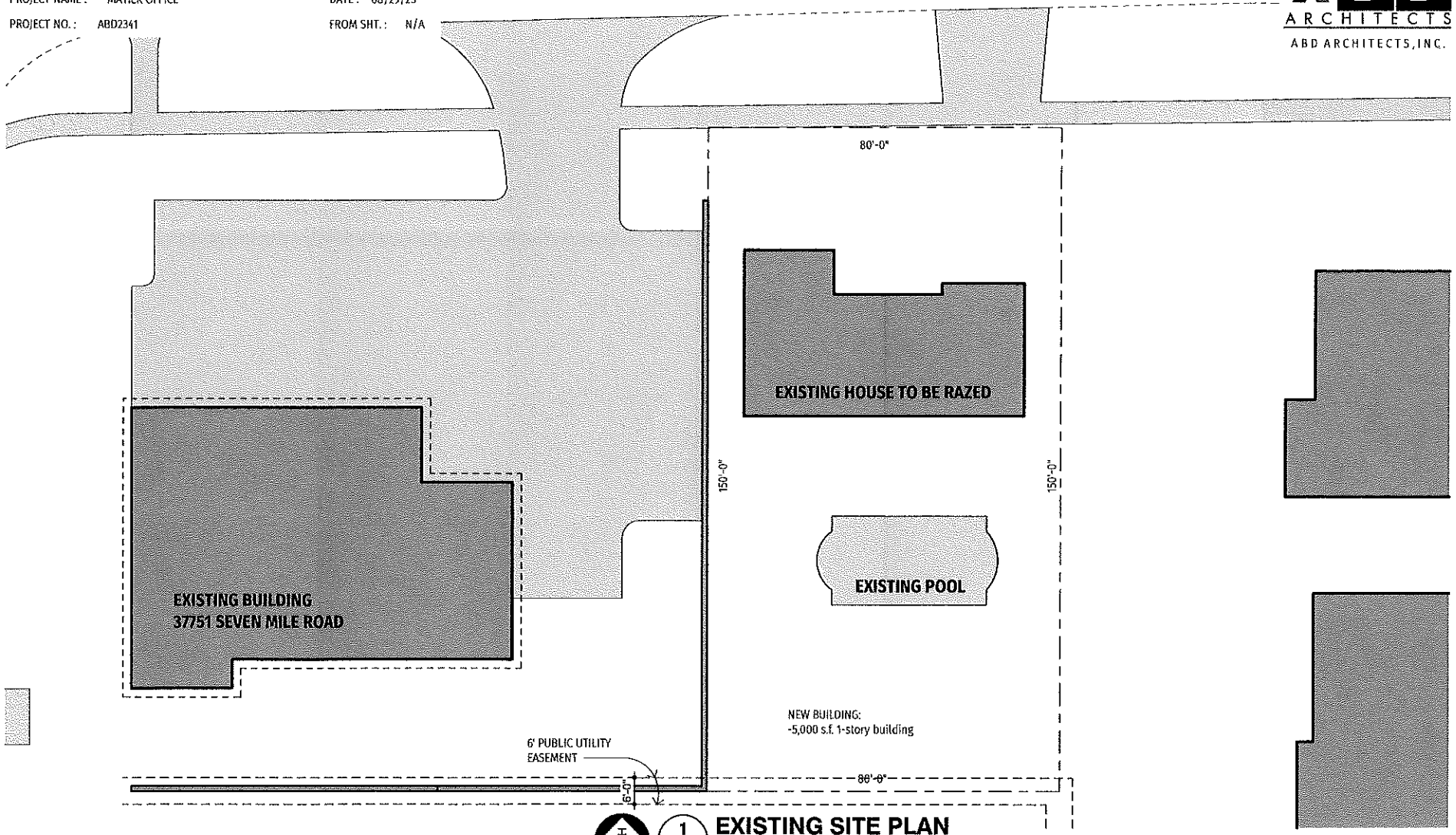

1 SK-01 **EXISTING SITE PLAN**

SCALE: 1" = 20'-0"

DO NOT SCALE DRAWINGS

© 2023 ABD ARCHITECTS, INC.

2601 WENDOVER RD. BLOOMFIELD HILLS, MICHIGAN 48302 PHONE (248) 213-6010 WWW.ABDARCH.COM

SKETCH NO. SK-02

PROJECT NAME: MATICK OFFICE

PROJECT NO.: ABD2341

DATE: 08/29/23

FROM SHT.: N/A

SEVEN MILE ROAD 120' R.O.W.

ABD ARCHITECTS

ABD ARCHITECTS, INC.

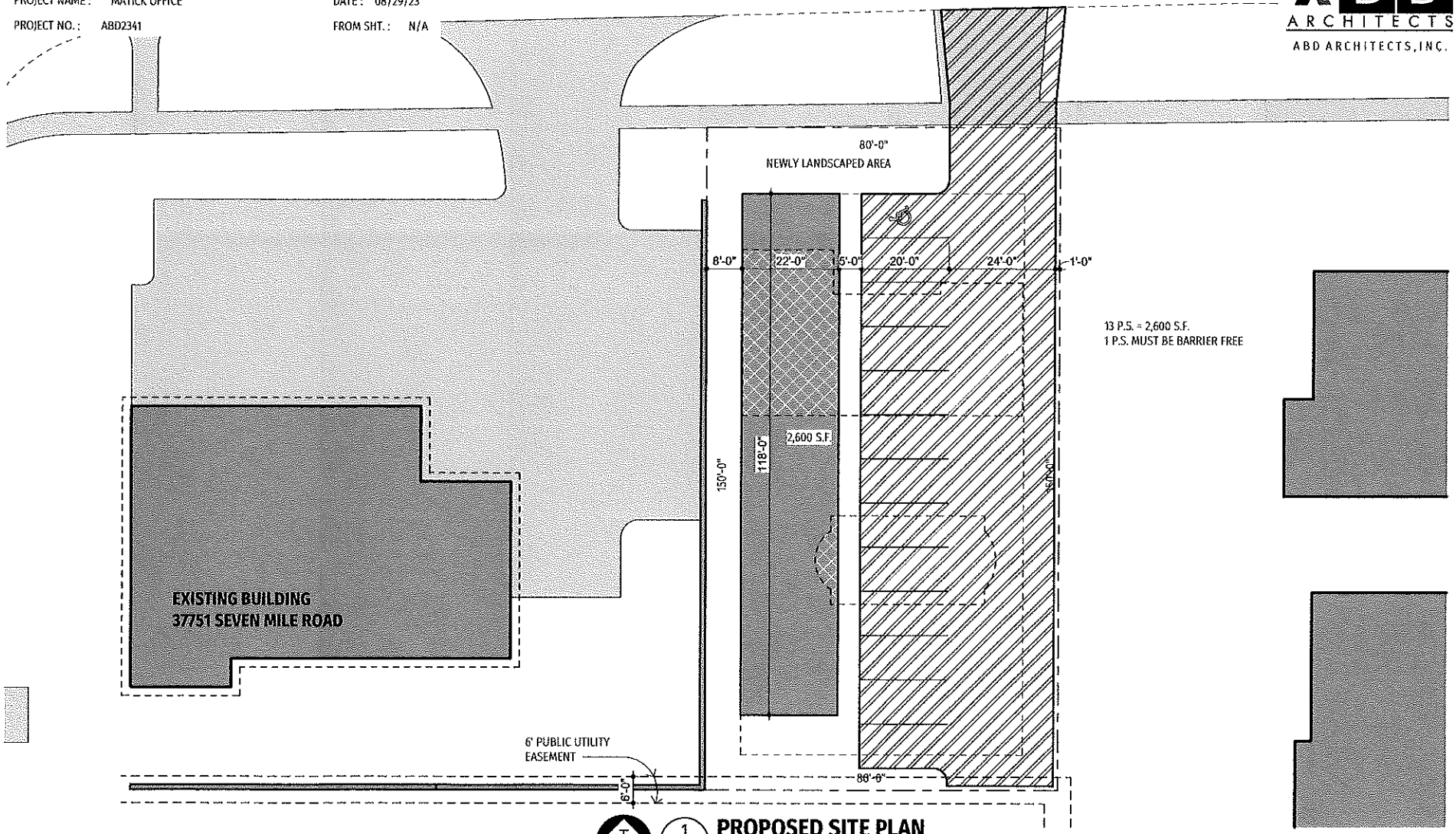

NORTH

1 SK-02 **PROPOSED SITE PLAN**

SCALE: 1" = 20'-0"

DO NOT SCALE DRAWINGS

© 2023 ABD ARCHITECTS, INC.

2601 WENDOVER RD. BLOOMFIELD HILLS, MICHIGAN 48302 PHONE (248) 213-6010 WWW.ABDARCH.COM

Coffin | Benner

CORRESPONDENCE

DEPARTMENT OF PUBLIC WORKS
ENGINEERING DIVISION

TODD J. ZILINCIK, P.E.
CITY ENGINEER

DAVID W. LEAR, P.E.
ASST. CITY ENGINEER

MAUREEN MILLER BROSNAN
MAYOR

DONALD R ROHRAFF
DIRECTOR OF PUBLIC WORKS

12973 FARMINGTON ROAD
LIVONIA, MICHIGAN 48150
(734) 466-2571
FAX: (734) 466-2195

September 18, 2023

Mr. Scott Miller
Planner IV
City of Livonia

Re: Petition 2023-09-01-05 – #37739 Seven Mile Road

Dear Mr. Miller:

In accordance with your request, the Engineering Division has reviewed the above referenced petition. We have no objections to the proposed rezoning at this time, but would like to note the following items:

1. The subject parcel is assigned the address of **#37739 Seven Mile Road**. Once drawings have been submitted for permits, the Engineering Department will assign additional addresses if needed.

2. The legal description included with the submitted drawings appears to be correct, and should be used in conjunction with this project should the rezoning be approved.

3. The existing parcel is currently serviced by public sanitary sewer, water main and storm sewer. The submitted drawings do not include any information regarding proposed services to the buildings, but we do not believe there will be any negative impacts to the system with the proposed usages.

4. The proposed development will be required to meet the Wayne County Stormwater Ordinance. The submitted drawings do not indicate any storm sewer information, but the developer will need to obtain storm sewer permits through the Wayne County Department of Public Service prior to construction.

5. Any work within the Seven Mile Road right-of-way will require permitting through Wayne County.

Should you have any additional questions on this matter, please feel free to contact myself at (734) 466-2608 or the City Engineer, Mr. Todd Zilincik at (734) 466-2561. If you would prefer, you can e-mail either of us at dlear@livonia.gov or tzilincik@livonia.gov.

Sincerely,

David W. Lear, P.E.
Assistant City Engineer

cc: 2023 Petition File

DEPARTMENT OF FINANCE

Michael T. Slater
DIRECTOR OF FINANCE

Connie Kumpula
CHIEF ACCOUNTANT

MAUREEN MILLER BROSNAN
MAYOR

33000 CIVIC CENTER DRIVE
LIVONIA, MICHIGAN 48154-3097
(734) 466-2260
FAX: (734) 421-1807

September 20, 2023

Mr. Scott O. Miller
Planning Commission
33000 Civic Center Drive
Livonia, MI 48154

Petition 2023-09-01-05 - 37739 Seven Mile Road

Dear Mr. Miller,

I have reviewed the address connected with the above noted petition. The following amounts are due to the City of Livonia:

Unpaid water and sewer charges:	$	895.12
Total Due City of Livonia	$	895.12

Please contact me if you have any further questions.

Very truly yours,

Connie Kumpula
Chief Accountant

CK: jw

Transaction Statement

Service Address
37739 SEVEN MILE LIVONIA, MI 48152

Mailing Address
KAREN ANN LORING 21555 HAGGERTY STE 1121 NOVI, MI 48375

Account Number	Amount Due
032503100-001	$895.12

Account Number	From - Through
032503100-001	10/01/2022 - 09/18/2023

Services
Water & Sewer - Metered

Service Address
37739 SEVEN MILE LIVONIA, MI 48152

Beginning Balance
$871.82

Date	Type	Amount	Description
10/14/2022	Penalty	$87.19	
10/15/2022	Bad Debt	($529.70)	Adjustment Reason: Transfer
12/15/2022	Bill	$69.75	Due Date 01/10/2023
01/13/2023	Penalty	$49.90	
03/15/2023	Bill	$69.75	Due Date 04/10/2023
04/13/2023	Penalty	$61.88	
06/15/2023	Bill	$69.75	Due Date 07/10/2023
07/13/2023	Penalty	$75.03	
09/15/2023	Bill	$69.75	Due Date 10/10/2023

Total Due
$895.12

Transaction Statement

Account Number	032503100-001

From:	Justin DiNatale
To:	Miller, Scott
Cc:	Planning
Subject:	Re: FW: Petition 2023-09-01-05 - 37739 Seven Mile Road.pdf
Date:	Monday, September 25, 2023 7:40:31 PM
Attachments:	CitySeal100x100_8f7d9122-2022-4a3b-86d9-f05a096c6a3c.png SocialLink_Youtube_32x32_9b8afb50-3b86-4678-b53d-7e423a9d8771.png SocialLink_Twitter_32x32_a844deab-cb87-48f2-9175-647012b70cfe.png Livonia-Logo-250_2521acb0-d42c-429b-900f-b59ac98c1049.png SocialLink_Facebook_32x32_15fe2196-de42-486f-ac8c-bd89c9da8fd7.png

---

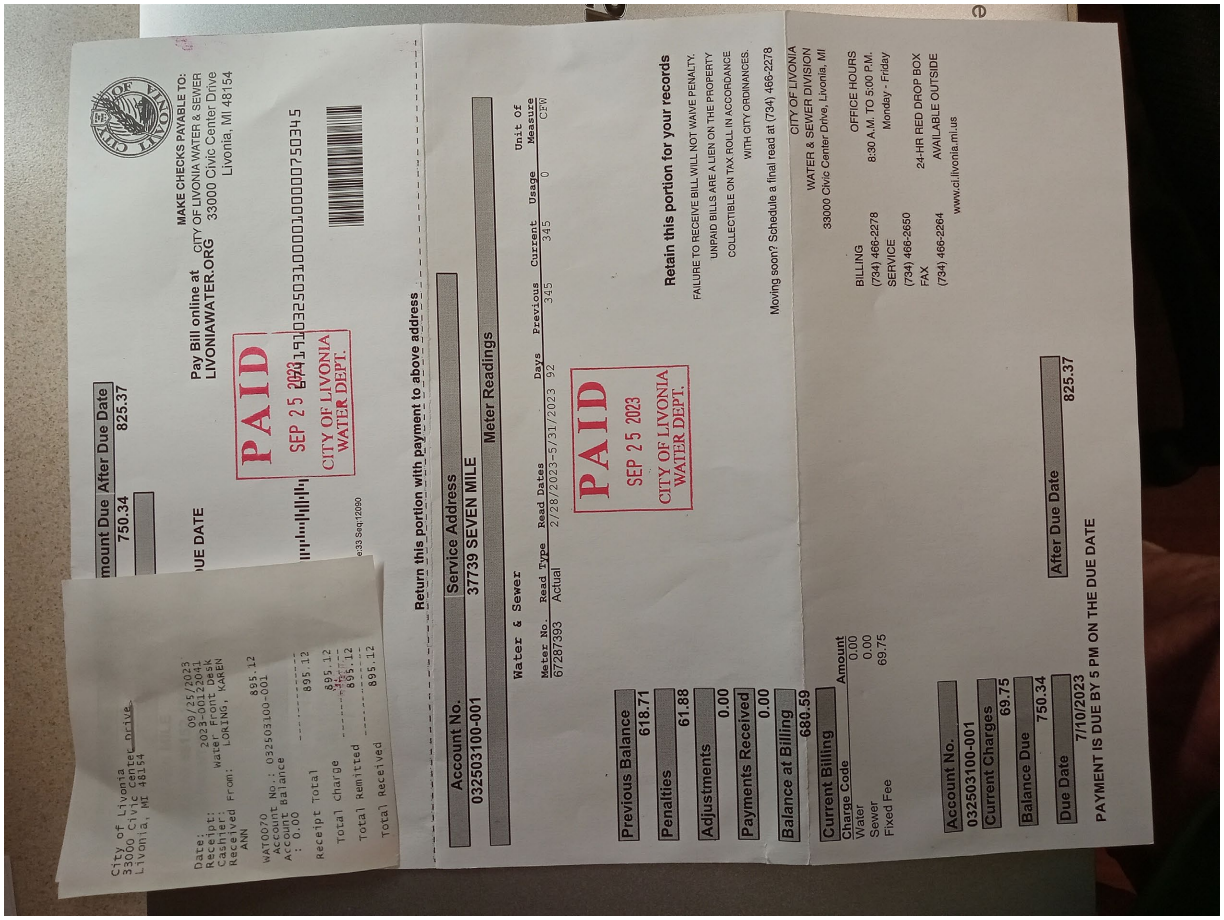

City of Livonia
33000 Civic Center Drive
Livonia, MI 48154

Date: 09/18/2023
Receipt: 2023012041
Cashier: Front Desk
Received From: LOKING, KAREN ANN

WAT0070 Account No.: 032503100-001
Account Balance : 0.00 895.12

Receipt Total 895.12
Total Charge 895.12
Total Remitted 895.12
Total Received 895.12

Amount Due | After Due Date
750.34 | 825.37

DUE DATE

Pay Bill online at LIVONIAWATER.ORG

MAKE CHECKS PAYABLE TO:
CITY OF LIVONIA WATER & SEWER
33000 Civic Center Drive
Livonia, MI 48154

PAID
SEP 25 2023
CITY OF LIVONIA WATER DEPT.

Return this portion with payment to above address

Account No.	Service Address
032503100-001	37739 SEVEN MILE

Water & Sewer — Meter Readings

Meter No.	Read Type	Read Dates	Days	Previous	Current	Usage	Unit Of Measure
67287393	Actual	2/28/2023-5/31/2023	92	345	345	0	CFW

PAID
SEP 25 2023
CITY OF LIVONIA WATER DEPT.

Previous Balance	618.71
Penalties	61.88
Adjustments	0.00
Payments Received	0.00
Balance at Billing	680.59

Current Billing	Amount
Charge Code	
Water	0.00
Sewer	0.00
Fixed Fee	69.75

Account No.	032503100-001
Current Charges	69.75
Balance Due	750.34
Due Date	7/10/2023
After Due Date	825.37

PAYMENT IS DUE BY 5 PM ON THE DUE DATE

Retain this portion for your records

FAILURE TO RECEIVE BILL WILL NOT WAIVE PENALTY.
UNPAID BILLS ARE A LIEN ON THE PROPERTY
COLLECTIBLE ON TAX ROLL IN ACCORDANCE
WITH CITY ORDINANCES.

Moving soon? Schedule a final read at (734) 466-2278

CITY OF LIVONIA
WATER & SEWER DIVISION
33000 Civic Center Drive, Livonia, MI

BILLING (734) 466-2278
SERVICE (734) 466-2650
FAX (734) 466-2264

OFFICE HOURS
8:30 A.M. TO 5:00 P.M.
Monday - Friday

24-HR RED DROP BOX
AVAILABLE OUTSIDE
www.ci.livonia.mi.us

Justin DiNatale
Business Development

Cell: 734-497-6635 | Office: 734-838-5900
36959 Amrhein Rd. Livonia, MI 48150
www.matickconstruction.com

On Mon, Sep 25, 2023 at 8:44 AM Miller, Scott <smiller@livonia.gov> wrote:

> Attached is correspondence from the City's Department of Finance indicating that there are unpaid water and sewer charges due for 37739 Seven Mile Road. The City will not render any decision on your proposed rezoning request until this is resolved. Please email the Planning Department (planning@livonia.gov) a copy of the paid receipt.

OFFICE OF THE TREASURER

LYNDA L. SCHEEL
CITY TREASURER

33000 CIVIC CENTER DRIVE
LIVONIA, MICHIGAN 48154-3060
(734) 466-2245
FAX: (734) 421-7230

RECEIVED
OCT 03 2023
CITY OF LIVONIA
PLANNING COMMISSION

October 1, 2023

Mr. Scott Miller – Planner IV
Planning Commission
City of Livonia

Re: Petition 2023-09-01-05 37739 Seven Mile Road

Dear Mr. Miller,

In accordance with your request, the Treasurer's Office has reviewed the name and addresses connected with the above noted petition. At this time there are taxes due, and they are delinquent. ALL taxes for this location that are on the 2023 tax roll will need to be paid before the demolition of the building.

Sincerely,

Lynda L. Scheel

Lynda L. Scheel
Treasurer, City of Livonia

LORING KAREN ANN | CITY OF LIVONIA | 2023 Summer | 025 01 0001 000

MESSAGE TO TAXPAYER

VISIT WWW.LIVONIATAX.ORG FOR TAX AND PAYMENT INFORMATION. THIS INFORMATION MAY BE PRINTED DIRECTLY FROM THE WEBSITE. WE RESERVE THE RIGHT TO CHARGE FOR DUPLICATES. WHEN PAYING BY CHECK, INCLUDE YOUR PHONE NUMBER AND PARCEL NUMBER. PLEASE USE ONLY THE 33000 CIVIC CENTER DRIVE, LIVONIA, MI 48154-3060 ADDRESS FOR MAILING CHECK PAYMENTS FOR TAXES.

PAYMENT INFORMATION

This tax is due by: **09/14/2023**

Pay by mail to: CITY OF LIVONIA
TREASURER'S OFFICE
33000 CIVIC CENTER DRIVE
LIVONIA, MI 48154-3060

Do not combine tax payments with other payments due to the City of Livonia. Payment for taxes must be on a separate check.

See reverse side for additional information

PROPERTY INFORMATION

Property Assessed To:
LORING KAREN ANN
37739 SEVEN MILE
LIVONIA, MI 48152

Prop #: 025 01 0001 000 School: LIVONIA PUBLIC
Prop Addr: 37739 SEVEN MILE
Legal Description:
07A1 MELODY MANOR T1S R9E L72 P43 WCR LOT 1

RECEIVED
OCT 03 2023
CITY OF LIVONIA
PLANNING COMMISSION

TAX DETAIL

Taxable Value: 69,644 RESIDENTIAL-
State Equalized Value: 102,800 Class: 401
PRE/MBT %: 0.0000

Sent to: PROPERTY OWNER

DESCRIPTION	MILLAGE	AMOUNT
SCHOOLCRAFT CC	2.27000	158.09
WAYNE CNTY OPER	5.60990	390.69
SCHOOL DEBT	2.05000	142.77
CNTY ISD SPEC ED	3.34430	232.91
STATE EDUCATION	6.00000	417.86
SCH SINKING FUND	0.78830	54.90
SCHOOL OPERATING	9.00000	626.79
CNTY ISD OPER	0.09560	6.65
WCRESA ENHANCE	1.98760	138.42
Total Tax	31.14570	2,169.08
Administration Fee		0.00
Interest:		43.38
TOTAL AMOUNT DUE		2,212.46

OPERATING FISCAL YEARS

The taxes on bill will be used for governmental operations for the following fiscal year(s):

County:	OCTOBER 01 - SEPTEMBER 30
Twn/Cty:	DECEMBER 01 - NOVEMBER 30
School:	JULY 01 - JUNE 30
State:	OCTOBER 01 - SEPTEMBER 30

Does NOT affect when the tax is due or its amount

RETAIN THIS PORTION FOR YOUR RECORDS.

The below original stub required for payment processing. Please detach along perforation. Keep the top portion for your records.

Sent to: **PROPERTY OWNER**

Pay this tax to:
CITY OF LIVONIA
TREASURER'S OFFICE
33000 CIVIC CENTER DRIVE
LIVONIA, MI 48154-3060

PLEASE RETURN THIS PORTION WITH PAYMENT OR THE ENTIRE BILL WITH SASE FOR A PAID RECEIPT

This tax is due by: **09/14/2023**
After 09/14/2023 additional interest and fees apply

2023 Summer Tax for Prop #: 025 01 0001 000

TAXPAYER NOTE: Are your name & mailing address correct? If not, please contact the Assessor's Office. Thank You.
Property Addr: 37739 SEVEN MILE

(Partial payments are accepted)
Make Check Payable To: **CITY OF LIVONIA**

TOTAL AMOUNT DUE: 2,212.46

Amount Remitted: _____

Check# _____

Cash _____

To: LORING KAREN ANN
21555 HAGGERTY STE 121
NOVI MI 48375

LORING KAREN ANN CITY OF LIVONIA 2023 Summer 025 01 0001 000

MESSAGE TO TAXPAYER

VISIT WWW.LIVONIATAX.ORG FOR TAX AND PAYMENT INFORMATION. THIS INFORMATION MAY BE PRINTED DIRECTLY FROM THE WEBSITE. WE RESERVE THE RIGHT TO CHARGE FOR DUPLICATES. WHEN PAYING BY CHECK, INCLUDE YOUR PHONE NUMBER AND PARCEL NUMBER. PLEASE USE ONLY THE 33000 CIVIC CENTER DRIVE, LIVONIA, MI 48154-3060 ADDRESS FOR MAILING CHECK PAYMENTS FOR TAXES.

PAYMENT INFORMATION

This tax is due by: 09/14/2023

Pay by mail to: CITY OF LIVONIA
TREASURER'S OFFICE
33000 CIVIC CENTER DRIVE
LIVONIA, MI 48154-3060

Do not combine tax payments with other payments due to the City of Livonia. Payment for taxes must be on a separate check.

See reverse side for additional information

PROPERTY INFORMATION

Property Assessed To:
LORING KAREN ANN
37739 SEVEN MILE
LIVONIA, MI 48152

Prop #: 025 01 0001 000 School: LIVONIA PUBLIC
Prop Addr: 37739 SEVEN MILE
Legal Description:
G7A1 MELODY MANOR T1S R9E L72 P43 WCR LOT 1

PAID
OCT 03 2023
TREASURER'S OFFICE
CITY OF LIVONIA

TAX DETAIL

Taxable Value: 69,644 RESIDENTIAL
State Equalized Value: 102,800 Class: 401
PRE/MBT %: 0.0000

Sent to: PROPERTY OWNER

DESCRIPTION	MILLAGE	AMOUNT
SCHOOLCRAFT CC	2.27000	158.09
WAYNE CNTY OPER	5.60990	390.69
SCHOOL DEBT	2.05000	142.77
CNTY ISD SPEC ED	3.34430	232.91
STATE EDUCATION	6.00000	417.86
SCH SINKING FUND	0.78830	54.90
SCHOOL OPERATING	9.00000	626.79
CNTY ISD OPER	0.09560	6.65
WCRESA ENHANCE	1.98760	138.47
Total Tax	31.14570	2,169.08
Administration Fee		0.00
Interest		43.38
TOTAL AMOUNT DUE		2,212.46
PREV. PAYMENTS		
BALANCE DUE		2,212.46

OPERATING FISCAL YEARS

The taxes on bill will be used for governmental operations for the following fiscal year(s):

County: OCTOBER 01 - SEPTEMBER 30
Twn/City: DECEMBER 01 - NOVEMBER 30
School: JULY 01 - JUNE 30
State: OCTOBER 01 - SEPTEMBER 30

Does NOT affect when the tax is due or its amount

RETAIN THIS PORTION FOR YOUR RECORDS.

OTHER ITEMS RELATED TO THE PETITION

NEW DATA RECEIVED FOR THE STUDY MEETING OF MAY 19, 2025

From: noreply@civicplus.com
To: CityCouncil
Subject: Online Form Submittal: City Council Inquiries
Date: Thursday, May 15, 2025 1:27:03 PM

City Council Inquiries

This form is for any questions, comments, or concerns you may have for the City in regards to city council meetings or other city council inquiries. If you leave contact information, the City will reply within 2 business days. If this is an emergency, please dial 9-1-1.

First Name	Erik
Last Name	Kuszynski
Address	37734 Pickford Dr.
Email Address	erikkuszynski@gmail.com
Phone Number	313-378-6794
Topic	City Council Meetings
Date of Issue	5/15/2025
Attachment (Optional)	*Field not completed.*
Comments	I am writing with respect to two petitions that will be before the council on Monday May 19th. Unfortunately I will not be able to attend the meeting in person, but I wanted to express my opinion to the council. The first is Item 10 on the agenda, the petition by Leo Sove to build an office building at 37739 Seven Mile Rd. I was the person who worked with Leo and former councilman Joe Laura to address the concerns of residents when the existing office building to the west was constructed. Although the majority of the residents were not in favor of the development, I was relieved that Leo was open to making some modifications to his site plan to address some of the residents' concerns. In hindsight, I haven't seen any problems with the building and I appreciate that Leo is a responsible and responsive landlord. After watching the planning commission meeting on this development and reviewing the site plans myself, I am in favor of this plan, subject to the concerns that we brought up at the planning commission meeting. The only comment I would have is that the landscape plan calls for white pine trees to be planted on the south side of the property. There are above ground utility lines at that location and knowing that mature white pine trees are tall and tend to drop limbs in severe winds, I think a different

species of tree or shrub may be a better fit for that location. Other than that, I think this is a fine plan and I look forward to this parcel being used.

The other item I would like to speak in support of is item 8, the BMW motorcycle dealership on the site of the former Doc's Sports Retreat. I think the planning commission did a fine job of looking at the pertinent issues. I was not impressed with the petitioner's preparation for this particular presentation. They seemed to be a little short on some details, but I applaud the planning commission for asking for clarification. Nevertheless, I do believe that this proposal should be approved subject to the respective city departments reviewing the items such as signage, lighting and landscaping.

Thank you for your time and I look forward to both these projects moving forward.

Sincerely,
Erik Kuszynski
37734 Pickford Dr.
Livonia, MI 48152

Email not displaying correctly? View it in your browser.

LETTER TO THE LIVONIA CITY COUNCIL

10.

Planning
May 2, 2025

MEETING DATE	PRESENTED BY
S051925/R060225	Mark Taormina, Planning and Economic Development Director

AGENDA ITEM

SITE PLAN PETITION: Planning Commission, re: Petition 2025-03-08-04 submitted by Leo Soave Building Inc., requesting to construct a one-story office building at 37739 Seven Mile Road, located on the south side of Seven Mile Road between Blue Skies Drive and Glengarry Drive in the Northeast ¼ of Section 7.

BACKGROUND DETAILS

May 2, 2025

Honorable Members of the City Council
City of Livonia, Michigan

Re: Petition 2025-03-08-04 – Leo Soave Building

Dear Council Members:

At the 1,229th Meeting held by the Livonia City Planning Commission on April 29, 2025, the following resolution was adopted:

PREFERRED COUNCIL RECOMMENDATION/RESOLUTION (Please complete this field. Attachments are not to be used in lieu of the recommendation)

#04-16-2025 RESOLVED, That the Planning Commission does hereby recommend to the City Council that on Petition 2025-03-08-04 submitted by Leo Soave Building Inc., under Section 13.13 of the Livonia Zoning Ordinance, requesting approval to construct a one-story office building at 37739 Seven Mile Road, located on the south side of Seven Mile Road between Blue Skies Drive and Glengarry Drive in the Northeast ¼ of Section 7, be approved subject to the following conditions:

1. That the General Site Plan, identified as Sheet 1 of 3, dated March 17, 2025, as revised, prepared by Arpee/Donnan, Inc., is hereby approved and shall be adhered to, with the exception that the masonry wall shown on the west side of the site shall be removed.

2. That the Elevations Plan, identified as Sheets A-2 and A-3, prepared by John T. Holowicki, is hereby approved and shall be adhered to.

3. That the Landscape Plan, identified as Sheet 2 of 3, prepared by Arpee/Donnan Inc., dated March 17, 2025, is hereby approved and shall be adhered to.

4. Parking spaces shall be doubled striped at ten feet (10') wide by twenty feet (20') in length.

5. That all exterior light fixtures shall not exceed twenty feet (20') in height and shall be aimed and shielded to minimize stray light trespassing across property lines and glaring into adjacent roadway.

6. That this site shall meet either the City of Livonia or the Wayne County Storm Water Management Ordinance, whichever applies, and shall secure any required permits, including soil erosion and sedimentation control permits.

7. All disturbed lawn areas, including road rights-of-way, shall be sodded instead of hydroseeding.

8. Underground sprinklers shall be installed for all landscaped and sodded areas. All planted materials shall be installed to the satisfaction of the Inspection Department and permanently maintained in a healthy condition.

9. That no LED lightband or exposed neon shall be permitted on this site including, but not limited to, the building or around the windows.

10. That the specific plans referenced in this approving resolution shall be submitted to the Inspection Department at the time the building permits are applied for; and

11. Pursuant to Section 13.13 of the Livonia Zoning Ordinance, as amended, this approval is valid for a period of one year only from the date of approval by the City Council, and unless a building permit is obtained, this approval shall be null and void at the expiration of said period.

ATTACHMENTS

1. S051925 LTC 2025-03-08-04, Leo Soave Building
2. 2025-03-08-04_E-COUNCIL Pkt

APPROVED BY

Date: May 05, 2025

Mark Taormina, Planning and Economic Development Director

Date: May 07, 2025

Maureen Miller Brosnan, Mayor

CITY OF LIVONIA, MICHIGAN
APPLICATION FOR SITE PLAN REVIEW & APPROVAL

All petitions for Site Plan Approval shall be filed with the City Planning Commission, 33000 Civic Center Drive, Livonia, MI 48154-3097.

For filing fee see computation below

Date Filed: 03-20-2025 Petition 2025-03-08-04

Site Address: 37739 Seven Mile Rd Sidwell 025-01-0001-000

Requesting Approval to _____

Applicant: Leo Soave Business/Company: Leo Soave Building, Inc.

Applicant's Address: 37771 Seven Mile Rd City: Livonia State: MI Zip Code: 48152

Applicant's Phone # (586) 219-7880 Applicant's Email LeoSoaveBuilding@gmail.com

Contact Person: Leo Soave Business/Company: Leo Soave Building, Inc.

Contact's Address: 37771 Seven Mile Rd City: Livonia State: MI Zip Code: 48152

Contact's Phone # (586) 219-7880 Contact's Email LeoSoaveBuilding@gmail.com

Please provide the following information:

1) **Site Plan** showing:
   - property dimensions, including road right-of-way & building setback lines
   - foot print of building(s), including dimensions & square footage
   - all easements, protective walls, sidewalks & existing trees
   - any significant topographic features (existing or proposed)
   - parking layout, including type of surface material, sizes of spaces & aisles
   - method used in calculating parking requirement
   - location of light standards servicing parking lot & cutout showing type & height
   - location of trash receptacle, including description of screening
   - location of signs (if proposed must submit separate sign application)
2) **Detailed Landscape Plan** including:
   - listing or labeling of all planted materials as to type and size
   - areas to be fully irrigated
   - percentage of landscaping provided (15% of total site required)
3) **Building Elevation Plan** depicting:
   - architectural quality
   - wall section & detail plan - exterior building materials must be labeled (i.e. brick, thin brick, E.F.I.S.)
   - all visible rooftop mechanical equipment and how they will be screened
4) **General Floor Plan** showing:
   - floor layout
   - entrances & exits
   - restaurants are required to illustrate seating arrangement & capacity
5) **One (1) set of reduced plans** (i.e. site, landscape, elevation, floor), **a maximum 11" x 17" in size, or digital file in a .pdf format either on CD or emailed to**: planning@livonia.gov
6) **Legal Description** of the property to be considered (Clearly Printed)
7) One (1) completed application form & **three (3)** sets of full-size drawings

RECEIVED
MAR 21 2025
CITY OF LIVONIA
PLANNING COMMISSION

You are invited and encouraged to review your proposal with the Planning Department staff. Only one set of preliminary drawings will be necessary for this analysis.

FEE COMPUTATION **$600.00**

_____ sq. ft. of new construction x $20.00 per 1,000 sq. ft.
(**NOTE**: Round off to nearest 1,000) + _____
Total Amount Due $ _____

Owner of Property: Leo Soave Building, Inc.

Owner's Address: 37771 Seven Mile Rd City: Livonia State: MI Zip Code: 48152

Owner's Phone # (586) 219-7880 Owner's Email LeoSoaveBuilding@gmail.com

Signature of Owner: _____ Print Name: Leo Soave

UNAPPROVED MINUTES

MINUTES OF THE 1,229th PUBLIC HEARINGS AND REGULAR MEETING HELD BY THE CITY PLANNING COMMISSION OF THE CITY OF LIVONIA

On Tuesday, April 29, 2025, the City Planning Commission of the City of Livonia held its 1,229th Public Hearing and Regular Meetings in the Livonia City Hall, 33000 Civic Center Drive, Livonia, Michigan.

Mr. Ian Wilshaw, Chairman, called the meeting to order at 7 p.m.

Members present:	Wafa Dinaro	Patrick Droze	Sam Caramagno
	Glen Long	Peter Ventura	Ian Wilshaw

Members absent: David Bongero

Mr. Jacob Uhazie, Planning Director, and Stephanie Reece, Program Supervisor, were also present.

Chairman Wilshaw informed the audience that if a petition on tonight's agenda involves a rezoning request, this Commission makes a recommendation to the City Council who, in turn, will hold its own public hearing and make the final determination as to whether a petition is approved or denied. The Planning Commission holds the only public hearing on a request for preliminary plat and/or vacating petition. The Commission's recommendation is forwarded to the City Council for the final determination as to whether a plat is accepted or rejected. If a petition requesting a waiver of use or site plan approval is denied tonight, the petitioner has ten days in which to appeal the decision, in writing, to the City Council. Resolutions adopted by the City Planning Commission become effective seven (7) days after the date of adoption. The Planning Commission and the professional staff have reviewed each of these petitions upon their filing. The staff has furnished the Commission with both approving and denying resolutions, which the Commission may, or may not, use depending on the outcome of the proceedings tonight.

ITEM #2 PETITION 2025-03-08-04 Leo Soave

Mr. Caramagno, Secretary, announced the first item on the agenda, Petition 2025-03-08-04 submitted by Leo Soave Building Inc., under Section 13.13 of the Livonia Zoning Ordinance, requesting approval to construct a one-story office building at 37739 Seven Mile Road, located on the south side of Seven Mile Road between Blue Skies Drive and Glengarry Drive in the Northeast ¼ of Section 7.

Mr. Uhazie: Thank you, Mr. Chairman. This petition started the rezoning process under petition, 2023-09-01-05 and it was originally submitted by Matick Construction, LLC, for rezoning from N2 (Neighborhood) to C-1 (Local business). The petition had a public hearing and was given first reading on December 4, 2023. The rezoning would allow Leo Soave Buildings Incorporated to build a two-unit, 2,592 square foot office building with a basement. General office buildings are permitted in the C-1 zoning district, West of the subject site is an office building occupied by Farmers Insurance Agency, which is zoned C-1. East and south are residential properties zoned N2. North, across Seven Mile Road is a vacant property zoned RUF that recently received site plan approval for the 100 West Townhome apartments. The subject parcel measures approximately 80 feet in width along Seven Mile Road by a depth of 150 feet. The land area is 12,000 square feet, or roughly 0.28 acres. The subject property is currently vacant. In a C-1 district, the minimum required front yard setback for a building is 15 feet. The proposed building would sit back approximately 65 feet from Seven Mile Road. The minimum required rear yard setback is 20 feet. The office building appears to be approximately 30 feet from the southern property line. The side yard setback from the residential district to the east is 20 feet, and the building would be approximately 20.78 feet from the eastern property line. Where the property abuts C-1 zoning along the west, the ordinance allows for a zero-setback subject to applicable building and fire codes. The site plan shows that the building would be setback five feet from the western property line. The building appears to comply with all minimum required setback regulations. The required parking for an office building is one space for each 200 square feet of floor area. A structure of this size would require 10 parking spaces. The preliminary site plan shows 10 parking spaces, including one barrier free. Access to the site would be from a single drive off of Seven Mile Road. The landscape plan submitted shows 15 white pine trees planted along the abutting residential properties, two Golden Rain trees and two American Horn Beam trees at the parking lot entrance, two Star magnolia trees and six Gold Flame Sapira shrubs at the front of the building. A seed bio retention area with short grass prairie seed mix along the east and south sides are located along the proposed building. A six-foot-high vinyl fence is proposed along the west and southern side of the property, where it is adjacent to residential. And the elevation plans show a brick building with a pitched asphalt roof. There is a covered main entryway supported by columns with a horizontal hardy board gabled roof

above. You can see the side profile here, showing the porch and columns. With that, Mr. Chairman, I can read out the departmental correspondence. With that, Mr. Chairman, I can read out the departmental correspondence.

Mr. Wilshaw: Yes, please.

Mr. Uhazie: Mr. Uhazie: The first item is from the Engineering Division, dated April 3, 2025, which reads as follows: *"In accordance with your request, the Engineering Division has reviewed the above referenced petition. We have no objections to the proposed rezoning at this time, but would like to note the following items: 1. The subject parcel is assigned the address of #37739 Seven Mile Road. Should additional addresses be needed, the Owner will need to contact this Department once approvals have been obtained. 2. The existing parcel currently has access to public sanitary sewer, storm sewer and water main. The drawings do not provide any calculations for proposed flows from the development, so we cannot comment on impacts to the existing systems at this time. The owner shall submit drawings to this department once site plan approval has been granted for a complete Engineering review and permitting. Based on what has been provided, we have the flowing comments regarding the utilities: i) Water Main: There is an existing 12" water main on the south side of Seven Mile Road for a service connection to the proposed building. ii) Sanitary sewer: There is an existing 6" sanitary lead to the parcel. If the developer is intending to re-use this service, they will be required to clean and televise it prior to any approvals. If the existing lead is not in a useable condition, they will be required to install a new lead and abandon the existing one. iii) Storm Sewer: Detention is shown as proposed on the submitted drawings, but no other information is shown. Storm Sewer will need to meet the Wayne County Storm Ordinance requirements and will be subject to Wayne County review. 3. Any disturbances within the Seven Mile Road right-of-way will require permits through the Wayne County Department of Public Service, including driveway approach and sidewalk removals and placements."* The letter is signed by David W. Lear, P.E., Assistant City Engineer. The next letter is from the Livonia Fire & Rescue Division, dated April 25, 2025, which reads as follows: *"This office has reviewed the site plan submitted in connection with a re quest to construct a commercial building on property located at the above referenced address. We have no objections to this proposal. A*

further detailed plan review will take place when this division receives an official plan set." The letter is signed by Brian Kukla, Fire Marshal. The next letter is from the Division of Police, dated March 25, 2025, which reads as follows: *"I have reviewed the plans in connection with the petition. I have no objections to the proposal."* The letter is signed by Paul Walters, Sergeant, Traffic Bureau. The next letter is from the Inspection Department, dated April 21, 2025, which reads as follows: *"Pursuant to your request, the above-referenced Petition has been reviewed. 1. The west wall of the proposed structure is shown to be 5 feet from the property line. This will require the exterior wall to have a minimum of a one-hour fire rating, including any openings in that wall. 2. The single barrier-free parking space is required to be van accessible and shall have a minimum of an eight-foot hashed, accessible area. The proposed parking space only shows a five-foot hashed area. This Department has no further objections to this Petition."* The letter is signed by Jerome Hanna, Director of Inspection. The next letter is from the Finance Department, dated April 14, 2025, which reads as follows: *"I have reviewed the addresses connected with the above noted petition. As there are no outstanding amounts receivable, general or water and sewer, I have no objections to the proposal."* The letter is signed by Connie Kumpula, Chief Accountant. Next, an email from the Treasurer's Department, dated April 28, 2025, which reads as follows: *"The taxes are current."* The letter is signed by Susie Nash, Treasurer. That is the extent of the correspondence.

Mr. Wilshaw: Okay. Thank you, Mr. Uhazie. Is there any questions for our planning staff? I don't see any questions. Our petitioner is in the audience, feel free to come forward. We'll ask that you start with your name and address for the record.

Joe Edeau, 12283 Merriman Road, Livonia, MI. I'm representing Leo Soave.

Mr. Wilshaw: Thank you for being here. Mr. Edeau, what would you like to tell us about this proposal?

Mr. Edeau: Mr. Soave owns the commercial building next door, and he just kind of wants to mirror it, but it's not as big as the other one, and we all know Leo, he just, he does good work around the city. So it's going to be a nice office building. It'll be…it's going to be low use. It's not going to be like a high traffic, like a doctor's office or anything like that.

Mr. Wilshaw: Okay, excellent. Let's see if there's any questions for you from any of our commissioners. Any questions for our petitioner's representative? Go ahead. Mr. Droze.

Mr. Droze: One question I had on the bioretention that's on this project. It's a fairly small site. Is it included just as part of landscaping, or is it, is it providing, you know, basically, is it providing water quality improvements?

Me. Edeau: I don't know about water quality improvements, but it's for, you know, management of water when you have heavy rainfall.

Mr. Droze: Sure, and I guess what I'm just wondering on is, typically the county only requires that if you're over an acre in size, and so I'm just…it's pretty close to the building and I guess it was just a question. Maybe it's more of the engineering team to look into, but just with how small that site is, it's…I guess maybe flag that is something maybe not required.

Mr. Edeau: Don't worry about Wayne County.

Mr. Droze: I know you got to talk to them about the driveway.

Mr. Edeau: Sure, the other two things that were mentioned, you know, like, we have to scope the sanitary, make sure the lead is still in good condition and there's no failure in it. And if there is, of course, we have to do a new tap, and we'd have to go to Wayne County to get that, because it's Seven Mile Road, you know.

Mr. Droze: Okay, those are just, I guess, a couple questions on the bioretention. I'm glad to see it, but I'm just curious what was driving it.

Mr. Edeau: Thank you.

Mr. Wilshaw: Excellent. Thank you. Mr. Droze. Any other questions for our petitioner? Mr. Ventura.

Mr. Ventura: Good evening. Last week, one of the members here, I'm not sure who it was, asked about the block wall to the west and. Of this side into the east of the existing building, and whether it was going to be removed, and I thought you answered in the affirmative.

Mr. Edeau: As Reagan said, we're going to tear down that wall.

Mr. Ventura: Okay, so it's coming down. Great. Thank you. So, I'd like to ask a question. If I look at the site plan correctly, and I'm not sure that I do, it appears that that wall is shown as a masonry wall on the site plan. Patrick, am I right? There's a masonry wall.

Mr. Uhazie: Give me a second. I have it zoomed in so I can't quite see.

Mr. Edeau: It was the intent from the petitioner, even if it wasn't asked, that he was going to tear down the wall anyway. Yeah, because it looked a lot nicer with it gone.

Mr. Uhazie: I agree the site plan does show an existing wall.

Mr. Wilshaw: Any other questions for the petitioner? Anyone in the audience wishing to speak on this item? I don't see anybody. Just one question for you, sir, Mr. Edeau, you heard the reference to the handicapped parking space needing to be wider. Is there adequate room for you to make that ramp space and not lose a parking space?

Mr. Edeau: You know, I believe there is yes. And of course, we'll take it up with Engineering and in the Building Department. We still have to submit plans, and if it doesn't jive with all the requirements, of course, they'll get kicked back, and then we'd have to make adjustments. But yeah, we do have room.

Mr. Wilshaw: Okay, the reason I ask is I think you're right at the minimum for parking right now, at 10 spaces, so if you lose one, then you may need to get a waiver for being under parking, so I just wanted to ask that question and see if you're aware of that. Okay, excellent. If there's nothing else from anybody on the commission, then I think a motion would be in order, anything else that you wanted to add before we make our decision.

Mr. Edeau: No, I'm good. Thank you.

Mr. Wilshaw: Awesome. Thank you. Then a motion would be in order.

On a motion by Ventura seconded by Droze and unanimously adopted, it was

#04-16-2025 ***RESOLVED***, That the Planning Commission does hereby recommend to the City Council that on Petition 2025-03-08-04 submitted by Leo Soave Building Inc., under Section 13.13 of the Livonia Zoning Ordinance, requesting approval to construct a one-story office building at 37739 Seven Mile Road, located on the south side of Seven Mile Road between Blue Skies Drive

and Glengarry Drive in the Northeast ¼ of Section 7, be approved subject to the following conditions:

1. That the General Site Plan, identified as Sheet 1 of 3, dated March 17, 2025, as revised, prepared by Arpee/Donnan, Inc., is hereby approved and shall be adhered to, with the exception that the masonry wall shown on the west side of the site shall be removed.

2. That the Elevations Plan, identified as Sheets A-2 and A-3, prepared by John T. Holowicki, is hereby approved and shall be adhered to.

3. That the Landscape Plan, identified as Sheet 2 of 3, prepared by Arpee/Donnan Inc., dated March 17, 2025, is hereby approved and shall be adhered to.

4. Parking spaces shall be doubled striped at ten feet (10') wide by twenty feet (20') in length.

5. That all exterior light fixtures shall not exceed twenty feet (20') in height and shall be aimed and shielded to minimize stray light trespassing across property lines and glaring into adjacent roadway.

6. That this site shall meet either the City of Livonia or the Wayne County Storm Water Management Ordinance, whichever applies, and shall secure any required permits, including soil erosion and sedimentation control permits.

7. All disturbed lawn areas, including road rights-of-way, shall be sodded instead of hydroseeding.

8. Underground sprinklers shall be installed for all landscaped and sodded areas. All planted materials shall be installed to the satisfaction of the Inspection Department and permanently maintained in a healthy condition.

9. That no LED lightband or exposed neon shall be permitted on this site including, but not limited to, the building or around the windows.

10. That the specific plans referenced in this approving resolution shall be submitted to the Inspection Department at the time the building permits are applied for; and

11. Pursuant to Section 13.13 of the Livonia Zoning Ordinance, as amended, this approval is valid for a period of one year only from the date of approval by the City Council, and unless a building permit is obtained, this approval shall be null and void at the expiration of said period.

Mr. Wilshaw: Is there any discussion?

Mr. Wilshaw, Chairman, declared the motion is carried and the foregoing resolution adopted. It will go on to the City Council with an approving resolution.

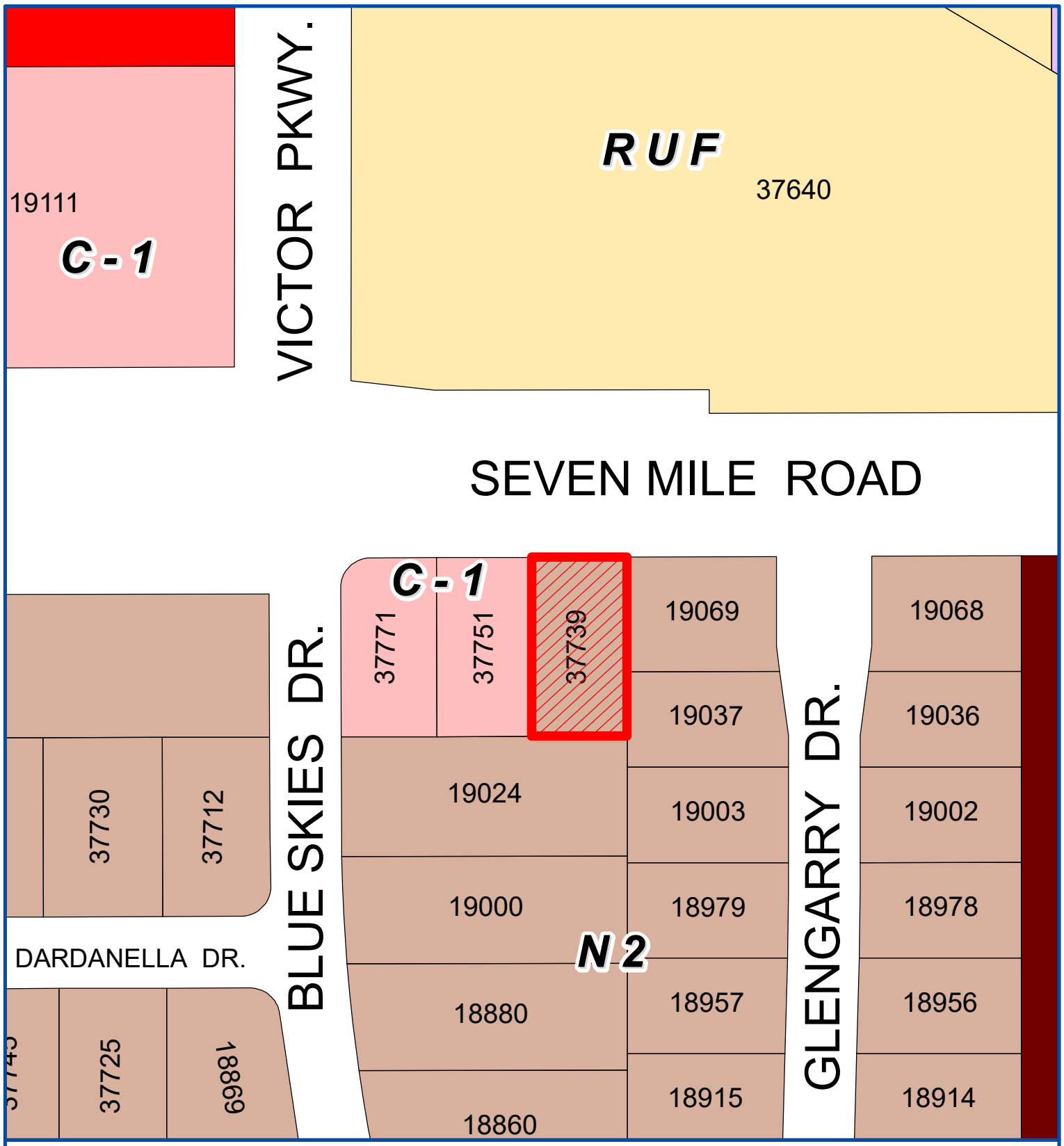

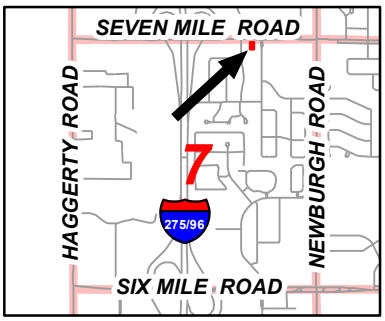

Address & Zoning Map

Petition 2025-03-08-04
Soave Building Company
37739 Seven Mile Road
Parcel to be Rezoned N2 to C-1

N

Not to Scale

City of Livonia
Planning Department

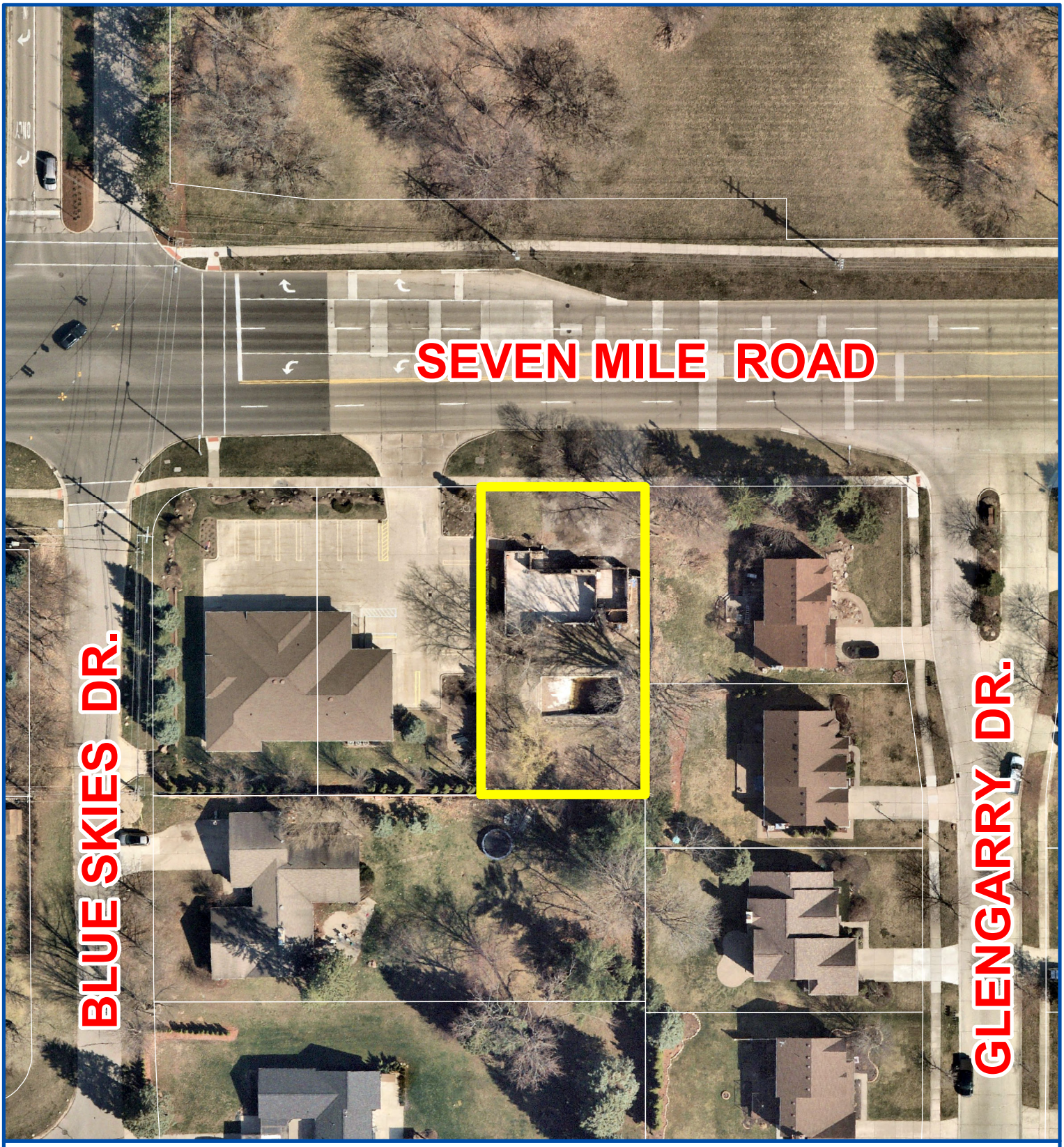

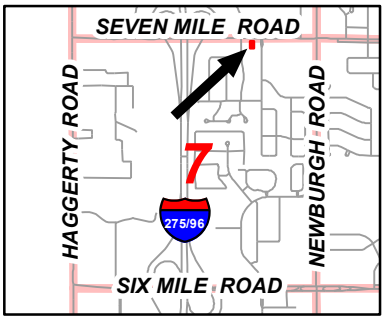

Aerial Map

Petition 2025-03-08-04
Soave Building Company
37739 Seven Mile Road

N

Not to Scale

City of Livonia
Planning Department

PLANNING COMMISSION STAFF NOTES

MISCELLANEOUS

ITEM 3

Petition 2025-03-08-04 submitted by Leo Soave Building Inc., under Section 13.13 of the Livonia Zoning Ordinance, requesting approval to construct a one-story office building at 37739 Seven Mile Road, located on the south side of Seven Mile Road between Blue Skies Drive and Glengarry Drive in the Northeast ¼ of Section 7.

April 22, 2025: Study Meeting:

This site plan petition involves a parcel on the south side of Seven Mile Road between Blue Skies Drive and Glengarry Drive. The parcel measures approximately eighty feet (80') in width along Seven Mile Road by a depth of 150 feet for a land area of 12,000 square feet or roughly 0.28 acres. The subject property is vacant.

The site has started the rezoning process under petition 2023-09-01-05 submitted by Matick Construction L.L.C. from N2 (Neighborhood) to C-1 (Local Business). The petition had a public hearing and was given first reading on December 4, 2023. The rezoning would allow Leo Soave Building Inc. to build a 2,592 square-foot office building with a basement. General office buildings are a permitted use in the C-1 zoning district.

Immediately west of the subject site is an office building occupied by a Farmer Insurance Agency, zoned C-1. To the east and south are residential properties zoned N2. To the north, across Seven Mile Road, is a vacant property zoned RUF, Rural Urban Farm.

The required parking for a general office building is one (1) space for each 200 square feet of floor area. A structure of this size (2,592 x 80% ÷ 200) would require ten (10) parking spaces. The preliminary site plan shows ten (10) parking spaces including one (1) barrier free space. Access to the site would be from a single drive off Seven Mile Road.

In a C-1 district, the minimum required front yard setback for a building is fifteen feet (15'). The proposed building would set back approximately sixty-five feet (65') from Seven Mile Road. The minimum required setback for the rear yard is twenty feet (20'); in this case, the office building appears to be approximately thirty feet (30') from the south property line. The minimum side yard setback from the residential district to the east is twenty feet (20'). The building would be approximately 20.78 feet from the east property line. Where the property abuts C-1 zoning along the west, the Ordinance allows for a zero-setback subject to applicable building and fire codes. The site plan shows that the building would be setback five feet (5') from the west property line. The building appears to comply with all minimum required setback regulations.

Elevation plans show a brick building with a pitched asphalt roof. There is a covered main entryway supported by columns with horizontal hardy board gable roof above.

The landscape plan submitted show fifteen (15) White Pine trees planted along the abutting residential properties; two (2) Goldenrain Trees and two (2) American Hornbeam trees at the parking lot entrance; two (2) Star Magnolia Trees and six (6) Goldflame Spirea shrubs at the

front of the building; and a seed bioretention area with short grass prairie seed mix along the east and south sides of the proposed building.

April 29, 2025: Public Hearing:

Approving Resolution: That the request to develop Soave Office Building at 37739 Seven Mile Road, is hereby approved, subject to City Council approval and the following conditions:

1. That the General Site Plan, identified as Sheet 1 of 3, dated March 17, 2025, as revised, prepared by Arpee/Donnan, Inc., is hereby approved and shall be adhered to.

2. That the Elevations Plan, identified as Sheets A-2 and A-3, prepared by John T. Holowicki, is hereby approved and shall be adhered to.

3. That the Landscape Plan, identified as Sheet 2 of 3, prepared by Arpee/Donnan Inc., dated March 17, 2025, is hereby approved and shall be adhered to.

4. Parking spaces shall be doubled striped at ten feet (10') wide by twenty feet (20') in length.

5. That all exterior light fixtures shall not exceed twenty feet (20') in height and shall be aimed and shielded to minimize stray light trespassing across property lines and glaring into adjacent roadway.

6. That this site shall meet either the City of Livonia or the Wayne County Storm Water Management Ordinance, whichever applies, and shall secure any required permits, including soil erosion and sedimentation control permits.

7. All disturbed lawn areas, including road rights-of-way, shall be sodded instead of hydroseeding.

8. Underground sprinklers shall be installed for all landscaped and sodded areas. All planted materials shall be installed to the satisfaction of the Inspection Department and permanently maintained in a healthy condition.

9. That no LED lightband or exposed neon shall be permitted on this site including, but not limited to, the building or around the windows.

10. That the specific plans referenced in this approving resolution shall be submitted to the Inspection Department at the time the building permits are applied for; and

11. Pursuant to Section 13.13 of the Livonia Zoning Ordinance, as amended, this approval is valid for a period of one year only from the date of approval by the City

Council, and unless a building permit is obtained, this approval shall be null and void at the expiration of said period.

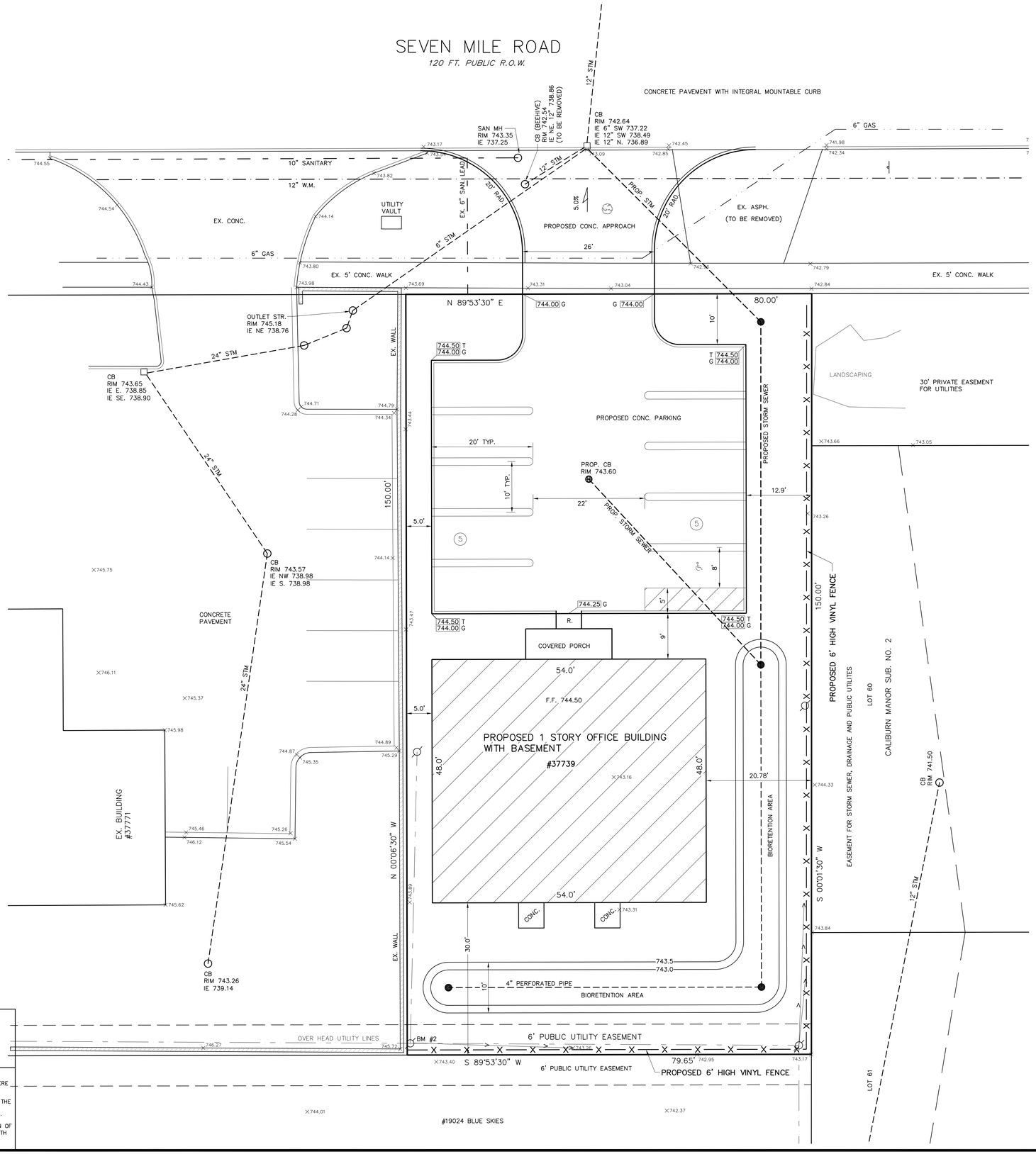

SCALE: 1 IN. = 10 FT.

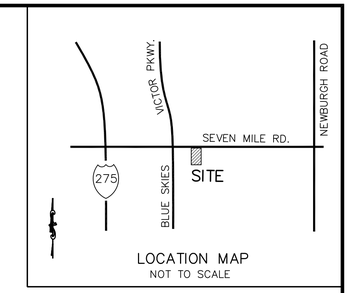

LOCATION MAP
NOT TO SCALE

PROPERTY DESCRIPTION 025-01-0001-000

LOT 1 OF "MELODY MANOR" A SUBDIVISION OF PART OF THE N.E. 1/4 OF SECTION 7, T. 1 S., R. 9 E. CITY OF LIVONIA, WAYNE COUNTY, MICHIGAN AS RECORDED IN LIBER 72, PAGE 43 WAYNE COUNTY RECORDS.
CONTAINING 0.27 ACRES

BENCH MARKS:
BM #1 – BRONZE DISC IN CONC. POST @ N.W. COR. 7 MILE & NEWBURGH.
ELEV. = 734.35 USC&GS

BM#2 – NAIL IN UTILITY POLE @ S.W. CORNER OF PROPERTY
ELEV. = 744.43 USC&GS

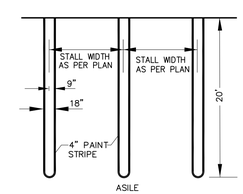

TYPICAL PARKING STALL
NOT TO SCALE

SHEET INDEX

SH 1. SITE PLAN
SH 2. LANDSCAPE PLAN
SH 3. BOUNDARY & TOPOGRAPHIC SURVEY

72 HOURS
(3 WORKING DAYS)
BEFORE YOU DIG
CALL MISS DIG
800-482-7171
(TOLL FREE)

UTILITY WARNING

UNDERGROUND UTILITY LOCATIONS AS SHOWN ON THE PLAN, WERE OBTAINED FROM UTILITY OWNER AND NOT FIELD LOCATED.

A MINIMUM OF 72 HOURS PRIOR TO BEGINNING CONSTRUCTION, THE CONTRACTOR SHALL NOTIFY MISS DIG AND HAVE ALL UNDERGROUND UTILITIES STAKED BEFORE ANY WORK CAN BEGIN.

THE CONTRACTOR SHALL BE RESPONSIBLE FOR THE PROTECTION OF AND/OR RELOCATION OF ALL UTILITIES THAT MAY INTERFERE WITH CONSTRUCTION.

REVISIONS

PREPARED FOR
LEO SOAVE BUILDING INC.
37739 SEVEN MILE
LIVONIAI, MICHIGAN 48152
586-219-7880

ARPEE/DONNAN, INC.
LAND SURVEYING · ENGINEERING · MAPPING
32233 SCHOOLCRAFT RD., SUITE 103
LIVONIA, MICHIGAN 48150
PHONE (734) 953-3335 FAX (734) 953-3324

SITE PLAN
37739 SEVEN MILE
CITY OF LIVONIA
WAYNE COUNTY, MICHIGAN

DATE	03/17/25
DRAFTED BY	WRD
CHECKED BY	WGD
F.B.	287
FILE:	
JOB #	24014

SH. 1 OF 3

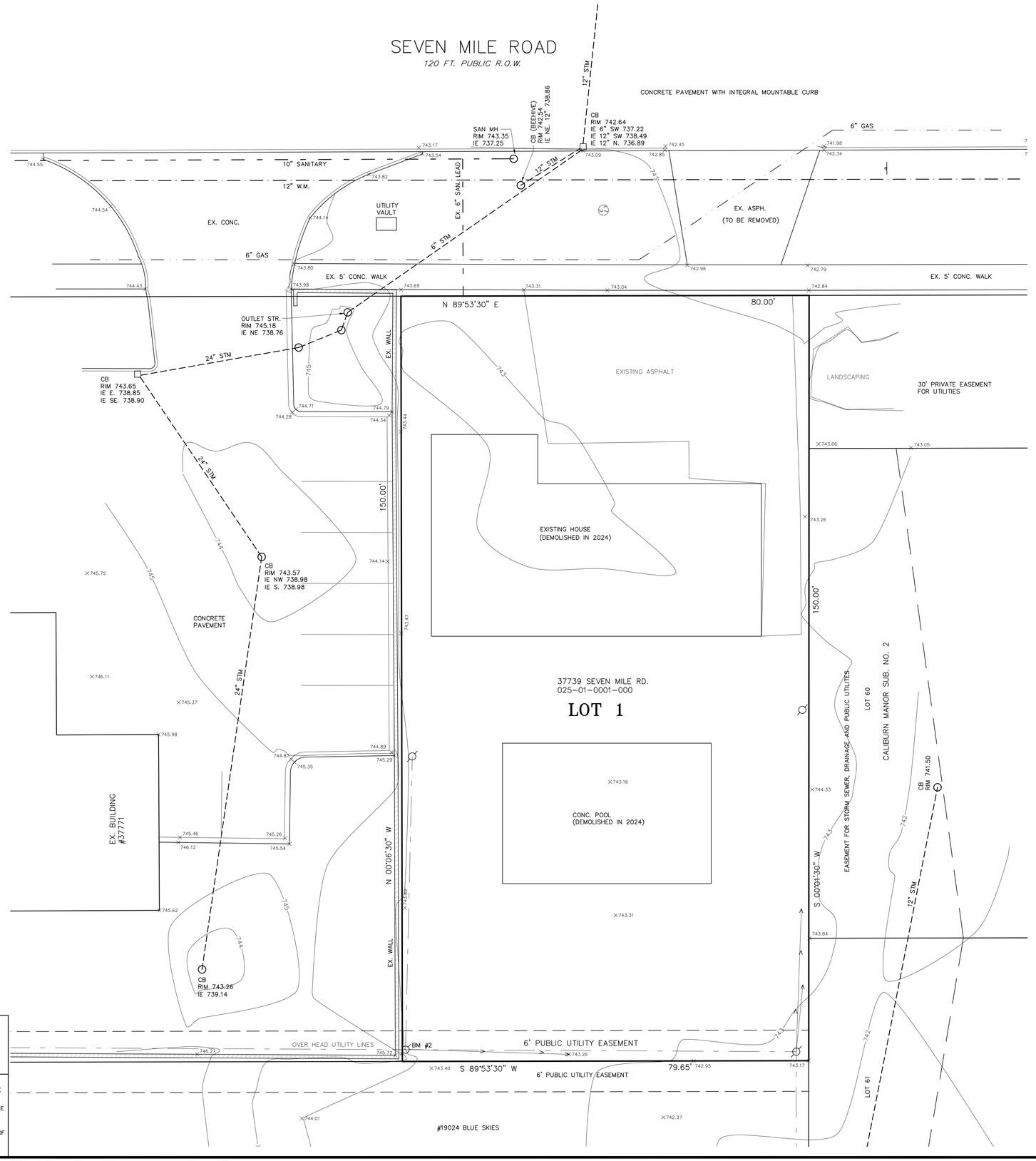

SCALE: 1 IN. = 10 FT.

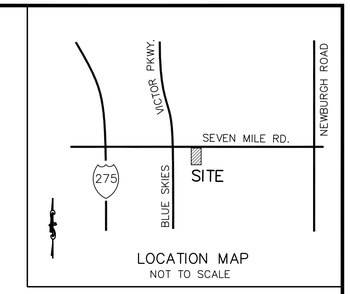

LOCATION MAP
NOT TO SCALE

PROPERTY DESCRIPTION 025-01-0001-000

LOT 1 OF "MELODY MANOR" A SUBDIVISION OF PART OF THE N.E. 1/4 OF SECTION 7, T. 1 S., R. 9 E. CITY OF LIVONIA, WAYNE COUNTY, MICHIGAN AS RECORDED IN LIBER 72, PAGE 43 WAYNE COUNTY RECORDS.
CONTAINING 0.27 ACRES

BENCH MARKS:
BM #1 – BRONZE DISC IN CONC. POST @ N.W. COR. 7 MILE & NEWBURGH.
ELEV. = 734.35 USC&GS

BM#2 – NAIL IN UTILITY POLE @ S.W. CORNER OF PROPERTY
ELEV. = 744.43 USC&GS

LEGEND

(R.) RECORDED AS
FIRE HYDRANT
GATE VALVE & WELL
SEWER MANHOLE
CATCH BASIN
SIGN
PEDESTAL/CABLE BOX
UTILITY POLE
GUY ANCHOR
932.63 SPOT ELEVATION

SANITARY SEWER
STORM SEWER
WATER
OVERHEAD
GAS

CONTOUR INTERVAL = 1 FOOT

72 HOURS
(3 WORKING DAYS)
BEFORE YOU DIG
CALL MISS DIG
800-482-7171
(TOLL FREE)

UTILITY WARNING

UNDERGROUND UTILITY LOCATIONS AS SHOWN ON THE PLAN, WERE OBTAINED FROM UTILITY OWNER AND NOT FIELD LOCATED.

A MINIMUM OF 72 HOURS PRIOR TO BEGINNING CONSTRUCTION, THE CONTRACTOR SHALL NOTIFY MISS DIG AND HAVE ALL UNDERGROUND UTILITIES STAKED BEFORE ANY WORK CAN BEGIN.

THE CONTRACTOR SHALL BE RESPONSIBLE FOR THE PROTECTION OF AND/OR RELOCATION OF ALL UTILITIES THAT MAY INTERFERE WITH CONSTRUCTION.

REVISIONS

PREPARED FOR
LEO SOAVE BUILDING INC.
37739 SEVEN MILE
LIVONIA, MICHIGAN 48152
586-219-7880

ARPEE/DONNAN, INC.
LAND SURVEYING · ENGINEERING · MAPPING
32233 SCHOOLCRAFT RD., SUITE 103
LIVONIA, MICHIGAN 48150
PHONE (734) 953-3335 FAX (734) 953-3324

BOUNDARY AND TOPOGRAPHIC SURVEY

37739 SEVEN MILE
CITY OF LIVONIA
WAYNE COUNTY, MICHIGAN

DATE	03/17/25
DRAFTED BY	WRD
CHECKED BY	WGD
F.B.	287
FILE:	
JOB #	24014

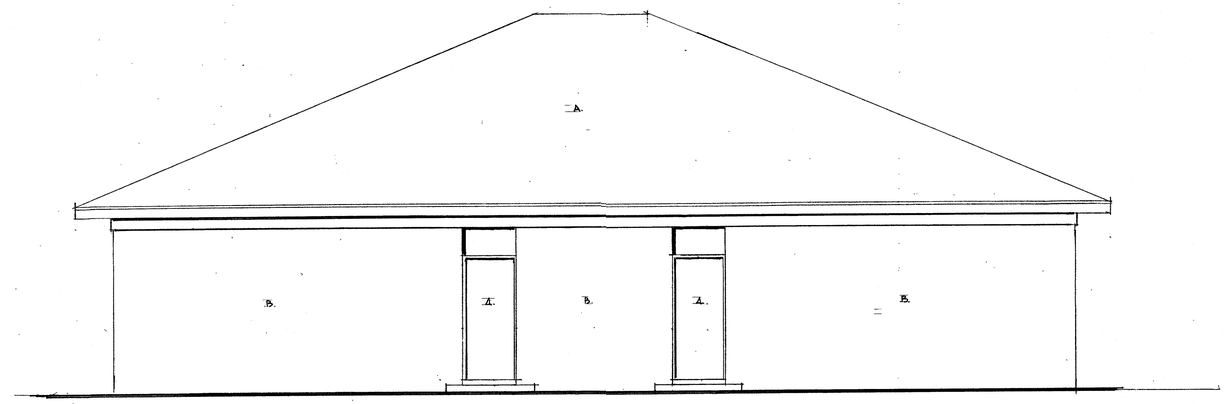

REAR ELEVATION 1/4" = 1'-0"

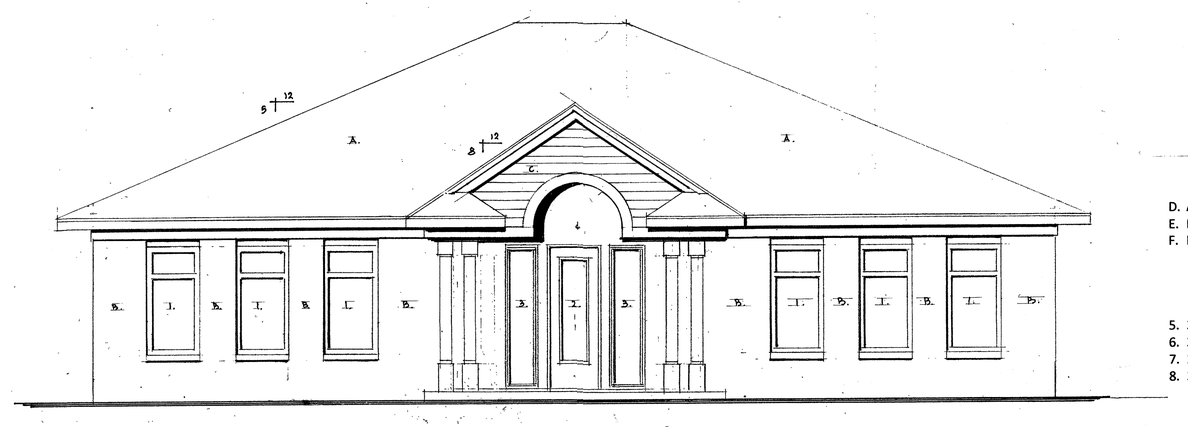

FRONT ELEVATION 1/4" = 1'-0"

Materials

D. Asphalt Shingles
E. Brick
F. Horizontal Hardie Plank Siding

Windows and Doors

5. 36" x 72" Fixed Glass/Aluminum Frame
6. 36" x 96" S.C. Entry Door
7. 24" x 96" Fixed Tempered Sidelite
8. 36" x 84" H.M. Door and Frame

STATE OF MICHIGAN
JOHN T. HOLOWICKI
ARCHITECT
No. 1301034172
LICENSED ARCHITECT

JOB NO. 2028.29

SHEET NO. A.2

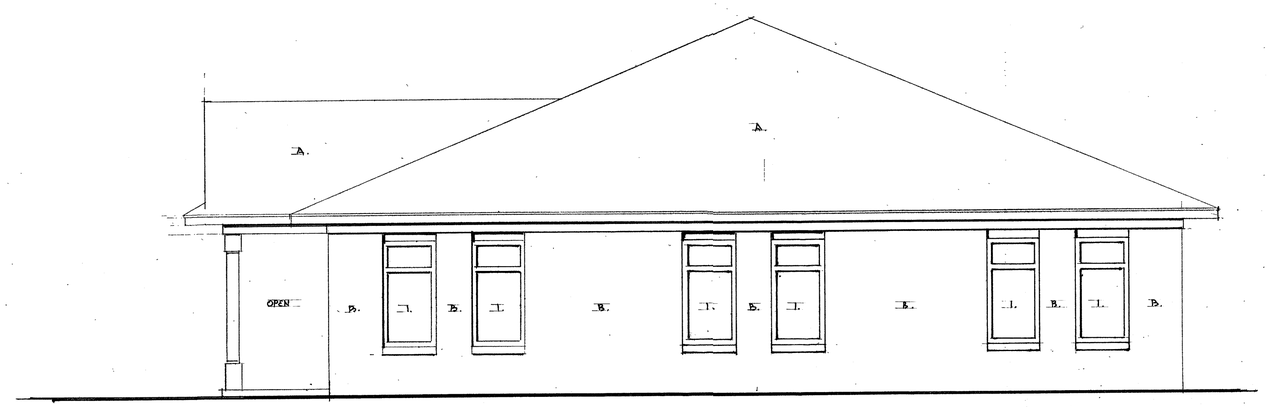

WEST ELEVATION 1/4" = 1'-0"

Materials

A. Asphalt Shingles
B. Brick
C. Horizontal Hardie Plank Siding

Windows and Doors

1. 36" x 72" Fixed Glass/Aluminum Frame
2. 36" x 96" S.C. Entry Door
3. 24" x 96" Fixed Tempered Sidelite
4. 36" x 84" H.M. Door and Frame

STATE OF MICHIGAN
JOHN T. HOLOWICKI
ARCHITECT
No 1301034172
LICENSED ARCHITECT

JOB No.
2025·129

SHEET No.
A·3

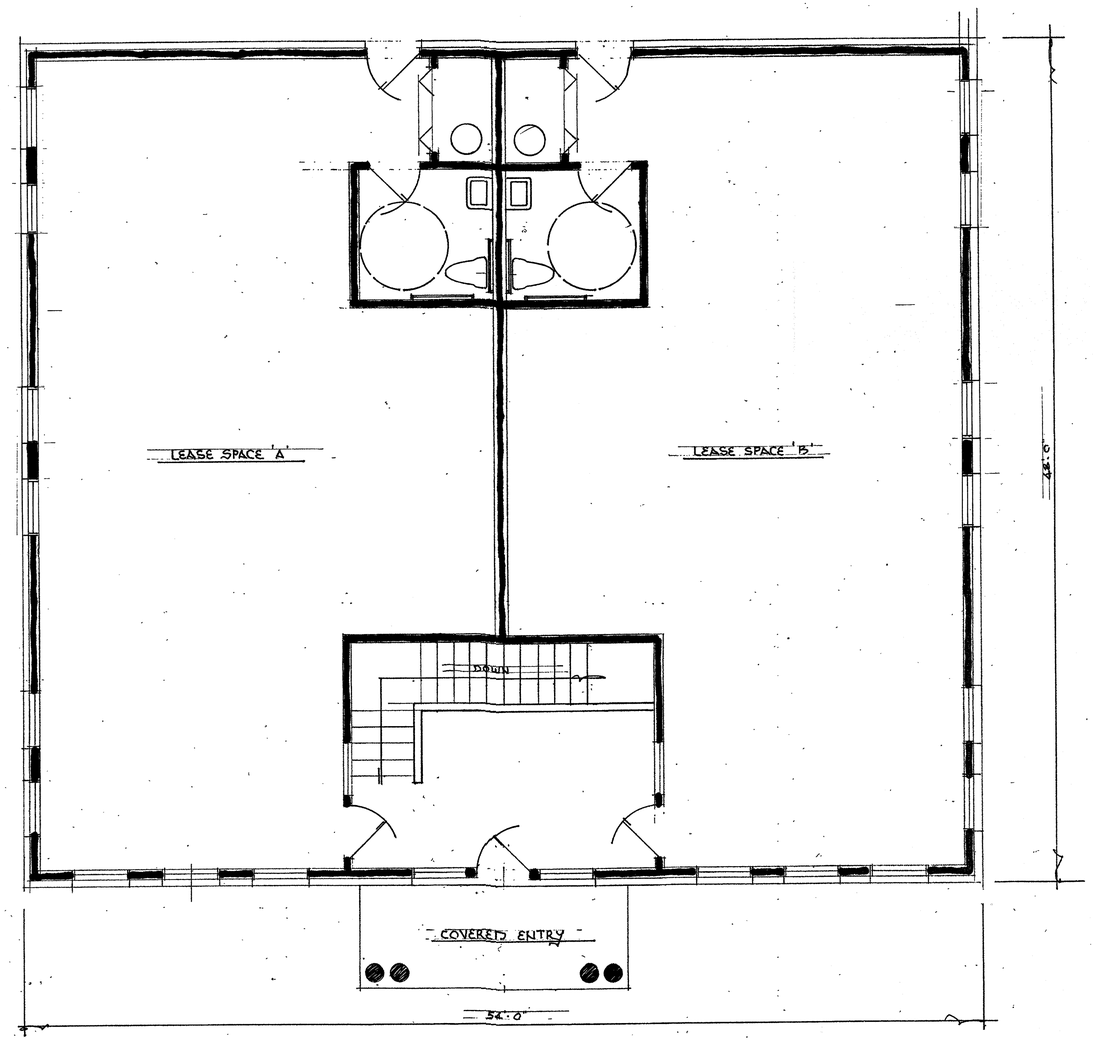

STATE OF MICHIGAN
JOHN T. LAOLOWICKI
ARCHITECT
No
1301034172
LICENSED ARCHITECT

JOB NO.
2025.29

SHEET NO.
A.1

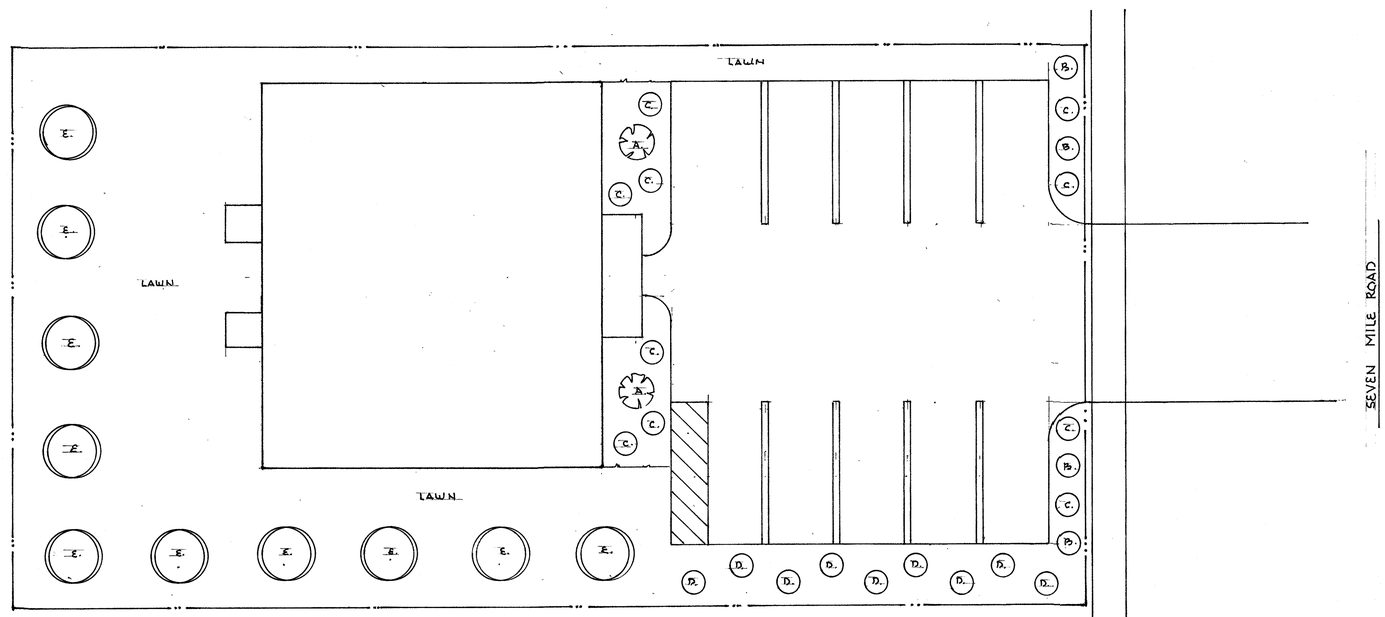

LANDSCAPE PLAN 1" = 10.0'

N

LANDSCAPE NOTES:

A. WEEPING CHERRY TREE 2" CALIPER

B. BOXWOOD 5 GALLON

C. GLOBE ARBORVITAE 3 GALLON

D. EMERALD GREEN ARBORVITAE 5'-6' HT.

ALL PLANTED AREAS TO HAVE RED MULCH WITH SEASONAL FLOWERS.

ALL LANDSCAPED AREAS TO BE IRRIGATED BY TIMED UNDERGROUND SPRINKLER SYSTEM.

E. AUSTRIAN PINE 5-6 FT.

STATE OF MICHIGAN
JOHN T. HOLOWICKI
ARCHITECT
No 1301034172
LICENSED ARCHITECT

JOB NO.
2025-29

SHEET NO.
L-1

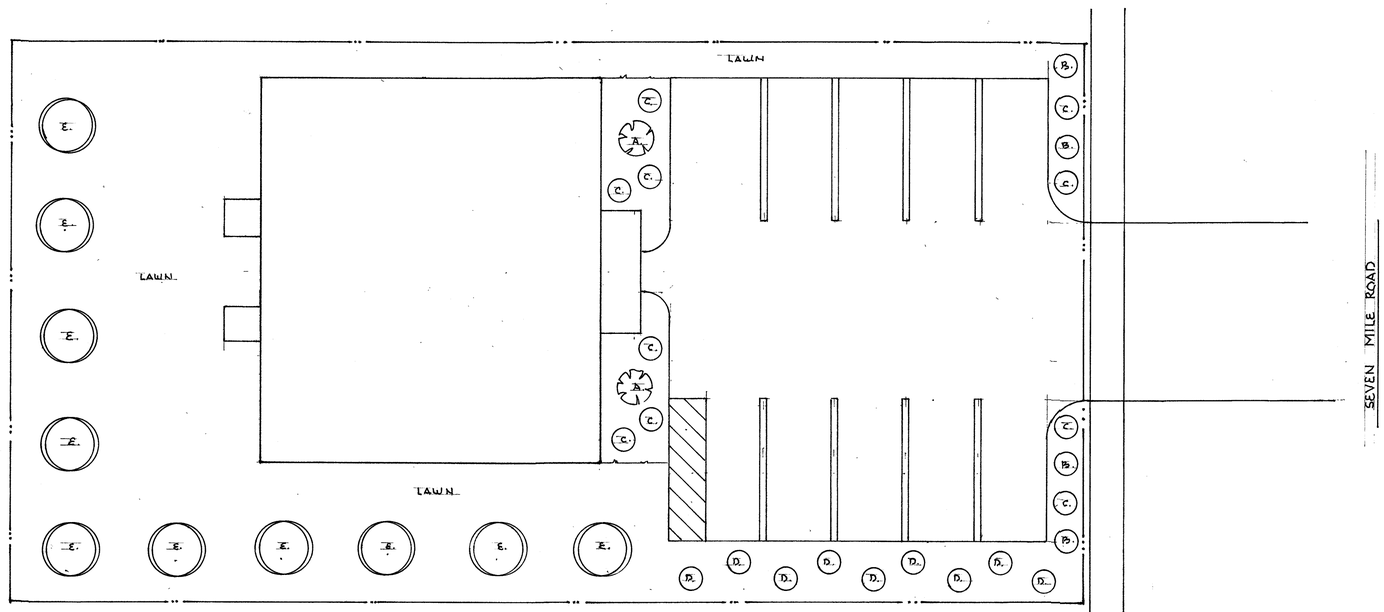

LANDSCAPE PLAN 1" : 10.0'

N

LANDSCAPE NOTES :

A. WEEPING CHERRY TREE 2" CALIPER

B. BOXWOOD 5 GALLON

C. GLOBE ARBORVITAE 3 GALLON

D. EMERALD GREEN ARBORVITAE 5'-6' HT.

ALL PLANTED AREAS TO HAVE RED MULCH WITH SEASONAL FLOWERS.

ALL LANDSCAPED AREAS TO BE IRRIGATED BY TIMED UNDERGROUND SPRINKLER SYSTEM.

E. AUSTRIAN PINE 5 - 6 FT.

STATE OF MICHIGAN
JOHN T. HOLOWICKI
ARCHITECT
No 1301034172
LICENSED ARCHITECT

JOB NO.
2025-29

SHEET NO.
L-1

DEPARTMENT OF PUBLIC WORKS
ENGINEERING DIVISION

TODD J. ZILINCIK, P.E.
CITY ENGINEER

DAVID W. LEAR, P.E.
ASST. CITY ENGINEER

MAUREEN MILLER BROSNAN
MAYOR

DONALD R ROHRAFF
DIRECTOR OF PUBLIC WORKS

12973 FARMINGTON ROAD
LIVONIA, MICHIGAN 48150
(734) 466-2571
FAX: (734) 466-2195

April 3, 2025

Mr. Kristoffer Canty
Planner IV
City of Livonia

Re: Petition 2025-03-08-04 – #37739 Seven Mile Road (Leo Soave Building Inc.)

Dear Mr. Canty:

In accordance with your request, the Engineering Division has reviewed the above referenced petition. We have no objections to the proposed rezoning at this time, but would like to note the following items:

1. The subject parcel is assigned the address of **#37739 Seven Mile Road**. Should additional addresses be needed, the Owner will need to contact this Department once approvals have been obtained.

2. The existing parcel currently has access to public sanitary sewer, storm sewer and water main. The drawings do not provide any calculations for proposed flows from the development, so we cannot comment on impacts to the existing systems at this time. The owner shall submit drawings to this department once site plan approval has been granted for a complete Engineering review and permitting.

   Based on what has been provided, we have the flowing comments regarding the utilities:

   i) Water Main: There is an existing 12" water main on the south side of Seven Mile Road for a service connection to the proposed building.
   ii) Sanitary sewer: There is an existing 6" sanitary lead to the parcel. If the developer is intending to re-use this service, they will be required to clean and televise it prior to any approvals. If the existing lead is not in a useable condition, they will be required to install a new lead and abandon the existing one.
   iii) Storm Sewer: Detention is shown as proposed on the submitted drawings, but no other information is shown. Storm Sewer will need to meet the Wayne County Storm Ordinance requirements and will be subject to Wayne County review.

3. Any disturbances within the Seven Mile Road right-of-way will require permits through the Wayne County Department of Public Service, including driveway approach and sidewalk removals and placements.

Should you have any additional questions on this matter, please feel free to contact myself at (734) 466-2608 or the City Engineer, Mr. Todd Zilincik at (734) 466-2561. If you would prefer, you can e-mail either of us at dlear@livonia.gov or tzilincik@livonia.gov.

Sincerely,

David W. Lear, P.E.
Assistant City Engineer

cc: 2025 Petition File

DEPARTMENT OF PUBLIC SAFETY
LIVONIA FIRE & RESCUE

ROBERT JENNISON
FIRE CHIEF

MAUREEN MILLER BROSNAN
MAYOR

14910 FARMINGTON ROAD
LIVONIA, MICHIGAN 48154-5419
734-466-2444
734-466-2082 fax

DATE: April 25, 2025

TO: Kristoffer Canty, Planner IV

FROM: Livonia Fire Prevention Division

SUBJECT: Petition #2025-03-08-04 Soave Office Building 37729 Seven Mile Rd.

This office has reviewed the site plan submitted in connection with a request to construct a commercial building on property located at the above referenced address.

We have no objections to this proposal.

A further detailed plan review will take place when this division receives an official plan set.

Sincerely,

Brian R. Kukla

Brian R. Kukla
Fire Marshal

DEPARTMENT OF PUBLIC SAFETY
DIVISION OF POLICE

THOMAS GORALSKI
CHIEF OF POLICE

MAUREEN MILLER BROSNAN
MAYOR

15050 Farmington Road
Livonia, Michigan 48154-5499
(734) 466-2470
FAX: (734) 261-2265

March 25th 2025

Mr. Scott Miller
City of Livonia Planning Dept
33000 Civic Center Drive
Livonia, MI 48154

Re: Petitions 2025-03-08-04 – 37739 Seven Mile Road

Mr. Miller,

I have reviewed the plans in connection with the petition. I have no objections to the proposals.

Please feel free to contact me, should you have any questions.

Sincerely,

FOR THE CHIEF OF POLICE,

Paul Walters, Sergeant
Traffic Bureau
(734) 466-2107

INSPECTION DEPARTMENT

BUILDING
HEATING
PLUMBING
ELECTRICAL
ZONING
ENVIRONMENTAL PROTECTION
ORDINANCE ENFORCEMENT

MAUREEN MILLER BROSNAN
MAYOR

JEROME A. HANNA
DIRECTOR

33000 CIVIC CENTER DRIVE
LIVONIA, MICHIGAN 48154-3097
(734) 466-2580
FAX: (734) 466-2095

Date: April 21, 2025

To: Kristoffer Canty

From: Jerome Hanna

RE: Petition 2025-03-08-04 Soave Office Building 37729 Seven Mile Road

Pursuant to your request, the above-referenced Petition has been reviewed.

1. The west wall of the proposed structure is shown to be 5 feet from the property line. This will require the exterior wall to have a minimum of a one-hour fire rating, including any openings in that wall.
2. The single barrier-free parking space is required to be van accessible and shall have a minimum of an eight-foot hashed, accessible area. The proposed parking space only shows a five-foot hashed area.

This Department has no further objections to this Petition.

I trust this provides the requested information.

Jerome Hanna
Jerome Hanna
Director of Inspection

DEPARTMENT OF FINANCE

Debra Peck Lichtenberg, CPA
DIRECTOR OF FINANCE

Connie Kumpula
CHIEF ACCOUNTANT

MAUREEN MILLER BROSNAN
MAYOR

33000 CIVIC CENTER DRIVE
LIVONIA, MICHIGAN 48154-3097
(734) 466-2260
FAX: (734) 421-1807

April 14th, 2025

Kristoffer Canty
Planning Commission
33000 Civic Center Drive
Livonia, MI 48154

Petition 2025-03-08-04 - 37729 Seven Mile

Dear Kristoffer,

I have reviewed the address connected with the above noted petition. As there are no outstanding amounts receivable (general or water and sewer), I have no objections to the proposal.

Please contact me if you have any further questions.

Very truly yours,

Connie Kumpula
Chief Accountant

CK: sc

Outlook

RE: 2025-03-08-04_Fin Treas Assess.pdf

From Nash, Susan M. <snash@livonia.gov>
Date Mon 4/28/2025 1:07 PM
To Reece, Stephanie <SReece@livonia.gov>; Kumpula, Connie <ckumpula@livonia.gov>
Cc Wagner, Jennifer <jwagner@livonia.gov>; Goff, Erika <egoff@livonia.gov>

Taxes are current

Susan Nash
City Treasurer
City of Livonia | Treasurer's Office
(734) 466-2244
snash@livonia.gov

From: Reece, Stephanie <SReece@livonia.gov>
Sent: Monday, April 28, 2025 11:12 AM
To: Kumpula, Connie <ckumpula@livonia.gov>; Nash, Susan M. <snash@livonia.gov>
Cc: Wagner, Jennifer <jwagner@livonia.gov>; Goff, Erika <egoff@livonia.gov>
Subject: 2025-03-08-04_Fin Treas Assess.pdf

Good morning,

I do not show us receiving a response on the attached. The Planning commission meeting is tomorrow. If you can get that to us by then, it would be appreciated.
Thank you

Stephanie Reece
Program Supervisor
City of Livonia | Planning Department
(734) 466-2288
SReece@livonia.gov

LETTER TO THE LIVONIA CITY COUNCIL

28.

Clerk
May 15, 2025

MEETING DATE	PRESENTED BY
R060225	

AGENDA ITEM

REQUEST TO BARRICADE CITY STREET: Clint McDermott, re: in front of the home located at 10029 Bassett Street on Saturday, June 14, 2025, from 2:00 p.m. to 10:00 p.m., in order to host a graduation party.

BACKGROUND DETAILS

This block party is a graduation celebration. Mr. McDermott is requesting to barricade a portion of Bassett Street between 10100 and 10029 to allow a crosswalk for small children to use. They are expecting 150 -200 people.

PREFERRED COUNCIL RECOMMENDATION/RESOLUTION (Please complete this field. Attachments are not to be used in lieu of the recommendation)

Approve as submitted.

ATTACHMENTS

1. R060225, Block Party, Clint McDermott, 10029 Bassett

APPROVED BY

_____ Date: May 15, 2025
Doris DeMarco, Deputy Clerk

REQUEST FOR NOISE WAIVER BLOCK PARTY and/or BARRICADING OF CITY STREETS

Send to: Livonia City Council, c/o City Clerk, 33000 Civic Center Drive, Livonia, MI 48154-3097
or hand deliver to the City Clerk's Office **at least 8 weeks prior to the planned event**

PLEASE PRINT

Date of Application: 5/12/25 Date to appear at a Council Meeting: _____

Name of Neighborhood Representative: CLINT MCDERMOTT

Address (please include zip code): 10029 BASSETT ST, 48150

Telephone Number with area code: Home: 734-751-4549 Office: _____

Email: CORNHOLIO13@HOTMAIL.COM

Please circle what is being requested – **"BLOCK PARTY"** and/or **"STREET BARRICADING"**

SAT JUNE 14th	NONE	2P – 10P
Date of Block Party and/or Barricading	Rain Date	Start/end time of Block Party and/or Barricading **End time is no later than 10:00 p.m.**

Location of Block Party and/or Barricading: (Be specific. Indicate which streets and between which boundaries).

10029 BASSETT ST. OVER FOR MAP DIAGRAM →
ONLY

Type of Event: Briefly (Describe activities planned. Music, barbecue, games, etc.) BLOCK PARTY / GRADUATION PARTY, MANY SMALL CHILDREN WILL BE CROSSING THE STREET TO THE VICINITY OF OUR HOUSE

How many barricades are you requesting (max. 10)? 2

Approximate Number Attending: 150–200

Date of Council Approval/Denial: _____

Council Resolution Number: _____

RECEIVED 2025 MAY 13 AM 11:15 CITY CLERK

City Council Office Document
Revised August 2021
A:Block Party Form

REQUESTED STREET
BARRICADING FOR
8 HOURS 2p – 10p
ON SATURDAY JUNE 14TH.
ALL NEIGHBORS CAN STILL
DEPART THE SUBDIVISION
BARRICADES

ANN ARBOR TRAIL

ORANGELAWN

BASSETT ST

CHILD
SAFE
CROSSING

10029
MY HOUSE

LETTER TO THE LIVONIA CITY COUNCIL

29.

Law
May 22, 2025

MEETING DATE	PRESENTED BY
R060225	Carter Fisher, City Attorney

AGENDA ITEM

REQUEST TO APPROVE CABLE FRANCHISE AGREEMENT BETWEEN THE CITY OF LIVONIA AND SPECTRUM MID-AMERICA, LLC, Department of Law, re: for a period of (10) ten years from the date issued.

BACKGROUND DETAILS

Dear Council Members,

As you may know, the Uniform Video Services Local Franchise Act, Public Act 480 of 2006, MCL 484.3301, *et seq*, created a standard cable television franchise agreement for municipalities throughout the state. The act gives municipalities little or nothing in the way of options; if a proffered franchise agreement is complete – and the form is largely boilerplate, so completion is not difficult – the community must accept it within 30 days or it takes effect without any municipal approval. Spectrum Mid-America, LLC, a Delaware Limited Liability Corporation, has tendered just such an agreement. It is attached for your review.

The proffered agreement matches the longstanding financial arrangement the City had with Bright House Network: a 5% franchise fee, together with the 1% PEG fee which supports City Channel 8. Though the statute, with its 30-day "shot clock," is biased against review by municipal legislators, the Administration is presenting this agreement for your review and approval. Because the proposed terms appear eminently reasonable and in that there is no realistic and viable alternative, it is recommended that this agreement be approved.

PREFERRED COUNCIL RECOMMENDATION/RESOLUTION (Please complete this field. Attachments are not to be used in lieu of the recommendation)

Approve the Cable Franchise Agreement between the City of Livonia and Spectrum Mid-America, LLC in the manner and form submitted.

SPECIFIC NAME OF PRODUCT AND NUMBER TO BE PURCHASED (if more than one)

N/A

CONTRACT: Amount and/or purchase price and length of contract (with dates if applicable)

N/A

DETAILED WORK BEING PERFORMED

N/A

FISCAL CONSIDERATIONS (Amount requested and Account(s) used. If applicable, Grant Funding information)

N/A

ACCEPTANCE OF BID (Please detail the following: Why accepted, why not lowest bidder, company name, contact person, full address)

N/A

REASON TO WAIVE BID PROCESS (Emergency, Professional services, No advantage to City and why, Consortium package, etc): N/A

ATTACHMENTS

1. Charter-Spectrum Franchise Agreement 2025
2. Letter from Charter Communications May 16, 2025

APPROVED BY

Date: May 22, 2025

Carter Fisher, City Attorney

Date: May 22, 2025

Mike Fisher, Chief Assistant City Attorney

Date: May 22, 2025

Kristin Houchins, Director of Community Resources

Date: May 22, 2025

Maureen Miller Brosnan, Mayor

Charter®
COMMUNICATIONS

Derrick Mathis
Manager
State Government Affairs - Michigan

May 16, 2025

RECEIVED
MAY 21 2025
DEPARTMENT OF LAW
CITY OF LIVONIA

City of Livonia
33000 Civic Center Drive
Livonia, MI 48154

Dear Mayor Miller Brosnan,

As you may know, the Michigan legislature passed Public Act 480, known as the Uniform Video Services Franchise Act ("the Act"), which became effective January 1, 2007. The Michigan Public Service Commission provided the Uniform Video Service Local Franchise Agreement ("Agreement") for use by cable operators and municipalities shortly thereafter. Charter Communications, LLC, dba "Spectrum" is hereby filing for a video franchise under the terms and conditions of the uniform Agreement established by the state of Michigan. Therefore, I'd like to direct your attention to the enclosed Agreement.

a) Franchise Fee: As you review the Agreement, please note the franchise fee section. On page four of the Agreement, the directions stipulate that the municipality must indicate the franchise fee percentage they wish Charter to collect from customers for the term of the Agreement (from 0 to 5%). **The current franchise fee in your community is 5%.** Therefore, if you choose to elect a franchise fee to be collected from customers and paid to your community, as allowed by the Act, please write the franchise fee percentage (%) in the blank on page four, paragraph VI.

b) PEG Fees: Your community currently imposes a fee for support of Public, Educational, and Government ("PEG") channel(s). If the community elects a PEG fee, it will be reflected on page six of the Agreement; note that PEG fees must be agreed to by both parties and substantiated.

I have enclosed **two originals** of the **Agreement,** and an authorized Charter representative has signed both. Please **complete and sign both documents** and **return one fully executed (signed & dated) original to me** (and the completed W-9, if applicable), using the enclosed self-addressed envelope. Be sure to keep one signed/dated original for your records.

We are proud to offer our services in your community and are committed to providing the highest level of customer service to our customers. Should you have questions on the materials provided, or the processes and steps described above, please feel free to call me at (616) 607-2380.

Sincerely,

D Mathis

Derrick Mathis
Manager, State Government Affairs - Michigan
Charter Communications
Enclosures

RECEIVED
MAY 19 PM 3:21
CITY CLERK'S OFFICE

City of Livonia

INSTRUCTIONS FOR
UNIFORM VIDEO SERVICE LOCAL FRANCHISE AGREEMENT

Pursuant to 2006 Public Act 480, MCL 484.3301 *et seq*, any Video Service Provider seeking to provide video service in one or more service areas in the state of Michigan after January 30, 2007, shall file an application for a Uniform Video Service Local Franchise Agreement with the Local Unit of Government ("Franchising Entity") that the Provider wishes to service. Pursuant to Section 2(2) of 2006 PA 480, "Except as otherwise provided by this Act, a person shall not provide video services in any local unit of government without first obtaining a uniform video service local franchise as provided under Section 3." Procedures applicable to incumbent video service providers are set forth below.

As of the effective date (January 1, 2007) of the Act, no existing franchise agreement with a Franchising Entity shall be renewed or extended upon the expiration date of the agreement. The incumbent video Provider, at its option, may continue to provide video services to the Franchising Entity by electing to do one of the following:

1. Terminate the existing franchise agreement before the expiration date of the agreement and enter into a new franchise under a uniform video service local franchise agreement.

2. Continue under the existing franchise agreement amended to include only those provisions required under a uniform video service local franchise.

3. Continue to operate under the terms of an expired franchise until a uniform video service local franchise agreement takes effect. An incumbent video Provider with an expired franchise on the effective date has 120 days after the effective date of the Act to file for a uniform video service local franchise agreement.

On the effective date (January 1, 2007) of the Act, any provisions of an existing Franchise that are inconsistent with or in addition to the provisions of a uniform video service local Franchise Agreement are unreasonable and unenforceable by the Franchising Entity.

If, at a subsequent date, the Provider would like to provide video service to an additional Local Unit of Government, the Provider must file an additional application with that Local Unit of Government.

The forms shall meet the following requirements:

- The Provider must complete both the "Uniform Video Service Local Franchise Agreement" and "Attachment 1 - Uniform Video Service Local Franchise Agreement" forms if they are seeking a new/renewed Franchise Agreement, and send the forms by mail (certified, registered, first-class, return receipt requested, or by a nationally recognized overnight delivery service) to the appropriate Franchising Entity. Until otherwise officially notified by the Franchising Entity, the forms shall be sent to the Clerk or any official with the responsibilities or functions of the Clerk in the Franchising Entity. **"Attachment 2 - Uniform Video Service Local Franchise Agreement" is not required to be filed at this time *unless* it is being used regarding amendments, terminations, or transfers pertaining to an existing Uniform Video Service Local Franchise Agreement. (Refer to Sections X to XII of the Agreement, as well as Section 3(4-6) of the Act.)**

- Pursuant to Section 11 of the Act: Except under the terms of a mandatory protective order, trade secrets and commercial or financial information designated as such and submitted under the Act to the Franchising Entity or Commission are exempt from the Freedom of Information Act, 1976 PA 442, MCL 15.231 to 15.246 and MUST BE KEPT CONFIDENTIAL.

    1. The Provider may specify which items of information should be deemed "confidential." It is the responsibility of the provider to clearly identify and segregate any confidential information submitted to the franchising entity with the following information:

        "[insert PROVIDER'S NAME]
        [CONFIDENTIAL INFORMATION]"

2. The Franchising Entity receiving the information so designated as confidential is required (a) to protect such information from public disclosure, (b) exempt such information from any response to a FOIA request, and (c) make the information available only to and for use only by such local officials as are necessary to approve the franchise agreement or perform any other task for which the information is submitted.

3. Any Franchising Entity which disputes whether certain information submitted to it by a provider is entitled to confidential treatment under the Act may apply to the Commission for resolution of such a dispute. Unless and until the Commission determines that part or all of the information is not entitled to confidential treatment under the Act, the Franchising Entity shall keep the information confidential.

- Responses to all questions must be provided and must be amended appropriately when changes occur.
- All responses must be printed out, typed, signed/dated (where appropriate), and mailed (certified, registered, first class, return receipt requested, or by a national recognized overnight delivery service) to the appropriate party.
- The Agreement and Attachments are templates. Tab through the documents and fill in as appropriate, use the appropriate "dropdown box" (City/Village/Township) when indicated.
- For sections that need explanation, if the Provider runs out of space, the Provider should then submit the application with typed attachments that are clearly identified.
- The Franchising Entity shall notify the Provider as to whether the submitted Franchise Agreement is complete as required by this Act within 15 business days after the date that the Franchise Agreement is filed. If the Franchise Agreement is not complete, the Franchising Entity shall state in its notice the reasons the franchise agreement is incomplete. The Franchising Entity cannot declare an application to be incomplete because it may dispute whether or not the applicant has properly classified certain material as "confidential."
- A Franchising Entity shall have 30 days after the submission date of a complete Franchise Agreement to approve the agreement. If the Franchising Entity does not notify the Provider regarding the completeness of the Franchise Agreement or approve the Franchise Agreement within the time periods required under this subsection, the franchise agreement shall be considered complete and the Franchise Agreement approved. The Provider shall notify both the Franchising Entity and the Michigan Public Service Commission of such an approved and completed Agreement by completing **Attachment 3 - Uniform Video Service Local Franchise Agreement**.
- For changes to an existing Uniform Video Service Local Franchise Agreement (amendments, transfers, or terminations), the Provider must complete the "**Attachment 2 - Uniform Video Service Local Franchising Entity**" form, and send the form to the appropriate Franchising Entity.
- For information that is to be submitted to the Michigan Public Service Commission, please use the following address:

Michigan Public Service Commission
Attn: Video Franchising
P.O. Box 30221
Lansing, MI 48909

Fax: (517) 284-8200

Questions should be directed to the Telecommunications Division, Michigan Public Service Commission at (517) 284-8190.

UNIFORM VIDEO SERVICE LOCAL FRANCHISE AGREEMENT

THIS UNIFORM VIDEO SERVICE LOCAL FRANCHISE AGREEMENT ("Agreement") is made, pursuant to 2006 PA 480, MCL 484.3301 *et seq*, (the "Act") by and between the City of Livonia, a Michigan municipal corporation (the "Franchising Entity"), and Spectrum Mid-America, LLC, a Delaware Limited Liability corporation doing business as n/a.

I. Definitions

For purposes of this Agreement, the following terms shall have the following meanings as defined in the Act:

A. "Cable Operator" means that terms as defined in 47 USC 522(5).
B. "Cable Service" means that terms as defined in 47 USC 522(6).
C. "Cable System" means that term as defined in 47 USC 522(7).
D. "Commission" means the Michigan Public Service Commission.
E. "Franchising Entity" means the local unit of government in which a provider offers video services through a franchise.
F. "FCC" means the Federal Communications Commission.
G. "Gross Revenue" means that term as described in Section 6(4) of the Act and in Section VI(D) of the Agreement.
H. "Household" means a house, an apartment, a mobile home, or any other structure or part of a structure intended for residential occupancy as separate living quarters.
I. "Incumbent video provider" means a cable operator serving cable subscribers or a telecommunication provider providing video services through the provider's existing telephone exchange boundaries in a particular franchise area within a local unit of government on the effective date of this act.
J. "IPTV" means internet protocol television.
K. "Local unit of government" means a city, village, or township.
L. "Low-income household" means a household with an average annual household income of less than $35,000.00 as determined by the most recent decennial census.
M. "METRO Act" means the Metropolitan Extension Telecommunications Rights-of-Way Oversight Act, 2002 PA 48, MCL 484.3101 *et seq*.
N. "Open video system" or "OVS" means that term as defined in 47 USC 573.
O. "Person" means an individual, corporation, association, partnership, governmental entity, or any other legal entity.
P. "Public rights-of-way" means the area on, below, or above a public roadway, highway, street, public sidewalk, alley, waterway, or utility easements dedicated for compatible uses.
Q. "Term" means the period of time provided for in Section V of this Agreement.
R. "Uniform video service local franchise agreement" or "franchise agreement" means the franchise agreement required under the Act to be the operating agreement between each franchising entity and video provider in this state.
S. "Video programming" means that term as defined in 47 USC 522(20).
T. "Video service" means video programming, cable services, IPTV, or OVS provided through facilities located at least in part in the public rights-of-way without regard to delivery technology, including internet protocol technology. This definition does not include any video programming provided by a commercial mobile service provider defined in 47 USC 332(d) or provided solely as part of, and via, a service that enables users to access content, information, electronic mail, or other services offered over the public internet.
U. "Video service provider" or "Provider" means a person authorized under the Act to provide video service.
V. "Video service provider fee" means the amount paid by a video service provider or incumbent video provider under Section 6 of the Act and Section VI of this Agreement.

II. Requirements of the Provider

A. An unfranchised Provider will not provide video services in any local unit of government without first obtaining a uniform video service local franchise agreement as provided under **Section 3 of the Act** (except as otherwise provided by the Act).
B. The Provider shall file in a timely manner with the Federal Communications Commission all forms required by that agency in advance of offering video service in Michigan.
C. The Provider agrees to comply with all valid and enforceable federal and state statutes and regulations.
D. The Provider agrees to comply with all valid and enforceable local regulations regarding the use and occupation of public rights-of-way in the delivery of the video service, including the police powers of the Franchising Entity.
E. The Provider shall comply with all Federal Communications Commission requirements involving the distribution and notification of federal, state, and local emergency messages over the emergency alert system applicable to cable operators.
F. The Provider shall comply with the public, education, and government programming requirements of Section 4 of the Act.
G. The Provider shall comply with all customer service rules of the Federal Communications Commission under 47 CFR 76.309 (c) applicable to cable operators and applicable provisions of the Michigan Consumer Protection Act, 1976 PA 331, MCL 445.901 to 445.922.
   i. Including but not limited to: MCL 445.902; MCL 445.903 (1)(a) through 445.903(1)(cc); MCL 445.903(1)(ff) through (jj); MCL 445.903(2); MCL 445.905; MCL 445.906; MCL 445.907; MCL 445.908; MCL 445.910; MCL 445.911; MCL 445.914; MCL 445.915; MCL 445.916; MCL 445.918.
H. The Provider agrees to comply with in-home wiring and consumer premises wiring rules of the Federal Communications Commission applicable to cable operators.
I. The Provider shall comply with the Consumer Privacy Requirements of 47 USC 551 applicable to cable operators.
J. If the Provider is an incumbent video provider, it shall comply with the terms which provide insurance for right-of-way related activities that are contained in its last cable franchise or consent agreement from the Franchising Entity entered before the effective date of the Act.
K. The Provider agrees that before offering video services within the boundaries of a local unit of government, the video Provider shall enter into a Franchise Agreement with the local unit of government as required by the Act.
L. The Provider understands that as the effective date of the Act, no existing Franchise Agreement with a Franchising Entity shall be renewed or extended upon the expiration date of the Agreement.
M. The Provider provides an exact description of the video service area footprint to be served, pursuant to **Section 2(3)(e) of the Act**. If the Provider is not an incumbent video Provider, the date on which the Provider expects to provide video services in the area identified under **Section 2(3)(e) of the Act** must be noted. The Provider will provide this information in Attachment 1 - Uniform Video Service Local Franchise Agreement.
N. The Provider is required to pay the Provider fees pursuant to **Section 6 of the Act**.

III. Provider Providing Access

A. The Provider shall not deny access to service to any group of potential residential subscribers because of the race or income of the residents in the local area in which the group resides.
B. It is a defense to an alleged violation of Paragraph A if the Provider has met either of the following conditions:
   i. Within 3 years of the date it began providing video service under the Act and the Agreement; at least 25% of households with access to the Provider's video service are low-income households.
   ii. Within 5 years of the date it began providing video service under the Act and Agreement and from that point forward, at least 30% of the households with access to the Provider's video service are low-income households.
C. [**If the Provider is using telecommunication facilities**] to provide video services and has more than 1,000,000 telecommunication access lines in Michigan, the Provider shall provide access to its video service to a number of households equal to at least 25% of the households in the provider's telecommunication

service area in Michigan within 3 years of the date it began providing video service under the Act and Agreement and to a number not less than 50% of these households within 6 years. **The video service Provider is not required to meet the 50% requirement in this paragraph until 2 years after at least 30% of the households with access to the Provider's video service subscribe to the service for 6 consecutive months.**

D. The Provider may apply to the Franchising Entity, and in the case of paragraph C, the Commission, for a waiver of or for an extension of time to meet the requirements of this section if 1 or more of the following apply:

i. The inability to obtain access to public and private rights-of-way under reasonable terms and conditions.

ii. Developments or buildings not being subject to competition because of existing exclusive service arrangements.

iii. Developments or buildings being inaccessible using reasonable technical solutions under commercial reasonable terms and conditions.

iv. Natural disasters

v. Factors beyond the control of the Provider

E. The Franchising Entity or Commission may grant the waiver or extension only if the Provider has made substantial and continuous effort to meet the requirements of this section. If an extension is granted, the Franchising Entity or Commission shall establish a new compliance deadline. If a waiver is granted, the Franchising Entity or Commission shall specify the requirement or requirements waived.

F. The Provider shall file an annual report with the Franchising Entity and the Commission regarding the progress that has been made toward compliance with paragraphs B and C.

G. Except for satellite service, the provider may satisfy the requirements of this paragraph and Section 9 of the Act through the use of alternative technology that offers service, functionality, and content, which is demonstrably similar to that provided through the provider's video service system and may include a technology that does not require the use of any public right-of-way. The technology utilized to comply with the requirements of this section shall include local public, education, and government channels and messages over the emergency alert system as required under Paragraph II(E) of this Agreement.

IV. Responsibility of the Franchising Entity

A. The Franchising Entity hereby grants authority to the Provider to provide Video Service in the Video Service area footprint, as described in this Agreement and Attachments, as well as the Act.

B. The Franchising Entity hereby grants authority to the Provider to use and occupy the Public Rights-of-way in the delivery of Video Service, subject to the laws of the state of Michigan and the police powers of the Franchising Entity.

C. The Franchising Entity shall notify the Provider as to whether the submitted Franchise Agreement is complete as required by the Act within 15 business days after the date that the Franchise Agreement is filed. If the Franchise Agreement is not complete, the Franchising Entity shall state in its notice the reasons the Franchise Agreement is incomplete. The Franchising Entity cannot declare an application to be incomplete because it may dispute whether or not the applicant has properly classified certain material as "confidential."

D. The Franchising Entity shall have 30 days after the submission date of a complete Franchise Agreement to approve the agreement. If the Franchising Entity does not notify the Provider regarding the completeness of the Franchise Agreement or approve the Franchise Agreement within the time periods required under **Section 3(3) of the Act**, the Franchise Agreement shall be considered complete and the Franchise Agreement approved.

i. If time has expired for the Franchising Entity to notify the Provider, The Provider shall send (via mail: certified or registered, or by fax) notice to the Franchising Entity and the Commission, using Attachment 3 of this Agreement.

E. The Franchising Entity shall allow a Provider to install, construct, and maintain a video service or communications network within a public right-of-way and shall provide the provider with open, comparable, nondiscriminatory, and competitively neutral access to the public right-of-way.

F. The Franchising Entity may not discriminate against a video service provider to provide video service for any of the following:

i. The authorization or placement of a video service or communications network in public right-of-way.

ii. Access to a building owned by a governmental entity.

iii. A municipal utility pole attachment.

G. The Franchising Entity may impose on a Provider a permit fee only to the extent it imposes such a fee on incumbent video providers, and any fee shall not exceed the actual, direct costs incurred by the Franchising Entity for issuing the relevant permit. A fee under this section shall not be levied if the Provider already has

paid a permit fee of any kind in connection with the same activity that would otherwise be covered by the permit fee under this section or is otherwise authorized by law or contract to place the facilities used by the Provider in the public right-of-way or for general revenue purposes.

H. The Franchising Entity shall not require the provider to obtain any other franchise, assess any other fee or charge, or impose any other franchise requirement than is allowed under the Act and this Agreement. For purposes of this Agreement, a franchise requirement includes but is not limited to, a provision regulating rates charged by video service providers, requiring the video service providers to satisfy any build-out requirements, or a requirement for the deployment of any facilities or equipment.

I. Notwithstanding any other provision of the Act, the Provider shall not be required to comply with, and the Franchising Entity may not impose or enforce, any mandatory build-out or deployment provisions, schedules, or requirements except as required by **Section 9 of the Act**.

J. The Franchising Entity is subject to the penalties provided for under Section 14 of the Act.

V. Term

A. This Franchise Agreement shall be for a period of 10 years from the date it is issued. The date it is issued shall be calculated either by **(a)** the date the Franchising Entity approved the Agreement, provided it did so within 30 days after the submission of a complete franchise agreement, or **(b)** the date the Agreement is deemed approved pursuant to **Section 3(3) of the Act**, if the Franchising Entity either fails to notify the Provider regarding the completeness of the Agreement or approve the Agreement within the time periods required under that subsection.

B. Before the expiration of the initial Franchise Agreement or any subsequent renewals, the Provider may apply for an additional 10-year renewal under **Section 3(7) of the Act.**

VI. Fees

A. A video service Provider shall calculate and pay an annual video service provider fee to the Franchising Entity. The fee shall be 1 of the following:

i. If there is an existing Franchise Agreement, an amount equal to the percentage of gross revenue paid to the Franchising Entity by the incumbent video Provider with the largest number of subscribers in the Franchising Entity.

ii. At the expiration of an existing Franchise Agreement or if there is no existing Franchise Agreement, an amount equal to the percentage of gross revenue as established by the Franchising Entity of _____% (percentage amount to be inserted by Franchising Entity which shall not exceed 5%) and shall be applicable to all providers

B. The fee shall be due on a quarterly basis and paid within 45 days after the close of the quarter. Each payment shall include a statement explaining the basis for the calculation of the fee.

C. The Franchising Entity shall not demand any additional fees or charges from a provider and shall not demand the use of any other calculation method other than allowed under the Act.

D. For purposes of this Section, "gross revenues" means all consideration of any kind or nature, including, without limitation, cash, credits, property, and in-kind contributions received by the provider from subscribers for the provision of video service by the video service provider within the jurisdiction of the franchising entity.

1. **Gross revenues shall include all of the following:**

i. All charges and fees paid by subscribers for the provision of video service, including equipment rental, late fees, insufficient funds fees, fees attributable to video service when sold individually or as part of a package or bundle, or functionally integrated, with services other than video service.

ii. Any franchise fee imposed on the Provider that is passed on to subscribers.

iii. Compensation received by the Provider for promotion or exhibition of any products or services over the video service.

iv. Revenue received by the Provider as compensation for carriage of video programming on that Provider's video service.

v. All revenue derived from compensation arrangements for advertising to the local franchise area.

vi. Any advertising commissions paid to an affiliated third party for video service advertising.

2. **Gross revenues do not include any of the following:**

i. Any revenue not actually received, even if billed, such as bad debt net of any recoveries of bad debt.

ii. Refunds, rebates, credits, or discounts to subscribers or a municipality to the extent not already offset by subdivision (D)(i) and to the extent the refund, rebate, credit, or discount is attributable to the video service.

iii. Any revenues received by the Provider or its affiliates from the provision of services or capabilities other than video service, including telecommunications services, information services, and services, capabilities, and applications that may be sold as part of a package or bundle, or functionality integrated, with video service.

iv. Any revenues received by the Provider or its affiliates for the provision of directory or internet advertising, including yellow pages, white pages, banner advertisement, and electronic publishing.

v. Any amounts attributable to the provision of video service to customers at no charge, including the provision of such service to public institutions without charge.

vi. Any tax, fee, or assessment of general applicability imposed on the customer or the transaction by a federal, state, or local government or any other governmental entity, collected by the Provider, and required to be remitted to the taxing entity, including sales and use taxes.

vii. Any forgone revenue from the provision of video service at no charge to any person, except that any forgone revenue exchanged for trades, barters, services, or other items of value shall be included in gross revenue.

viii. Sales of capital assets or surplus equipment.

ix. Reimbursement by programmers of marketing costs actually incurred by the Provider for the introduction of new programming.

x. The sale of video service for resale to the extent the purchaser certifies in writing that it will resell the service and pay a franchise fee with respect to the service.

E. In the case of a video service that is bundled or integrated functionally with other services, capabilities, or applications, the portion of the video Provider's revenue attributable to the other services, capabilities, or applications shall be included in gross revenue unless the Provider can reasonably identify the division or exclusion of the revenue from its books and records that are kept in the regular course of business.

F. Revenue of an affiliate shall be included in the calculation of gross revenues to the extent the treatment of the revenue as revenue of the affiliate has the effect of evading the payment of franchise fees which would otherwise be paid for video service.

G. The Provider is entitled to a credit applied toward the fees due under **Section 6(1) of the Act** for all funds allocated to the Franchising Entity from annual maintenance fees paid by the provider for use of public rights-of-way, minus any property tax credit allowed under **Section 8 of the Metropolitan Extension Telecommunications Rights-of-Way Oversight Act (METRO Act)**, 2002 PA 48, MCL 484.3108. The credits shall be applied on a monthly pro rata basis beginning in the first month of each calendar year in which the Franchising Entity receives its allocation of funds. The credit allowed under this subsection shall be calculated by multiplying the number of linear feet occupied by the Provider in the public rights-of-way of the Franchising Entity by the lesser of 5 cents or the amount assessed under the **METRO Act**. The Provider is not eligible for a credit under this section unless the provider has taken all property tax credits allowed under the **METRO Act**.

H. All determinations and computations made under this section shall be pursuant to generally accepted accounting principles.

I. Any claims by a Franchising Entity that fees have not been paid as required under **Section 6 of the Act**, and any claims for refunds or other corrections to the remittance of the Provider shall be made within 3 years from the date the compensation is remitted.

J. The Provider may identify and collect as a separate line item on the regular monthly bill of each subscriber an amount equal to the percentage established under **Section 6(1) of the Act**, applied against the amount of the subscriber's monthly bill.

K. The Franchising Entity shall not demand any additional fees or charges from a Provider and shall not demand the use of any other calculation method other than allowed under the Act.

VII. Public, Education, and Government (PEG) Channels

A. The video service Provider shall designate a sufficient amount of capacity on its network to provide for the same number of public, education, and government access channels that are in actual use on the incumbent video provider system on the **effective date of the Act** or as provided under **Section 4(14) of the Act**.

B. Any public, education, or government channel provided under this section that is not utilized by the Franchising Entity for at least 8 hours per day for 3 consecutive months may no longer be made available to the Franchising Entity and may be programmed at the Provider's discretion. At such a time as the Franchising Entity can certify a schedule for at least 8 hours of daily programming for a period of 3 consecutive months, the Provider shall restore the previously reallocated channel.

C. The Franchising Entity shall ensure that all transmissions, content, or programming to be retransmitted by a video service Provider is provided in a manner or form that is capable of being accepted and retransmitted by a Provider, without requirement for additional alteration or change in the content by the Provider, over the

particular network of the Provider, which is compatible with the technology or protocol utilized by the Provider to deliver services.

D. The person producing the broadcast is solely responsible for all content provided over designated public, education, or government channels. The video service Provider *shall not* exercise any editorial control over any programming on any channel designed for public, education, or government use.

E. The video service Provider is not subject to any civil or criminal liability for any program carried on any channel designated for public, education, or government use.

F. If a Franchising Entity seeks to utilize capacity pursuant to **Section 4(1) of the Act** or an agreement under **Section 13 of the Act** to provide access to video programming over one or more PEG channels, the Franchising Entity shall give the Provider a written request specifying the number of channels in actual use on the incumbent video provider's system or specified in the agreement entered into under **Section 13 of the Act**. The video service Provider shall have 90 days to begin providing access as requested by the Franchising Entity. The number and designation of PEG access channels shall be set forth in an addendum to this agreement effective 90 days after the request is submitted by the Franchising Entity.

G. A PEG channel shall only be used for noncommercial purposes.

VIII. PEG Fees

A. The video service Provider shall also pay to the Franchising Entity as support for the cost of PEG access facilities and services an annual fee equal to one of the following options:

1. If there is an existing Franchise on the effective date of the Act, the fee (enter the fee amount _____) paid to the Franchising Entity by the incumbent video Provider with the largest number of cable service subscribers in the Franchising Entity as determined by the existing Franchise Agreement;
2. At the expiration of the existing Franchise Agreement, the amount required under (1) above, which is _____% of gross revenues. (The amount under (1) above is not to exceed 2% of gross revenues);
3. If there is no existing Franchise Agreement, a percentage of gross revenues as established by the Franchising Entity and to be determined by a community need assessment, is _____% of gross revenues. (The percentage that is established by the Franchising Entity is not to exceed 2% of gross revenues.); and
4. An amount agreed to by the Franchising Entity and the video service Provider.

B. The fee required by this section shall be applicable to all providers, pursuant to Section 6(9) of the Act.

C. The fee shall be due on a quarterly basis and paid within 45 days after the close of the quarter. Each payment shall include a statement explaining the basis for the calculation of the fee.

D. All determinations and computations made under this section shall be pursuant to generally accepted accounting principles.

E. Any claims by a Franchising Entity that fees have not been paid as required under **Section 6 of the Act**, and any claims for refunds or other corrections to the remittance of the Provider shall be made within 3 years from the date the compensation is remitted.

F. The Provider may identify and collect as a separate line item on the regular monthly bill of each subscriber an amount equal to the percentage established under **Section 6(8) of the Act**, applied against the amount of the subscriber's monthly bill.

G. The Franchising Entity shall not demand any additional fees or charges from a Provider and shall not demand the use of any other calculation method other than allowed under the Act.

IX. Audits

A. No more than every 24 months, a Franchising Entity may perform reasonable audits of the video service Provider's calculation of the fees paid under **Section 6 of the Act** to the Franchising Entity during the preceding 24-month period only. All records reasonably necessary for the audits shall be made available by the Provider at the location where the records are kept in the ordinary course of business. The Franchising Entity and the video service Provider shall each be responsible for their respective costs of the audit. Any additional amount due verified by the Franchising Entity shall be paid by the Provider within 30 days of the Franchising Entity's submission of invoice for the sum. If the sum exceeds 5% of the total fees which the audit determines should have been paid for the 24-month period, the Provider shall pay the Franchising Entity's reasonable costs of the audit.

B. Any claims by a Franchising Entity that fees have not been paid as required under **Section 6 of the Act**, and any claims for refunds or other corrections to the remittance of the provider shall be made within 3 years from the date the compensation is remitted.

X. Termination and Modification

This Franchise Agreement issued by a Franchising Entity may be terminated or the video service area footprint may be modified, except as provided under **Section 9 of the Act**, by the Provider by submitting notice to the Franchising Entity. The Provider will use Attachment 2, when notifying the Franchising Entity.

XI. Transferability

This Franchise Agreement issued by a Franchising Entity or an existing franchise of an incumbent video service Provider is fully transferable to any successor in interest to the Provider to which it is initially granted. A notice of transfer shall be filed with the Franchising Entity within 15 days of the completion of the transfer. The Provider will use Attachment 2, when notifying the Franchising Entity. The successor in interest will assume the rights and responsibilities of the original provider and will also be required to complete their portion of the Transfer Agreement located within Attachment 2.

XII. Change of Information

If any of the information contained in the Franchise Agreement changes, the Provider shall timely notify the Franchising Entity. The Provider will use Attachment 2, when notifying the Franchising Entity.

XIII. Confidentiality

Pursuant to Section 11 of the Act: Except under the terms of a mandatory protective order, trade secrets and commercial or financial information designated as such and submitted under the Act to the Franchising Entity or Commission are exempt from the Freedom of Information Act, 1976 PA 442, MCL 15.231 to 15.246 and MUST BE KEPT CONFIDENTIAL.

A. The Provider may specify which items of information should be deemed "confidential." It is the responsibility of the provider to clearly identify and segregate any confidential information submitted to the franchising entity with the following information:

"[insert PROVIDER'S NAME]
[CONFIDENTIAL INFORMATION]"

B. The Franchising Entity receiving the information so designated as confidential is required (a) to protect such information from public disclosure, (b) exempt such information from any response to a FOIA request, and (c) make the information available only to and for use only by such local officials as are necessary to approve the franchise agreement or perform any other task for which the information is submitted.

C. Any Franchising Entity which disputes whether certain information submitted to it by a provider is entitled to confidential treatment under the Act may apply to the Commission for resolution of such a dispute. Unless and until the Commission determines that part or all of the information is not entitled to confidential treatment under the Act, the Franchising Entity shall keep the information confidential.

XIV. Complaints/Customer Service

A. The Provider shall establish a dispute resolution process for its customers. Provider shall maintain a local or toll-free telephone number for customer service contact.

B. The Provider shall be subjected to the penalties, as described under **Section 14 of the Act**, and the Franchising Entity and Provider may be subjected to the dispute process as described in **Section 10 of the Act**.

C. Each Provider shall annually notify its customers of the dispute resolution process required under **Section 10 of the Act**. Each Provider shall include the dispute resolution process on its website.

D. Before a customer may file a complaint with the Commission under **Section 10(5) of the Act**, the customer shall first attempt to resolve the dispute through the dispute resolution process established by the Provider in **Section 10(2) of the Act**.

E. A complaint between a customer and a Provider shall be handled by the Commission pursuant to the process as described in **Section 10(5) of the Act**.

F. A complaint between a Provider and a franchising entity or between two or more Providers shall be handled by the Commission pursuant to the process described in **Section 10(6) of the Act**.

G. In connection with providing video services to the subscribers, a provider shall not do any act prohibited by Section 10(1)(a-f) of the Act. The Commission may enforce compliance to the extent that the activities are not covered by **Section 2(3)(l) in the Act**.

XV. Notices

Any notices to be given under this Franchise Agreement shall be in writing and delivered to a Party personally, by facsimile or by certified, registered, or first-class mail, with postage prepaid and return receipt requested, or by a nationally recognized overnight delivery service, addressed as follows:

If to the Franchising Entity:
(must provide street address)

City of Livonia:

33000 Civic Center Drive

Livonia, Michigan 48154

Attn: Mayor or Clerk

Fax No.:

If to the Provider:
(must provide street address)

Charter Communications

12405 Powerscourt Drive

St. Louis, MO 63131

Attn: Legal Department

Fax No.: 314-965-6640

Or such other addresses or facsimile numbers as the Parties may designate by written notice from time to time.

XVI. Miscellaneous

A. Governing Law. This Franchise Agreement shall be governed by, and construed in accordance with, applicable Federal laws and laws of the State of Michigan.
B. The parties to this Franchise Agreement are subject to all valid and enforceable provisions of the Act.
C. Counterparts. This Agreement may be signed in one or more counterparts, each of which shall be deemed an original and all of which together shall constitute on and the same agreement.
D. Power to Enter. Each Party hereby warrants to the other Party that it has the requisite power and authority to enter into this Franchise Agreement and to perform according to the terms hereof.
E. The Provider and Franchising Entity are subject to the provisions of 2006 Public Act 480.

IN WITNESS WHEREOF, the Parties, by their duly authorized representatives, have executed this Franchise Agreement.

Cityof Livonia, **a Michigan Municipal Corporation**

By

Print Name

Title

33000 Civic Center Drive

Address

Livonia, Michigan 48154

City, State, Zip

(734) 466-2200

Phone

Fax

Email

Spectrum Mid-America, LLC, **a** Delaware Limited Liability **corporation doing business as** n/a

By

Print Name

Paul D. Abbott

Title

Vice President, Local Government Affair

Address

12405 Powerscourt Drive

City, State, Zip

St. Louis, MO 6313

Phone

774-243-9738

Fax

Email

FRANCHISE AGREEMENT *(Franchising Entity to Complete)*

Date submitted:
Date completed and approved:

ATTACHMENT 1

UNIFORM VIDEO SERVICE LOCAL FRANCHISE AGREEMENT
(Pursuant To 2006 Public Act 480)
(Form must be typed)

Date: April 21, 2025		
Applicant's Name: Spectrum Mid-America, LLC,		
Address 1: 12405 Powerscourt Drive		
Address 2:		Phone: 314-965-0555
City: St. Louis	State: Missouri	Zip: 63131
Federal I.D. No. (FEIN): 45-4593320		

Company executive officers:

Name(s): Christopher Winfrey
Title(s): President and Chief Executive Officer

Person(s) authorized to represent the company before the Franchising Entity and the Commission:

Name: Marilyn Passmore		
Title: Director, Government Affairs		
Address: 4670 E. Fulton, #102, Ada, MI 49301		
Phone: 616-607-2377	Fax: 616-975-1107	Email: marilyn.passmore@charter.com

Describe the video service area footprint as set forth in Section 2(3e) of the Act. (An exact description of the video service area footprint to be served, as identified by a geographic information system digital boundary meeting or exceeding national map accuracy standards.)

As an incumbent video provider, the Provider is satisfying this requirement by allowing the Franchising Entity to seek right-of-way related information comparable to that required by a permit under the metropolitan extension telecommunications rights-of-way oversight act, 2002 PA 48, MCL 484.3101 to 484.3120, as set forth in its last cable franchise from the Franchising Entity entered before the effective date of this Act."

The area provided for service is in the City of Livonia, MI. Upon request, the Provider shall provide a route map showing the location of the Cable System within the municipality, to the Franchising Entity.

[**Option A**: for Providers that Options B and C are not applicable, a description based on a geographic information system digital boundary meeting or exceeding national map accuracy standards]

[**Option B:** for Providers with 1,000,000 or more access lines in Michigan using telecommunication facilities to provide Video Service, a description based on entire wire centers or exchanges located in the Franchising Entity]

[**Option C**: for an Incumbent Video Service Provider, it satisfies this requirement by allowing the Franchising Entity to seek right-of-way information comparable to that required by a permit under the METRO Act as set forth in its last cable franchise or consent agreement from the Franchising Entity entered into before the effective date of the Act]

Pursuant to Section 2(3)(d) of the Act, if the Provider is not an incumbent video Provider, provide the date on which the Provider expects to provide video services in the area identified under Section 2(3)(e) (the Video Service Area Footprint).

Date: N/A

For All Applications:

Verification
(Provider)

I, Paul D. Abbott, of lawful age, and being first duly sworn, now states: As an officer of the Provider, I am authorized to do and hereby make the above commitments. I further affirm that all statements made above are true and correct to the best of my knowledge and belief.

Name and Title (printed): Paul D. Abbott, Vice President, Local Government Affairs	
Signature: Paul Abbott	*Date:* 04/24/2025

(Franchising Entity)

City of Livonia, **a Michigan municipal corporation**

By

Print Name

Title

33000 Civic Center Drive
Address

Livonia, MI 48154
City, State, Zip

(734) 466-2200
Phone

Fax

Email

Date