COUNCIL MEMBERS

KATHLEEN E. McINTYRE
PRESIDENT

SCOTT BAHR
VICE PRESIDENT

ROB GJONAJ DONOVIC
JIM JOLLY
BRANDON McCULLOUGH
LAURA M. TOY
CATHY K. WHITE

33000 CIVIC CENTER DRIVE
LIVONIA, MICHIGAN 48154-3097
(734) 466-2250
citycouncil@livonia.gov

OFFICE OF THE COUNCIL

ELECTRONIC AGENDA PACKET FOR THE REGULAR MEETING OF MONDAY, NOVEMBER 8, 2021 7:00 P.M.

The electronic agenda is compiled, produced and distributed by the City Council Staff.
(734) 466-2250

The official documents are on file in the City Clerk's office.

REVISED

1932nd Regular Meeting of the Council of the City of Livonia
Monday, November 8, 2021

7:00 p.m. – City Hall Auditorium
33000 Civic Center Drive
Livonia, Michigan

CALL TO ORDER

INVOCATION/PLEDGE OF ALLEGIANCE

ROLL CALL

PRESENTATION OF MINUTES - Minutes of the 1931st Regular Meeting of October 18, 2021

AUDIENCE COMMUNICATION

REPORTS FROM THE MAYOR AND OTHER CITY OFFICIALS

a. Communication from the Department of Finance, dated October 8, 2021, re: forwarding Quarterly Investment Report for the City of Livonia for the quarter ending August 31, 2021.

b. Communication from the Department of Finance, dated October 8, 2021, re: forwarding various financial statements of the City of Livonia for the month ending August 31, 2021.

CONSENT AGENDA

1. REAPPOINTMENT OF KEN HARB TO THE LIVONIA BROWNFIELD REDEVELOPMENT AUTHORITY: Office of the Mayor, re: for a term which will expire on November 24, 2024.

2. REAPPOINTMENT OF DILLON BREEN TO THE LIVONIA BROWNFIELD REDEVELOPMENT AUTHORITY: Office of the Mayor, re: for a term which will expire on November 24, 2024.

3. REQUEST TO EXTEND CONTRACT WITH HAVENER TECH, INC.: Department of Public Works, re: for as-needed repairs for the catch basin, storm sewer and concrete slab stabilization program, in an amount not to exceed $50,000 annually for two years, from budgeted funds. (CR 290-18)

4. REQUEST TO APPROVE FIVE YEAR EXTENSION OF THE LEASE OF FIVE (5) ACRES OF CITY OWNED PROPERTY LOCATED AT 32000 GLENDALE AVENUE: Department of Public Works, re: Mid-Michigan Recycling, L.C., for wood processing and disposal service. (CR 71-17)

5. REQUEST TO AUTHORIZE ADDITIONAL APPROPRIATION AND EXPENDITURE: Department of Public Works, re: for the additional scope of work through change order on the Cavell Street water main replacement project and provide payment to D&D Water and Sewer, Inc. in an amount not to exceed $43,752.59 for these services, from budgeted funds of the Water and Sewer Fund. (CR 180-21)

6. REQUEST TO APPROVE THE SIXTH AMENDMENT TO LEASE AGREEMENT BETWEEN THE CITY OF LIVONIA AND NEW CINGULAR WIRELESS PCS, LLC., d/b/a AT&T WIRELESS PCS, LLC: Department of Law, re: to accommodate request to move and upgrade the equipment on the tower. (CR 20-21, 241-20, 406-18, CR 29-12, CR 120-98, and CR 18-97)

UNFINISHED BUSINESS - MEETINGS OF THE COMMITTEE

7. **Senior Citizens and Families Committee Meeting of October 11, 2021**
Subject matter of noise waiver requests and acceptable decibel levels at events. (CR 262-21)

UNFINISHED BUSINESS

8. REQUEST TO PURCHASE CITY-OWNED PROPERTY: Zak Alzught, re: offer to purchase City-owned property at 29660 Gaylord Court.

9. SITE PLAN PETITION: Planning Commission, re: Petition 2021-08-08-05 submitted by Hellyer Lewis requesting to remodel the exterior of the Citizens Bank at 37307 Six Mile Road, located on the south side of Six Mile Road between Levan and Newburgh Roads in the Northwest ¼ of Section 17.

NEW BUSINESS

10. ACCEPTANCE OF QUIT CLAIM DEED: Department of Law, re: secured without monetary consideration from Adams Park Development, LLC, to obtain the right-of-way for property adjacent to Lyndon Park Site Condominiums, located in the South 1/2 of Section 24 (Parcel ID's 46-095-99-0011-000 and 46-096-99-0004-000)

AUDIENCE COMMUNICATION

SUSAN M. NASH, CITY CLERK

In accordance with Title II of the American with Disabilities Act as it pertains to access to Public Meetings, the City Clerk's Office of the City of Livonia, upon adequate notice, will make reasonable accommodations for persons with special needs. Please call (734) 466-2236 or email clerk@livonia.gov if you need assistance. Council agendas are available on the City's website – www.livonia.gov - under Government, City Council, Agendas.

LETTER TO THE LIVONIA CITY COUNCIL

Finance
October 8, 2021

MEETING DATE	PREPARED BY
November 8, 2021	DeAnne Bates, Program Supervisor

AGENDA ITEM

a. Communication from the Department of Finance, dated October 8, 2021, re: forwarding Quarterly Investment Report for the City of Livonia for the quarter ending August 31, 2021.

BACKGROUND

Public Act 213 of 2007 requires that a quarterly written report shall be provided to the governing body regarding the investment of public funds. Attached for Council's information is a summary of investments for the City of Livonia as of August 31, 2021. All investments are in compliance with the City's Investment Policy and Michigan Public Act 20.

RECOMMENDATION

We respectfully request that City Council receive and file this report.

FISCAL CONSIDERATION

N/A

ATTACHMENTS

1. 2021 Quarterly Investment Report - Third Quarter

APPROVED BY

Michael T Slater

Michael Slater, Finance Director — Date: October 08, 2021

Maureen Miller Brosnan

Maureen Miller Brosnan, Mayor — Date: October 08, 2021

CERTIFICATES OF DEPOSITS HELD
As of
August 31, 2021

DATE OF PURCHASE	CERTIFICATE HELD AT	PRINCIPAL AMOUNT	DATE OF MATURITY
05/18/21	TCF	3,000,000.00	09/07/21
05/25/21	TCF	5,000,000.00	09/14/21
06/01/21	FLAG	2,000,000.00	09/21/21
06/08/21	FLAG	4,000,000.00	09/28/21
06/15/21	FLAG	6,000,000.00	10/05/21
06/22/21	FLAG	2,000,000.00	10/12/21
06/29/21	FLAG	1,000,000.00	10/19/21
07/06/21	FLAG	1,000,000.00	10/26/21
07/13/21	FLAG	2,000,000.00	11/02/21
07/20/21	FLAG	3,000,000.00	11/09/21
07/27/21	TCF	2,000,000.00	11/16/21
08/03/21	TCF	2,000,000.00	12/07/21
08/10/21	TCF	2,000,000.00	12/14/21
08/17/21	TCF	3,000,000.00	12/21/21
08/24/21	TCF	2,000,000.00	12/28/21
08/31/21	TCF	3,000,000.00	01/04/22
		43,000,000.00	

SCHEDULE OF POOLED CASH HELD
AS OF
August 31, 2021

08/31/21	Comerica Bank	Money Mkt, Pooled, etc.	40,939,840.58
08/31/21	Flagstar	Money Market	83,821.18
			41,023,661.76

SCHEDULE OF U.S. TREASURY AND AGENCY SECURITIES HELD

DATE OF PURCHASE	DESCRIPTION		MATURITY DATE	HISTORICAL COST	
03/04/19	#246 - FFCB	3133EKBV7	03/01/22	998,850.00	
03/08/19	#247 - FHLB	313376C94	12/10/21	1,340,420.10	
04/15/19	#248 - USA Treasury	912828XG0	06/30/22	1,042,210.55	
05/24/19	#249 - FHLMC	313380GJ0	09/09/22	1,042,009.50	
06/21/19	#250 - FHLMC	3130A3KM5	12/09/22	819,264.00	
06/21/19	#251 - USA Treasury	9128283C2	10/31/22	1,009,573.66	
09/16/19	#252 - USA Treasury	9128284U1	06/30/23	1,170,073.53	
09/30/19	#253 - USA Treasury	912828VB3	05/15/23	1,005,664.06	
10/31/19	#254 - FNMA	3135G0V34	02/05/24	1,083,610.50	
11/15/19	#255 - USA Treasury	9128285K2	10/31/23	1,116,607.10	
01/31/20	#256 - USA Treasury	912828Y61	07/31/23	1,125,138.67	
02/21/20	#257 - FFCB	3133ELNW0	02/21/23	1,080,979.56	
03/20/20	#259 - FFCB	3133ELNP5	02/24/22	1,522,125.00	
04/07/20	#262 - FHLB	313382AX1	03/10/23	1,046,110.00	
06/24/20	#266 - FHLMC	3134GVV96	06/24/24	675,000.00	
07/08/20	#267 - FHLMC	3134GV4S4	07/08/24	600,000.00	
08/13/20	#269 - FHLMC	3134GWHR0	05/13/24	1,000,000.00	
08/26/20	#270 - FNMA	3136G4V75	02/24/25	1,298,781.25	
09/17/20	#271 - FNMA	3135G0X24	01/07/25	1,422,117.00	
10/30/20	#272 - FNMA	3136G46A6	10/27/23	984,753.75	
12/16/20	#273 - FNMA	3135G06M0	12/16/24	1,300,000.00	
01/11/21	#274 - FHLB	3130AKK21	12/08/23	650,117.00	
01/28/21	#275 - FNMA	3135GACA7	04/15/25	1,124,212.50	
02/26/21	#276 - USA Treasury	912828TJ9	08/25/22	1,200,569.37	
04/30/21	#277 - USA Treasury	9128286R6	04/30/24	697,408.59	
04/30/21	#278 - USA Treasury	912828TY6	11/15/22	675,213.15	
05/26/21	#279 - FHLB	3130AMK92	11/26/24	1,500,000.00	
07/02/21	#280 - STATE OF MI	594612BD4	05/15/27	1,261,584.00	
08/24/21	#281 - USA Treasury	912828YH7	09/30/24	1,135,664.06	
08/31/21	SECURITIES - TOTAL				30,928,056.89
08/31/21	SECURITIES - POOLED FUND				27,944.90
					30,956,001.79

LETTER TO THE LIVONIA CITY COUNCIL

Finance
October 8, 2021

MEETING DATE	PREPARED BY
November 8, 2021	DeAnne Bates, Program Supervisor

AGENDA ITEM

b. Communication from the Department of Finance, dated October 8, 2021, re: forwarding various financial statements of the City of Livonia for the month ending August 31, 2021.

BACKGROUND

Attached hereto are the various financial statements of the City of Livonia for the month ending August 31, 2021. These statements are summarized so that you may make a quick financial overview of the various funds. Detailed statements, in support of the summarized statements, have been forwarded electronically to the Council Office.

RECOMMENDATION

Receive and File

FISCAL CONSIDERATION

N/A

ATTACHMENTS

1. BUDGET TO ACTUAL - COUNCIL SUMMARY - AUGUST 2021

APPROVED BY

Michael T Slater

Michael Slater, Finance Director — Date: October 08, 2021

Maureen Miller Brosnan

Maureen Miller Brosnan, Mayor — Date: October 08, 2021

BUDGET TO ACTUAL - COUNCIL SUMMARY - 8/31/2021

Through 08/31/21

Prior Fiscal Year Activity Included

Organization		Adopted Budget	Budget Amendments	Amended Budget	Current Month Transactions	YTD Encumbrances	YTD Transactions	Budget - YTD Transactions	% Used/ Rec'd	Prior Year YTD
Fund	**101 - GENERAL FUND**									
REVENUE										
Department	**000 - ACCOUNT BALANCES**	63,341,002.00	.00	63,341,002.00	3,153,867.60	.00	58,737,392.69	4,603,609.31	93	53,594,429.97
	REVENUE TOTALS	$63,341,002.00	$0.00	$63,341,002.00	$3,153,867.60	$0.00	$58,737,392.69	$4,603,609.31	93%	$53,594,429.97
EXPENSE										
Department	**101 - CITY COUNCIL**	294,142.00	.00	294,142.00	21,664.58	.00	199,552.87	94,589.13	68	267,187.94
Department	**173 - MAYOR'S OFFICE**	602,660.00	.00	602,660.00	47,865.75	.00	423,468.03	179,191.97	70	417,697.32
Department	**174 - COMMUNICATIONS**	488,422.00	.00	488,422.00	31,780.76	.00	278,437.50	209,984.50	57	.00
Department	**175 - GOVERNMENT AFFAIRS**	.00	.00	.00	.00	.00	.00	.00	+++	.00
Department	**191 - ACCOUNTING**	234,432.00	.00	234,432.00	26,457.36	.00	141,469.16	92,962.84	60	123,415.56
Department	**192 - FINANCE DEPARTMENT**	418,272.00	.00	418,272.00	32,899.79	.00	293,582.95	124,689.05	70	277,826.37
Department	**215 - CITY CLERK**	647,082.00	5,000.00	652,082.00	44,774.89	.00	451,161.79	200,920.21	69	391,482.94
Department	**223 - INDEPENDENT AUDIT**	35,609.00	.00	35,609.00	(1,220.00)	.00	41,822.04	(6,213.04)	117	34,277.99
Department	**228 - INFORMATION SYSTEMS**	1,194,503.00	.00	1,194,503.00	48,030.21	8,463.12	928,528.83	257,511.05	78	697,210.95
Department	**236 - ETHICS BOARD**	400.00	.00	400.00	.00	.00	177.20	222.80	44	27.52
Department	**238 - NON DEPARTMENTAL**	4,000.00	.00	4,000.00	.00	.00	.00	4,000.00	0	.00
Department	**247 - BOARD OF REVIEW**	3,545.00	.00	3,545.00	.00	.00	2,755.84	789.16	78	2,432.89
Department	**253 - TREASURER**	566,689.00	.00	566,689.00	41,038.32	6,136.80	367,136.33	193,415.87	66	358,129.39
Department	**256 - TERMINATION PAY**	950,000.00	.00	950,000.00	83,946.96	.00	896,684.00	53,316.00	94	576,349.39
Department	**257 - ASSESSING**	548,658.00	.00	548,658.00	46,135.79	.00	363,019.16	185,638.84	66	332,513.90
Department	**261 - UTILITIES AND SUPPLIES**	608,247.00	.00	608,247.00	11,807.01	.00	276,264.94	331,982.06	45	240,436.32
Department	**262 - ELECTION COMMISSION**	348,186.00	(5,000.00)	343,186.00	16,188.65	8,540.44	69,077.33	265,568.23	23	143,237.62
Department	**263 - INSURANCE-GENERAL**	91,711.00	.00	91,711.00	(3,607.00)	.00	90,831.64	879.36	99	84,999.76
Department	**264 - INSURANCE-WORKERS COMP**	325,299.00	.00	325,299.00	(2,211.35)	.00	421,460.50	(96,161.50)	130	212,560.06
Department	**266 - LAW DEPARTMENT**	850,822.00	.00	850,822.00	64,393.64	583.84	594,841.95	255,396.21	70	565,897.90
Department	**267 - EMPLOYEE BENEFITS CONTROL**	42,000.00	.00	42,000.00	198,841.04	.00	(578,278.93)	620,278.93	-1377	(873,487.19)
Department	**268 - NON-DEPT CAPITAL PROJECTS**	531,000.00	.00	531,000.00	2,328.31	.00	527,328.31	3,671.69	99	1,027,373.20
Department	**269 - CIVIL SERVICE**	821,138.00	.00	821,138.00	73,442.94	.00	472,210.79	348,927.21	58	449,460.88
Department	**271 - LABOR RELATIONS**	96,500.00	.00	96,500.00	4,865.00	.00	47,367.50	49,132.50	49	46,043.16
Department	**272 - DUES AND SUBSCRIPTIONS**	51,000.00	.00	51,000.00	17,815.00	.00	30,404.00	20,596.00	60	39,642.00
Department	**286 - 16TH DISTRICT COURT**	3,323,235.00	.00	3,323,235.00	193,860.78	3,594.60	2,109,430.25	1,210,210.15	64	1,828,796.14
Department	**302 - TRAFFIC BUREAU**	1,215,460.00	.00	1,215,460.00	71,253.72	80,595.00	608,141.13	526,723.87	57	658,192.71
Department	**304 - POLICE ADMINISTRATION**	2,734,212.00	96,000.00	2,830,212.00	144,942.94	55,861.26	1,503,611.67	1,270,739.07	55	1,408,942.21
Department	**306 - POLICE DATA PROCESSING**	853,721.00	6,000.00	859,721.00	53,383.74	12,714.19	593,737.29	253,269.52	71	559,629.65
Department	**307 - DETECTIVE BUREAU**	3,400,555.00	26,000.00	3,426,555.00	223,651.81	14,150.00	2,468,855.49	943,549.51	72	2,119,785.17
Department	**309 - AUTOMOTIVE SERVICE**	556,150.00	.00	556,150.00	43,884.74	.00	333,555.08	222,594.92	60	236,770.61
Department	**310 - POLICE COMMUNICATIONS**	973,482.00	.00	973,482.00	58,077.91	33,424.00	512,772.34	427,285.66	56	550,609.49
Department	**313 - CROSSING GUARDS**	70,723.00	.00	70,723.00	250.00	.00	30,163.45	40,559.55	43	20,832.42
Department	**316 - SCHOOL LIAISON**	411,632.00	.00	411,632.00	10,334.31	.00	253,292.10	158,339.90	62	272,705.80
Department	**318 - OFFICE OF EMERG PREP**	133,515.00	.00	133,515.00	10,487.03	.00	85,062.25	48,452.75	64	76,967.94
Department	**319 - RESERVE POL/SPECIAL EVENT**	342,593.00	.00	342,593.00	25,550.39	.00	235,799.37	106,793.63	69	165,707.90

BUDGET TO ACTUAL - COUNCIL SUMMARY - 8/31/2021

Through 08/31/21

Prior Fiscal Year Activity Included

Organization	Adopted Budget	Budget Amendments	Amended Budget	Current Month Transactions	YTD Encumbrances	YTD Transactions	Budget - YTD Transactions	% Used/ Rec'd	Prior Year YTD
Fund **101 - GENERAL FUND**									
EXPENSE									
Department **325 - POLICE PATROL BUREAU**	13,476,216.00	(128,000.00)	13,348,216.00	916,908.31	180,533.57	7,856,913.72	5,310,768.71	60	7,264,344.84
Department **329 - INTELLIGENCE BUREAU**	2,372,561.00	.00	2,372,561.00	113,197.80	92,439.00	1,180,893.61	1,099,228.39	54	1,181,835.24
Department **336 - FIRE ADMINISTRATION**	1,260,045.00	(4,190.00)	1,255,855.00	94,889.27	1,723.36	880,369.17	373,762.47	70	805,472.71
Department **338 - FIRE FIGHTING**	13,357,355.00	9,117.00	13,366,472.00	997,165.79	231,452.10	9,576,467.86	3,558,552.04	73	7,637,133.98
Department **341 - FIRE PREVENTION**	824,309.00	(4,927.00)	819,382.00	57,236.42	.00	610,571.55	208,810.45	75	483,749.11
Department **371 - INSPECTION**	1,685,617.00	.00	1,685,617.00	112,797.29	.00	1,035,615.03	650,001.97	61	876,115.38
Department **381 - BLDG CODE BD OF APPEALS**	861.00	.00	861.00	.00	.00	.00	861.00	0	.00
Department **435 - TRAFFIC COMMISSION**	2,353.00	.00	2,353.00	145.32	.00	1,227.20	1,125.80	52	608.22
Department **441 - PUBLIC SERV ADMIN**	8,391.00	(2,200.00)	6,191.00	(29,055.85)	.00	(179,745.70)	185,936.70	-2903	(147,429.07)
Department **443 - PUBLIC SERV-EQUIP MAINT**	213,125.00	.00	213,125.00	(15,221.78)	25,154.01	(160,876.25)	348,847.24	-64	(255,861.43)
Department **447 - ENGINEERING**	1,269.00	2,200.00	3,469.00	(7,058.85)	.00	(93,407.98)	96,876.98	-2693	(130,141.53)
Department **448 - STREET LIGHTING**	231,648.00	.00	231,648.00	16,639.62	.00	154,316.87	77,331.13	67	191,983.90
Department **463 - MAINTENANCE-STREET**	453,716.00	.00	453,716.00	(16,911.29)	13,315.99	22,002.97	418,397.04	8	(108,532.09)
Department **523 - PUBLIC SERV-BLDG MAINT**	1,598,450.00	.00	1,598,450.00	95,216.17	87,311.39	977,554.67	533,583.94	67	2,702,852.43
Department **524 - PARKS**	1,425,183.00	.00	1,425,183.00	86,917.82	25,636.03	633,827.64	765,719.33	46	573,908.40
Department **701 - PLANNING**	726,945.00	.00	726,945.00	46,457.72	5,299.98	454,244.40	267,400.62	63	419,263.51
Department **702 - ZONING BOARD OF APPEALS**	113,232.00	.00	113,232.00	3,843.66	.00	37,792.82	75,439.18	33	31,372.03
Department **752 - RECREATION ADMINISTRATION**	164,486.00	.00	164,486.00	9,084.19	.00	87,208.70	77,277.30	53	257,138.24
Department **758 - RECREATION FACILITIES**	28,825.00	13,800.00	42,625.00	4,791.34	11,500.00	18,114.49	13,010.51	69	374,984.21
Department **759 - RECREATION ATHLETICS**	89,925.00	(13,800.00)	76,125.00	14,606.69	796.05	63,344.33	11,984.62	84	27,877.30
Department **820 - PARKS & REC - SENIOR SERVICES**	610,066.00	.00	610,066.00	41,898.85	.00	387,536.62	222,529.38	64	311,333.83
Department **821 - P&R - GREENMEAD AND CULTURAL**	917,520.00	.00	917,520.00	68,497.18	4,709.17	595,262.86	317,547.97	65	579,189.21
EXPENSE TOTALS	$63,331,693.00	$0.00	$63,331,693.00	$4,254,960.69	$903,933.90	$39,212,958.73	$23,214,800.37	63%	$36,390,854.33
Fund **101 - GENERAL FUND** Totals									
REVENUE TOTALS	63,341,002.00	.00	63,341,002.00	3,153,867.60	.00	58,737,392.69	4,603,609.31	93%	53,594,429.97
EXPENSE TOTALS	63,331,693.00	.00	63,331,693.00	4,254,960.69	903,933.90	39,212,958.73	23,214,800.37	63%	36,390,854.33
Fund **101 - GENERAL FUND** Totals	$9,309.00	$0.00	$9,309.00	($1,101,093.09)	($903,933.90)	$19,524,433.96	($18,611,191.06)		$17,203,575.64

BUDGET TO ACTUAL - COUNCIL SUMMARY - 8/31/2021

Through 08/31/21

Prior Fiscal Year Activity Included

Organization	Adopted Budget	Budget Amendments	Amended Budget	Current Month Transactions	YTD Encumbrances	YTD Transactions	Budget - YTD Transactions	% Used/ Rec'd	Prior Year YTD
Fund **202 - MAJOR STREET FUND**									
REVENUE									
Department **000 - ACCOUNT BALANCES**	8,501,865.00	.00	8,501,865.00	715,648.49	.00	4,872,212.33	3,629,652.67	57	4,391,204.62
REVENUE TOTALS	$8,501,865.00	$0.00	$8,501,865.00	$715,648.49	$0.00	$4,872,212.33	$3,629,652.67	57%	$4,391,204.62
EXPENSE									
Department **448 - STREET LIGHTING**	602,433.00	.00	602,433.00	39,000.00	.00	485,433.00	117,000.00	81	432,737.00
Department **451 - CONST-STREET AND BRIDGES**	60,000.00	.00	60,000.00	.00	.00	.00	60,000.00	0	.00
Department **463 - MAINTENANCE-STREET**	1,202,599.00	277,054.00	1,479,653.00	47,553.10	.00	505,245.96	974,407.04	34	759,845.21
Department **475 - MAINTENANCE-TRAFFIC SERV**	.00	.00	.00	.00	.00	.00	.00	+++	.00
Department **478 - MAINT-FREEWAY LIGHTING**	25,000.00	.00	25,000.00	1,305.68	.00	11,833.58	13,166.42	47	11,765.31
Department **479 - SNOW AND ICE REMOVAL**	728,799.00	.00	728,799.00	29,526.50	.00	248,710.50	480,088.50	34	236,439.00
Department **483 - ADMIN, ENGIN RECORD KEEPI**	183,138.00	.00	183,138.00	15,261.00	.00	137,349.00	45,789.00	75	256,873.50
Department **484 - FUND TRANSFERS**	7,200,000.00	.00	7,200,000.00	600,000.00	.00	5,400,000.00	1,800,000.00	75	4,950,000.00
EXPENSE TOTALS	$10,001,969.00	$277,054.00	$10,279,023.00	$732,646.28	$0.00	$6,788,572.04	$3,490,450.96	66%	$6,647,660.02
Fund **202 - MAJOR STREET FUND** Totals									
REVENUE TOTALS	8,501,865.00	.00	8,501,865.00	715,648.49	.00	4,872,212.33	3,629,652.67	57%	4,391,204.62
EXPENSE TOTALS	10,001,969.00	277,054.00	10,279,023.00	732,646.28	.00	6,788,572.04	3,490,450.96	66%	6,647,660.02
Fund **202 - MAJOR STREET FUND** Totals	($1,500,104.00)	($277,054.00)	($1,777,158.00)	($16,997.79)	$0.00	($1,916,359.71)	$139,201.71		($2,256,455.40)

BUDGET TO ACTUAL - COUNCIL SUMMARY - 8/31/2021

Through 08/31/21

Prior Fiscal Year Activity Included

Organization	Adopted Budget	Budget Amendments	Amended Budget	Current Month Transactions	YTD Encumbrances	YTD Transactions	Budget - YTD Transactions	% Used/ Rec'd	Prior Year YTD
Fund **203 - LOCAL STREET FUND**									
REVENUE									
Department **000 - ACCOUNT BALANCES**	10,435,624.00	.00	10,435,624.00	871,184.92	.00	7,246,188.73	3,189,435.27	69	6,615,703.06
REVENUE TOTALS	$10,435,624.00	$0.00	$10,435,624.00	$871,184.92	$0.00	$7,246,188.73	$3,189,435.27	69%	$6,615,703.06
EXPENSE									
Department **448 - STREET LIGHTING**	118,000.00	.00	118,000.00	9,833.00	.00	88,497.00	29,503.00	75	76,500.00
Department **451 - CONST-STREET AND BRIDGES**	125,000.00	.00	125,000.00	.00	.00	.00	125,000.00	0	.00
Department **463 - MAINTENANCE-STREET**	1,559,669.00	.00	1,559,669.00	120,596.00	.00	1,085,364.00	474,305.00	70	946,966.27
Department **475 - MAINTENANCE-TRAFFIC SERV**	.00	.00	.00	.00	.00	.00	.00	+++	.00
Department **479 - SNOW AND ICE REMOVAL**	421,437.00	.00	421,437.00	35,117.00	.00	316,053.00	105,384.00	75	311,643.00
Department **483 - ADMIN, ENGIN RECORD KEEPI**	654,768.00	.00	654,768.00	54,562.00	.00	491,058.00	163,710.00	75	341,919.00
Department **484 - FUND TRANSFERS**	7,900,000.00	.00	7,900,000.00	658,333.00	.00	5,924,997.00	1,975,003.00	75	5,924,997.00
EXPENSE TOTALS	$10,778,874.00	$0.00	$10,778,874.00	$878,441.00	$0.00	$7,905,969.00	$2,872,905.00	73%	$7,602,025.27
Fund **203 - LOCAL STREET FUND** Totals									
REVENUE TOTALS	10,435,624.00	.00	10,435,624.00	871,184.92	.00	7,246,188.73	3,189,435.27	69%	6,615,703.06
EXPENSE TOTALS	10,778,874.00	.00	10,778,874.00	878,441.00	.00	7,905,969.00	2,872,905.00	73%	7,602,025.27
Fund **203 - LOCAL STREET FUND** Totals	($343,250.00)	$0.00	($343,250.00)	($7,256.08)	$0.00	($659,780.27)	$316,530.27		($986,322.21)

BUDGET TO ACTUAL - COUNCIL SUMMARY - 8/31/2021

Through 08/31/21

Prior Fiscal Year Activity Included

Organization	Adopted Budget	Budget Amendments	Amended Budget	Current Month Transactions	YTD Encumbrances	YTD Transactions	Budget - YTD Transactions	% Used/ Rec'd	Prior Year YTD
Fund **204 - ROAD - SIDEWALK & TREE**									
REVENUE									
Department **000 - ACCOUNT BALANCES**	12,222,041.00	.00	12,222,041.00	658,192.15	.00	10,253,939.26	1,968,101.74	84	10,149,160.37
REVENUE TOTALS	$12,222,041.00	$0.00	$12,222,041.00	$658,192.15	$0.00	$10,253,939.26	$1,968,101.74	84%	$10,149,160.37
EXPENSE									
Department **441 - PUBLIC SERV ADMIN**	33,794.00	.00	33,794.00	2,816.00	.00	25,344.00	8,450.00	75	20,745.00
Department **447 - ENGINEERING**	2,287,000.00	184,387.00	2,471,387.00	425,422.58	.00	1,219,815.31	1,251,571.69	49	836,837.61
Department **463 - MAINTENANCE-STREET**	10,115,000.00	1,959,553.00	12,074,553.00	1,003,988.82	.00	5,460,810.10	6,613,742.90	45	5,859,349.28
Department **530 - FORESTRY**	125,000.00	5,058.00	130,058.00	127,846.00	.00	127,846.00	2,212.00	98	101,160.00
EXPENSE TOTALS	$12,560,794.00	$2,148,998.00	$14,709,792.00	$1,560,073.40	$0.00	$6,833,815.41	$7,875,976.59	46%	$6,818,091.89
Fund **204 - ROAD - SIDEWALK & TREE** Totals									
REVENUE TOTALS	12,222,041.00	.00	12,222,041.00	658,192.15	.00	10,253,939.26	1,968,101.74	84%	10,149,160.37
EXPENSE TOTALS	12,560,794.00	2,148,998.00	14,709,792.00	1,560,073.40	.00	6,833,815.41	7,875,976.59	46%	6,818,091.89
Fund **204 - ROAD - SIDEWALK & TREE** Totals	($338,753.00)	($2,148,998.00)	($2,487,751.00)	($901,881.25)	$0.00	$3,420,123.85	($5,907,874.85)		$3,331,068.48

BUDGET TO ACTUAL - COUNCIL SUMMARY - 8/31/2021

Through 08/31/21

Prior Fiscal Year Activity Included

Organization	Adopted Budget	Budget Amendments	Amended Budget	Current Month Transactions	YTD Encumbrances	YTD Transactions	Budget - YTD Transactions	% Used/ Rec'd	Prior Year YTD
Fund **208 - COMMUNITY RECREATION**									
REVENUE									
Department **000 - ACCOUNT BALANCES**	6,956,311.00	22,600.00	6,978,911.00	287,360.19	.00	5,762,532.19	1,216,378.81	83	4,726,161.50
REVENUE TOTALS	$6,956,311.00	$22,600.00	$6,978,911.00	$287,360.19	$0.00	$5,762,532.19	$1,216,378.81	83%	$4,726,161.50
EXPENSE									
Department **755 - RECREATION CENTER**	6,900,217.00	199,013.00	7,099,230.00	374,967.97	219,970.80	4,387,954.46	2,491,304.74	65	3,952,345.99
Department **756 - OTHER RECREATION**	22,100.00	165,000.00	187,100.00	572.00	150,750.00	17,093.75	19,256.25	90	25,432.75
Department **757 - ICE RINK**	392,814.00	.00	392,814.00	500.00	.00	352,858.53	39,955.47	90	347,239.30
Department **776 - SPECIAL EVENTS**	93,060.00	.00	93,060.00	26,771.05	.00	66,102.96	26,957.04	71	49,300.33
Department **795 - SWIMMING POOL - BOTSFORD**	274,160.00	101,980.00	376,140.00	21,379.38	76.00	310,559.24	65,504.76	83	88,425.70
Department **796 - SWIMMING POOL - CLEMENT C**	140,082.00	23,130.00	163,212.00	33,985.71	152.00	65,819.60	97,240.40	40	68,252.22
Department **797 - SWIMMING POOL - SHELDON**	162,922.00	(16,110.00)	146,812.00	3,514.48	6,202.00	32,014.13	108,595.87	26	1,064.58
EXPENSE TOTALS	$7,985,355.00	$473,013.00	$8,458,368.00	$461,690.59	$377,150.80	$5,232,402.67	$2,848,814.53	66%	$4,532,060.87
Fund **208 - COMMUNITY RECREATION** Totals									
REVENUE TOTALS	6,956,311.00	22,600.00	6,978,911.00	287,360.19	.00	5,762,532.19	1,216,378.81	83%	4,726,161.50
EXPENSE TOTALS	7,985,355.00	473,013.00	8,458,368.00	461,690.59	377,150.80	5,232,402.67	2,848,814.53	66%	4,532,060.87
Fund **208 - COMMUNITY RECREATION** Totals	($1,029,044.00)	($450,413.00)	($1,479,457.00)	($174,330.40)	($377,150.80)	$530,129.52	($1,632,435.72)		$194,100.63

BUDGET TO ACTUAL - COUNCIL SUMMARY - 8/31/2021

Through 08/31/21

Prior Fiscal Year Activity Included

Organization	Adopted Budget	Budget Amendments	Amended Budget	Current Month Transactions	YTD Encumbrances	YTD Transactions	Budget - YTD Transactions	% Used/ Rec'd	Prior Year YTD
Fund **211 - DESIGNATED PURPOSE**									
REVENUE									
Department **000 - ACCOUNT BALANCES**	120,000.00	150.00	120,150.00	41,410.50	.00	60,400.84	59,749.16	50	34,418.25
REVENUE TOTALS	$120,000.00	$150.00	$120,150.00	$41,410.50	$0.00	$60,400.84	$59,749.16	50%	$34,418.25
EXPENSE									
Department **000 - ACCOUNT BALANCES**	120,000.00	45,000.00	165,000.00	3,510.95	10,140.00	28,777.60	126,082.40	24	32,999.38
EXPENSE TOTALS	$120,000.00	$45,000.00	$165,000.00	$3,510.95	$10,140.00	$28,777.60	$126,082.40	24%	$32,999.38
Fund **211 - DESIGNATED PURPOSE** Totals									
REVENUE TOTALS	120,000.00	150.00	120,150.00	41,410.50	.00	60,400.84	59,749.16	50%	34,418.25
EXPENSE TOTALS	120,000.00	45,000.00	165,000.00	3,510.95	10,140.00	28,777.60	126,082.40	24%	32,999.38
Fund **211 - DESIGNATED PURPOSE** Totals	$0.00	($44,850.00)	($44,850.00)	$37,899.55	($10,140.00)	$31,623.24	($66,333.24)		$1,418.87

BUDGET TO ACTUAL - COUNCIL SUMMARY - 8/31/2021

Through 08/31/21

Prior Fiscal Year Activity Included

Organization	Adopted Budget	Budget Amendments	Amended Budget	Current Month Transactions	YTD Encumbrances	YTD Transactions	Budget - YTD Transactions	% Used/ Rec'd	Prior Year YTD
Fund **226 - MUNICIPAL REFUSE FUND**									
REVENUE									
Department **000 - ACCOUNT BALANCES**	11,986,251.00	.00	11,986,251.00	39,637.08	.00	11,875,925.89	110,325.11	99	11,823,194.53
REVENUE TOTALS	$11,986,251.00	$0.00	$11,986,251.00	$39,637.08	$0.00	$11,875,925.89	$110,325.11	99%	$11,823,194.53
EXPENSE									
Department **521 - SANITATION**	1,159,639.00	28,000.00	1,187,639.00	84,209.91	30,630.50	752,127.89	404,880.61	66	702,732.02
Department **528 - PUBLIC SERVICE**	10,876,144.00	188,584.00	11,064,728.00	1,253,378.40	89,690.66	7,621,487.07	3,353,550.27	70	6,926,660.58
Department **529 - ANIMAL CONTROL**	313,799.00	2,300.00	316,099.00	18,744.39	274.54	165,633.91	150,190.55	52	313,306.72
EXPENSE TOTALS	$12,349,582.00	$218,884.00	$12,568,466.00	$1,356,332.70	$120,595.70	$8,539,248.87	$3,908,621.43	69%	$7,942,699.32
Fund **226 - MUNICIPAL REFUSE FUND** Totals									
REVENUE TOTALS	11,986,251.00	.00	11,986,251.00	39,637.08	.00	11,875,925.89	110,325.11	99%	11,823,194.53
EXPENSE TOTALS	12,349,582.00	218,884.00	12,568,466.00	1,356,332.70	120,595.70	8,539,248.87	3,908,621.43	69%	7,942,699.32
Fund **226 - MUNICIPAL REFUSE FUND** Totals	($363,331.00)	($218,884.00)	($582,215.00)	($1,316,695.62)	($120,595.70)	$3,336,677.02	($3,798,296.32)		$3,880,495.21

BUDGET TO ACTUAL - COUNCIL SUMMARY - 8/31/2021

Through 08/31/21

Prior Fiscal Year Activity Included

Organization	Adopted Budget	Budget Amendments	Amended Budget	Current Month Transactions	YTD Encumbrances	YTD Transactions	Budget - YTD Transactions	% Used/ Rec'd	Prior Year YTD
Fund **242 - LIVONIA BROWNFIELD - LSRRF**									
REVENUE									
Department **000 - ACCOUNT BALANCES**	83,000.00	.00	83,000.00	(4.96)	.00	35,683.76	47,316.24	43	28,131.94
REVENUE TOTALS	$83,000.00	$0.00	$83,000.00	($4.96)	$0.00	$35,683.76	$47,316.24	43%	$28,131.94
EXPENSE									
Department **000 - ACCOUNT BALANCES**	40,627.00	.00	40,627.00	2,552.26	.00	22,970.26	17,656.74	57	.00
EXPENSE TOTALS	$40,627.00	$0.00	$40,627.00	$2,552.26	$0.00	$22,970.26	$17,656.74	57%	$0.00
Fund **242 - LIVONIA BROWNFIELD - LSRRF** Totals									
REVENUE TOTALS	83,000.00	.00	83,000.00	(4.96)	.00	35,683.76	47,316.24	43%	28,131.94
EXPENSE TOTALS	40,627.00	.00	40,627.00	2,552.26	.00	22,970.26	17,656.74	57%	.00
Fund **242 - LIVONIA BROWNFIELD - LSRRF** Totals	$42,373.00	$0.00	$42,373.00	($2,557.22)	$0.00	$12,713.50	$29,659.50		$28,131.94

BUDGET TO ACTUAL - COUNCIL SUMMARY - 8/31/2021

Through 08/31/21

Prior Fiscal Year Activity Included

Organization	Adopted Budget	Budget Amendments	Amended Budget	Current Month Transactions	YTD Encumbrances	YTD Transactions	Budget - YTD Transactions	% Used/ Rec'd	Prior Year YTD
Fund **243 - LIVONIA BROWNFIELD REDEV AUTH**									
REVENUE									
Department **000 - ACCOUNT BALANCES**	490,000.00	.00	490,000.00	.00	.00	169,055.39	320,944.61	35	129,879.99
REVENUE TOTALS	$490,000.00	$0.00	$490,000.00	$0.00	$0.00	$169,055.39	$320,944.61	35%	$129,879.99
EXPENSE									
Department **000 - ACCOUNT BALANCES**	490,000.00	.00	490,000.00	.00	.00	169,055.39	320,944.61	35	129,879.99
EXPENSE TOTALS	$490,000.00	$0.00	$490,000.00	$0.00	$0.00	$169,055.39	$320,944.61	35%	$129,879.99
Fund **243 - LIVONIA BROWNFIELD REDEV AUTH** Totals									
REVENUE TOTALS	490,000.00	.00	490,000.00	.00	.00	169,055.39	320,944.61	35%	129,879.99
EXPENSE TOTALS	490,000.00	.00	490,000.00	.00	.00	169,055.39	320,944.61	35%	129,879.99
Fund **243 - LIVONIA BROWNFIELD REDEV AUTH** Totals	$0.00	$0.00	$0.00	$0.00	$0.00	$0.00	$0.00		$0.00

BUDGET TO ACTUAL - COUNCIL SUMMARY - 8/31/2021

Through 08/31/21

Prior Fiscal Year Activity Included

Organization	Adopted Budget	Budget Amendments	Amended Budget	Current Month Transactions	YTD Encumbrances	YTD Transactions	Budget - YTD Transactions	% Used/ Rec'd	Prior Year YTD
Fund **244 - ECONOMIC DEVEL CORP**									
REVENUE									
Department **000 - ACCOUNT BALANCES**	300.00	.00	300.00	(.31)	.00	11.48	288.52	4	279.18
REVENUE TOTALS	$300.00	$0.00	$300.00	($0.31)	$0.00	$11.48	$288.52	4%	$279.18
EXPENSE									
Department **000 - ACCOUNT BALANCES**	.00	.00	.00	.00	.00	.00	.00	+++	107.65
EXPENSE TOTALS	$0.00	$0.00	$0.00	$0.00	$0.00	$0.00	$0.00	+++	$107.65
Fund **244 - ECONOMIC DEVEL CORP** Totals									
REVENUE TOTALS	300.00	.00	300.00	(.31)	.00	11.48	288.52	4%	279.18
EXPENSE TOTALS	.00	.00	.00	.00	.00	.00	.00	+++	107.65
Fund **244 - ECONOMIC DEVEL CORP** Totals	$300.00	$0.00	$300.00	($0.31)	$0.00	$11.48	$288.52		$171.53

BUDGET TO ACTUAL - COUNCIL SUMMARY - 8/31/2021

Through 08/31/21

Prior Fiscal Year Activity Included

Organization	Adopted Budget	Budget Amendments	Amended Budget	Current Month Transactions	YTD Encumbrances	YTD Transactions	Budget - YTD Transactions	% Used/ Rec'd	Prior Year YTD
Fund **248 - PLYMOUTH RD DEV AUTHORITY**									
REVENUE									
Department **000 - ACCOUNT BALANCES**	719,514.00	.00	719,514.00	(377.14)	.00	735,791.15	(16,277.15)	102	726,930.97
REVENUE TOTALS	$719,514.00	$0.00	$719,514.00	($377.14)	$0.00	$735,791.15	($16,277.15)	102%	$726,930.97
EXPENSE									
Department **000 - ACCOUNT BALANCES**	712,925.00	384,996.00	1,097,921.00	154,210.58	.00	359,965.92	737,955.08	33	(4,525.59)
EXPENSE TOTALS	$712,925.00	$384,996.00	$1,097,921.00	$154,210.58	$0.00	$359,965.92	$737,955.08	33%	($4,525.59)
Fund **248 - PLYMOUTH RD DEV AUTHORITY** Totals									
REVENUE TOTALS	719,514.00	.00	719,514.00	(377.14)	.00	735,791.15	(16,277.15)	102%	726,930.97
EXPENSE TOTALS	712,925.00	384,996.00	1,097,921.00	154,210.58	.00	359,965.92	737,955.08	33%	(4,525.59)
Fund **248 - PLYMOUTH RD DEV AUTHORITY** Totals	$6,589.00	($384,996.00)	($378,407.00)	($154,587.72)	$0.00	$375,825.23	($754,232.23)		$731,456.56

BUDGET TO ACTUAL - COUNCIL SUMMARY - 8/31/2021

Through 08/31/21

Prior Fiscal Year Activity Included

Organization	Adopted Budget	Budget Amendments	Amended Budget	Current Month Transactions	YTD Encumbrances	YTD Transactions	Budget - YTD Transactions	% Used/ Rec'd	Prior Year YTD
Fund **260 - MIDC GRANT**									
REVENUE									
Department **000 - ACCOUNT BALANCES**	648,952.00	.00	648,952.00	113,533.14	.00	590,060.92	58,891.08	91	411,027.35
REVENUE TOTALS	$648,952.00	$0.00	$648,952.00	$113,533.14	$0.00	$590,060.92	$58,891.08	91%	$411,027.35
EXPENSE									
Department **000 - ACCOUNT BALANCES**	648,952.00	.00	648,952.00	32,065.47	.00	218,582.23	430,369.77	34	254,002.81
EXPENSE TOTALS	$648,952.00	$0.00	$648,952.00	$32,065.47	$0.00	$218,582.23	$430,369.77	34%	$254,002.81
Fund **260 - MIDC GRANT** Totals									
REVENUE TOTALS	648,952.00	.00	648,952.00	113,533.14	.00	590,060.92	58,891.08	91%	411,027.35
EXPENSE TOTALS	648,952.00	.00	648,952.00	32,065.47	.00	218,582.23	430,369.77	34%	254,002.81
Fund **260 - MIDC GRANT** Totals	$0.00	$0.00	$0.00	$81,467.67	$0.00	$371,478.69	($371,478.69)		$157,024.54

BUDGET TO ACTUAL - COUNCIL SUMMARY - 8/31/2021

Through 08/31/21

Prior Fiscal Year Activity Included

Organization	Adopted Budget	Budget Amendments	Amended Budget	Current Month Transactions	YTD Encumbrances	YTD Transactions	Budget - YTD Transactions	% Used/ Rec'd	Prior Year YTD
Fund **261 - PUB. SAFETY COMMUNICATION**									
REVENUE									
Department **000 - ACCOUNT BALANCES**	545,000.00	.00	545,000.00	40,485.69	.00	283,486.76	261,513.24	52	286,093.34
REVENUE TOTALS	$545,000.00	$0.00	$545,000.00	$40,485.69	$0.00	$283,486.76	$261,513.24	52%	$286,093.34
EXPENSE									
Department **000 - ACCOUNT BALANCES**	1,366,500.00	136,603.00	1,503,103.00	40,718.53	211,355.06	328,487.93	963,260.01	36	127,571.47
EXPENSE TOTALS	$1,366,500.00	$136,603.00	$1,503,103.00	$40,718.53	$211,355.06	$328,487.93	$963,260.01	36%	$127,571.47
Fund **261 - PUB. SAFETY COMMUNICATION** Totals									
REVENUE TOTALS	545,000.00	.00	545,000.00	40,485.69	.00	283,486.76	261,513.24	52%	286,093.34
EXPENSE TOTALS	1,366,500.00	136,603.00	1,503,103.00	40,718.53	211,355.06	328,487.93	963,260.01	36%	127,571.47
Fund **261 - PUB. SAFETY COMMUNICATION** Totals	($821,500.00)	($136,603.00)	($958,103.00)	($232.84)	($211,355.06)	($45,001.17)	($701,746.77)		$158,521.87

BUDGET TO ACTUAL - COUNCIL SUMMARY - 8/31/2021

Through 08/31/21

Prior Fiscal Year Activity Included

Organization	Adopted Budget	Budget Amendments	Amended Budget	Current Month Transactions	YTD Encumbrances	YTD Transactions	Budget - YTD Transactions	% Used/ Rec'd	Prior Year YTD
Fund **262 - ADJUDICATED FORFEITURES**									
REVENUE									
Department **000 - ACCOUNT BALANCES**	225,000.00	.00	225,000.00	242.70	.00	214,083.40	10,916.60	95	169,192.95
REVENUE TOTALS	$225,000.00	$0.00	$225,000.00	$242.70	$0.00	$214,083.40	$10,916.60	95%	$169,192.95
EXPENSE									
Department **333 - STATE/LOCAL FORFEITURE EX**	516,350.00	.00	516,350.00	11,558.12	9,848.60	60,759.28	445,742.12	14	35,120.98
Department **334 - FEDERAL FORFEITURE EXP**	301,865.00	1,140.00	303,005.00	4,302.63	.00	74,940.08	228,064.92	25	61,436.22
Department **335 - CONTINUING CRIMINAL ENTERPRISE**	145,000.00	.00	145,000.00	2,028.91	.00	12,444.02	132,555.98	9	8,393.11
EXPENSE TOTALS	$963,215.00	$1,140.00	$964,355.00	$17,889.66	$9,848.60	$148,143.38	$806,363.02	16%	$104,950.31
Fund **262 - ADJUDICATED FORFEITURES** Totals									
REVENUE TOTALS	225,000.00	.00	225,000.00	242.70	.00	214,083.40	10,916.60	95%	169,192.95
EXPENSE TOTALS	963,215.00	1,140.00	964,355.00	17,889.66	9,848.60	148,143.38	806,363.02	16%	104,950.31
Fund **262 - ADJUDICATED FORFEITURES** Totals	($738,215.00)	($1,140.00)	($739,355.00)	($17,646.96)	($9,848.60)	$65,940.02	($795,446.42)		$64,242.64

BUDGET TO ACTUAL - COUNCIL SUMMARY - 8/31/2021

Through 08/31/21

Prior Fiscal Year Activity Included

Organization	Adopted Budget	Budget Amendments	Amended Budget	Current Month Transactions	YTD Encumbrances	YTD Transactions	Budget - YTD Transactions	% Used/ Rec'd	Prior Year YTD
Fund **270 - HISTORICAL COMMISSION**									
REVENUE									
Department **000 - ACCOUNT BALANCES**	115,200.00	1,787.00	116,987.00	14,047.60	.00	83,814.26	33,172.74	72	16,094.11
REVENUE TOTALS	$115,200.00	$1,787.00	$116,987.00	$14,047.60	$0.00	$83,814.26	$33,172.74	72%	$16,094.11
EXPENSE									
Department **000 - ACCOUNT BALANCES**	84,000.00	39,480.00	123,480.00	5,664.95	28,860.45	17,678.87	76,940.68	38	19,272.66
EXPENSE TOTALS	$84,000.00	$39,480.00	$123,480.00	$5,664.95	$28,860.45	$17,678.87	$76,940.68	38%	$19,272.66
Fund **270 - HISTORICAL COMMISSION** Totals									
REVENUE TOTALS	115,200.00	1,787.00	116,987.00	14,047.60	.00	83,814.26	33,172.74	72%	16,094.11
EXPENSE TOTALS	84,000.00	39,480.00	123,480.00	5,664.95	28,860.45	17,678.87	76,940.68	38%	19,272.66
Fund **270 - HISTORICAL COMMISSION** Totals	$31,200.00	($37,693.00)	($6,493.00)	$8,382.65	($28,860.45)	$66,135.39	($43,767.94)		($3,178.55)

BUDGET TO ACTUAL - COUNCIL SUMMARY - 8/31/2021

Through 08/31/21

Prior Fiscal Year Activity Included

Organization	Adopted Budget	Budget Amendments	Amended Budget	Current Month Transactions	YTD Encumbrances	YTD Transactions	Budget - YTD Transactions	% Used/ Rec'd	Prior Year YTD
Fund **271 - LIBRARY FUND**									
REVENUE									
Department **000 - ACCOUNT BALANCES**	4,129,019.00	.00	4,129,019.00	3,144.00	.00	4,050,366.80	78,652.20	98	3,961,948.02
REVENUE TOTALS	$4,129,019.00	$0.00	$4,129,019.00	$3,144.00	$0.00	$4,050,366.80	$78,652.20	98%	$3,961,948.02
EXPENSE									
Department **778 - CIVIC CENTER LIBRARY**	3,381,149.00	183,500.00	3,564,649.00	226,558.93	61,655.11	2,049,766.17	1,453,227.72	59	1,676,165.22
Department **779 - NOBLE LIBRARY**	.00	20,000.00	20,000.00	92.81	.00	8,531.78	11,468.22	43	84,846.73
Department **780 - SANDBURG LIBRARY**	749,504.00	16,391.00	765,895.00	56,353.45	2,635.00	498,809.01	264,450.99	65	376,664.70
EXPENSE TOTALS	$4,130,653.00	$219,891.00	$4,350,544.00	$283,005.19	$64,290.11	$2,557,106.96	$1,729,146.93	60%	$2,137,676.65
Fund **271 - LIBRARY FUND** Totals									
REVENUE TOTALS	4,129,019.00	.00	4,129,019.00	3,144.00	.00	4,050,366.80	78,652.20	98%	3,961,948.02
EXPENSE TOTALS	4,130,653.00	219,891.00	4,350,544.00	283,005.19	64,290.11	2,557,106.96	1,729,146.93	60%	2,137,676.65
Fund **271 - LIBRARY FUND** Totals	($1,634.00)	($219,891.00)	($221,525.00)	($279,861.19)	($64,290.11)	$1,493,259.84	($1,650,494.73)		$1,824,271.37

BUDGET TO ACTUAL - COUNCIL SUMMARY - 8/31/2021

Through 08/31/21

Prior Fiscal Year Activity Included

Organization	Adopted Budget	Budget Amendments	Amended Budget	Current Month Transactions	YTD Encumbrances	YTD Transactions	Budget - YTD Transactions	% Used/ Rec'd	Prior Year YTD
Fund **272 - ARTS COMMISSION FUND**									
REVENUE									
Department **000 - ACCOUNT BALANCES**	17,000.00	.00	17,000.00	2,643.45	.00	11,576.24	5,423.76	68	1,384.37
REVENUE TOTALS	$17,000.00	$0.00	$17,000.00	$2,643.45	$0.00	$11,576.24	$5,423.76	68%	$1,384.37
EXPENSE									
Department **000 - ACCOUNT BALANCES**	13,000.00	.00	13,000.00	6,199.60	.00	6,199.60	6,800.40	48	212.50
EXPENSE TOTALS	$13,000.00	$0.00	$13,000.00	$6,199.60	$0.00	$6,199.60	$6,800.40	48%	$212.50
Fund **272 - ARTS COMMISSION FUND** Totals									
REVENUE TOTALS	17,000.00	.00	17,000.00	2,643.45	.00	11,576.24	5,423.76	68%	1,384.37
EXPENSE TOTALS	13,000.00	.00	13,000.00	6,199.60	.00	6,199.60	6,800.40	48%	212.50
Fund **272 - ARTS COMMISSION FUND** Totals	$4,000.00	$0.00	$4,000.00	($3,556.15)	$0.00	$5,376.64	($1,376.64)		$1,171.87

BUDGET TO ACTUAL - COUNCIL SUMMARY - 8/31/2021

Through 08/31/21

Prior Fiscal Year Activity Included

Organization	Adopted Budget	Budget Amendments	Amended Budget	Current Month Transactions	YTD Encumbrances	YTD Transactions	Budget - YTD Transactions	% Used/ Rec'd	Prior Year YTD
Fund **286 - TRANSIT & CAPITAL IMPR**									
REVENUE									
Department **000 - ACCOUNT BALANCES**	2,407,245.00	.00	2,407,245.00	(.31)	.00	2,432,622.95	(25,377.95)	101	2,340,780.76
REVENUE TOTALS	$2,407,245.00	$0.00	$2,407,245.00	($0.31)	$0.00	$2,432,622.95	($25,377.95)	101%	$2,340,780.76
EXPENSE									
Department **000 - ACCOUNT BALANCES**	2,407,245.00	.00	2,407,245.00	.00	.00	2,407,245.00	.00	100	2,308,717.00
EXPENSE TOTALS	$2,407,245.00	$0.00	$2,407,245.00	$0.00	$0.00	$2,407,245.00	$0.00	100%	$2,308,717.00
Fund **286 - TRANSIT & CAPITAL IMPR** Totals									
REVENUE TOTALS	2,407,245.00	.00	2,407,245.00	(.31)	.00	2,432,622.95	(25,377.95)	101%	2,340,780.76
EXPENSE TOTALS	2,407,245.00	.00	2,407,245.00	.00	.00	2,407,245.00	.00	100%	2,308,717.00
Fund **286 - TRANSIT & CAPITAL IMPR** Totals	$0.00	$0.00	$0.00	($0.31)	$0.00	$25,377.95	($25,377.95)		$32,063.76

BUDGET TO ACTUAL - COUNCIL SUMMARY - 8/31/2021

Through 08/31/21

Prior Fiscal Year Activity Included

Organization	Adopted Budget	Budget Amendments	Amended Budget	Current Month Transactions	YTD Encumbrances	YTD Transactions	Budget - YTD Transactions	% Used/ Rec'd	Prior Year YTD
Fund **288 - COMMUNITY TRANSIT PROGRAM**									
REVENUE									
Department **000 - ACCOUNT BALANCES**	994,828.00	.00	994,828.00	2,702.81	.00	940,582.42	54,245.58	95	946,263.62
REVENUE TOTALS	$994,828.00	$0.00	$994,828.00	$2,702.81	$0.00	$940,582.42	$54,245.58	95%	$946,263.62
EXPENSE									
Department **606 - COMM TRANSIT DISPATCHERS**	101,050.00	.00	101,050.00	6,791.57	.00	63,153.72	37,896.28	62	58,147.17
Department **607 - COMMUNITY TRANSIT ADMIN**	130,486.00	.00	130,486.00	9,816.65	.00	91,004.53	39,481.47	70	115,657.40
Department **608 - COMMUNITY TRANSIT**	907,863.00	.00	907,863.00	28,141.60	79,852.50	307,320.99	520,689.51	43	313,723.44
EXPENSE TOTALS	$1,139,399.00	$0.00	$1,139,399.00	$44,749.82	$79,852.50	$461,479.24	$598,067.26	48%	$487,528.01
Fund **288 - COMMUNITY TRANSIT PROGRAM** Totals									
REVENUE TOTALS	994,828.00	.00	994,828.00	2,702.81	.00	940,582.42	54,245.58	95%	946,263.62
EXPENSE TOTALS	1,139,399.00	.00	1,139,399.00	44,749.82	79,852.50	461,479.24	598,067.26	48%	487,528.01
Fund **288 - COMMUNITY TRANSIT PROGRAM** Totals	($144,571.00)	$0.00	($144,571.00)	($42,047.01)	($79,852.50)	$479,103.18	($543,821.68)		$458,735.61

BUDGET TO ACTUAL - COUNCIL SUMMARY - 8/31/2021

Through 08/31/21

Prior Fiscal Year Activity Included

Organization	Adopted Budget	Budget Amendments	Amended Budget	Current Month Transactions	YTD Encumbrances	YTD Transactions	Budget - YTD Transactions	% Used/ Rec'd	Prior Year YTD
Fund **297 - CABLE TELEVISION FUND**									
REVENUE									
Department **000 - ACCOUNT BALANCES**	421,100.00	.00	421,100.00	69,366.27	.00	288,712.23	132,387.77	69	312,139.16
REVENUE TOTALS	$421,100.00	$0.00	$421,100.00	$69,366.27	$0.00	$288,712.23	$132,387.77	69%	$312,139.16
EXPENSE									
Department **806 - CABLE TELEVISION**	507,616.00	.00	507,616.00	32,345.11	7,570.00	314,583.19	185,462.81	63	260,552.08
EXPENSE TOTALS	$507,616.00	$0.00	$507,616.00	$32,345.11	$7,570.00	$314,583.19	$185,462.81	63%	$260,552.08
Fund **297 - CABLE TELEVISION FUND** Totals									
REVENUE TOTALS	421,100.00	.00	421,100.00	69,366.27	.00	288,712.23	132,387.77	69%	312,139.16
EXPENSE TOTALS	507,616.00	.00	507,616.00	32,345.11	7,570.00	314,583.19	185,462.81	63%	260,552.08
Fund **297 - CABLE TELEVISION FUND** Totals	($86,516.00)	$0.00	($86,516.00)	$37,021.16	($7,570.00)	($25,870.96)	($53,075.04)		$51,587.08

BUDGET TO ACTUAL - COUNCIL SUMMARY - 8/31/2021

Through 08/31/21

Prior Fiscal Year Activity Included

Organization	Adopted Budget	Budget Amendments	Amended Budget	Current Month Transactions	YTD Encumbrances	YTD Transactions	Budget - YTD Transactions	% Used/ Rec'd	Prior Year YTD
Fund **372 - D/S 2015 MBA REFUNDING**									
REVENUE									
Department **000 - ACCOUNT BALANCES**	184,457.00	.00	184,457.00	500.00	.00	175,997.50	8,459.50	95	172,473.50
REVENUE TOTALS	$184,457.00	$0.00	$184,457.00	$500.00	$0.00	$175,997.50	$8,459.50	95%	$172,473.50
EXPENSE									
Department **000 - ACCOUNT BALANCES**	184,457.00	.00	184,457.00	500.00	.00	175,997.50	8,459.50	95	172,473.50
EXPENSE TOTALS	$184,457.00	$0.00	$184,457.00	$500.00	$0.00	$175,997.50	$8,459.50	95%	$172,473.50
Fund **372 - D/S 2015 MBA REFUNDING** Totals									
REVENUE TOTALS	184,457.00	.00	184,457.00	500.00	.00	175,997.50	8,459.50	95%	172,473.50
EXPENSE TOTALS	184,457.00	.00	184,457.00	500.00	.00	175,997.50	8,459.50	95%	172,473.50
Fund **372 - D/S 2015 MBA REFUNDING** Totals	$0.00	$0.00	$0.00	$0.00	$0.00	$0.00	$0.00		$0.00

BUDGET TO ACTUAL - COUNCIL SUMMARY - 8/31/2021

Through 08/31/21

Prior Fiscal Year Activity Included

Organization	Adopted Budget	Budget Amendments	Amended Budget	Current Month Transactions	YTD Encumbrances	YTD Transactions	Budget - YTD Transactions	% Used/ Rec'd	Prior Year YTD
Fund **373 - D/S 2016 MBA REFUNDING**									
REVENUE									
Department **000 - ACCOUNT BALANCES**	551,000.00	.00	551,000.00	.00	.00	446,600.00	104,400.00	81	438,000.00
REVENUE TOTALS	$551,000.00	$0.00	$551,000.00	$0.00	$0.00	$446,600.00	$104,400.00	81%	$438,000.00
EXPENSE									
Department **000 - ACCOUNT BALANCES**	551,000.00	.00	551,000.00	.00	.00	446,600.00	104,400.00	81	438,000.00
EXPENSE TOTALS	$551,000.00	$0.00	$551,000.00	$0.00	$0.00	$446,600.00	$104,400.00	81%	$438,000.00
Fund **373 - D/S 2016 MBA REFUNDING** Totals									
REVENUE TOTALS	551,000.00	.00	551,000.00	.00	.00	446,600.00	104,400.00	81%	438,000.00
EXPENSE TOTALS	551,000.00	.00	551,000.00	.00	.00	446,600.00	104,400.00	81%	438,000.00
Fund **373 - D/S 2016 MBA REFUNDING** Totals	$0.00	$0.00	$0.00	$0.00	$0.00	$0.00	$0.00		$0.00

BUDGET TO ACTUAL - COUNCIL SUMMARY - 8/31/2021

Through 08/31/21

Prior Fiscal Year Activity Included

Organization	Adopted Budget	Budget Amendments	Amended Budget	Current Month Transactions	YTD Encumbrances	YTD Transactions	Budget - YTD Transactions	% Used/ Rec'd	Prior Year YTD
Fund **374 - D/S 2017 MBA REFUNDING**									
REVENUE									
Department **000 - ACCOUNT BALANCES**	1,993,850.00	.00	1,993,850.00	.00	.00	1,692,450.00	301,400.00	85	1,672,400.00
REVENUE TOTALS	$1,993,850.00	$0.00	$1,993,850.00	$0.00	$0.00	$1,692,450.00	$301,400.00	85%	$1,672,400.00
EXPENSE									
Department **000 - ACCOUNT BALANCES**	1,993,850.00	.00	1,993,850.00	.00	.00	1,692,450.00	301,400.00	85	1,672,400.00
EXPENSE TOTALS	$1,993,850.00	$0.00	$1,993,850.00	$0.00	$0.00	$1,692,450.00	$301,400.00	85%	$1,672,400.00
Fund **374 - D/S 2017 MBA REFUNDING** Totals									
REVENUE TOTALS	1,993,850.00	.00	1,993,850.00	.00	.00	1,692,450.00	301,400.00	85%	1,672,400.00
EXPENSE TOTALS	1,993,850.00	.00	1,993,850.00	.00	.00	1,692,450.00	301,400.00	85%	1,672,400.00
Fund **374 - D/S 2017 MBA REFUNDING** Totals	$0.00	$0.00	$0.00	$0.00	$0.00	$0.00	$0.00		$0.00

BUDGET TO ACTUAL - COUNCIL SUMMARY - 8/31/2021

Through 08/31/21

Prior Fiscal Year Activity Included

Organization	Adopted Budget	Budget Amendments	Amended Budget	Current Month Transactions	YTD Encumbrances	YTD Transactions	Budget - YTD Transactions	% Used/ Rec'd	Prior Year YTD
Fund **401 - CAPITAL PROJECTS**									
REVENUE									
Department **000 - ACCOUNT BALANCES**	2,182,245.00	.00	2,182,245.00	(154.69)	.00	2,136,324.07	45,920.93	98	2,625,844.98
REVENUE TOTALS	$2,182,245.00	$0.00	$2,182,245.00	($154.69)	$0.00	$2,136,324.07	$45,920.93	98%	$2,625,844.98
EXPENSE									
Department **000 - ACCOUNT BALANCES**	2,501,450.00	4,654,895.00	7,156,345.00	9,821.20	794,634.30	940,730.52	5,420,980.18	24	2,162,327.74
EXPENSE TOTALS	$2,501,450.00	$4,654,895.00	$7,156,345.00	$9,821.20	$794,634.30	$940,730.52	$5,420,980.18	24%	$2,162,327.74
Fund **401 - CAPITAL PROJECTS** Totals									
REVENUE TOTALS	2,182,245.00	.00	2,182,245.00	(154.69)	.00	2,136,324.07	45,920.93	98%	2,625,844.98
EXPENSE TOTALS	2,501,450.00	4,654,895.00	7,156,345.00	9,821.20	794,634.30	940,730.52	5,420,980.18	24%	2,162,327.74
Fund **401 - CAPITAL PROJECTS** Totals	($319,205.00)	($4,654,895.00)	($4,974,100.00)	($9,975.89)	($794,634.30)	$1,195,593.55	($5,375,059.25)		$463,517.24

BUDGET TO ACTUAL - COUNCIL SUMMARY - 8/31/2021

Through 08/31/21

Prior Fiscal Year Activity Included

Organization	Adopted Budget	Budget Amendments	Amended Budget	Current Month Transactions	YTD Encumbrances	YTD Transactions	Budget - YTD Transactions	% Used/ Rec'd	Prior Year YTD
Fund **418 - BUILDING IMPROVEMENT FUND**									
REVENUE									
Department **000 - ACCOUNT BALANCES**	5,000.00	.00	5,000.00	(57.97)	.00	1,518.82	3,481.18	30	14,211.32
REVENUE TOTALS	$5,000.00	$0.00	$5,000.00	($57.97)	$0.00	$1,518.82	$3,481.18	30%	$14,211.32
EXPENSE									
Department **000 - ACCOUNT BALANCES**	100,000.00	.00	100,000.00	5,951.93	.00	5,951.93	94,048.07	6	.00
EXPENSE TOTALS	$100,000.00	$0.00	$100,000.00	$5,951.93	$0.00	$5,951.93	$94,048.07	6%	$0.00
Fund **418 - BUILDING IMPROVEMENT FUND** Totals									
REVENUE TOTALS	5,000.00	.00	5,000.00	(57.97)	.00	1,518.82	3,481.18	30%	14,211.32
EXPENSE TOTALS	100,000.00	.00	100,000.00	5,951.93	.00	5,951.93	94,048.07	6%	.00
Fund **418 - BUILDING IMPROVEMENT FUND** Totals	($95,000.00)	$0.00	($95,000.00)	($6,009.90)	$0.00	($4,433.11)	($90,566.89)		$14,211.32

BUDGET TO ACTUAL - COUNCIL SUMMARY - 8/31/2021

Through 08/31/21

Prior Fiscal Year Activity Included

Organization	Adopted Budget	Budget Amendments	Amended Budget	Current Month Transactions	YTD Encumbrances	YTD Transactions	Budget - YTD Transactions	% Used/ Rec'd	Prior Year YTD
Fund **536 - NEWBURGH VILLAGE**									
REVENUE									
Department **000 - ACCOUNT BALANCES**	838,400.00	.00	838,400.00	71,798.85	.00	623,009.15	215,390.85	74	610,393.09
REVENUE TOTALS	$838,400.00	$0.00	$838,400.00	$71,798.85	$0.00	$623,009.15	$215,390.85	74%	$610,393.09
EXPENSE									
Department **677 - NEWBURGH VILLAGE**	728,084.00	.00	728,084.00	40,181.90	2,942.50	441,690.73	283,450.77	61	384,786.82
EXPENSE TOTALS	$728,084.00	$0.00	$728,084.00	$40,181.90	$2,942.50	$441,690.73	$283,450.77	61%	$384,786.82
Fund **536 - NEWBURGH VILLAGE** Totals									
REVENUE TOTALS	838,400.00	.00	838,400.00	71,798.85	.00	623,009.15	215,390.85	74%	610,393.09
EXPENSE TOTALS	728,084.00	.00	728,084.00	40,181.90	2,942.50	441,690.73	283,450.77	61%	384,786.82
Fund **536 - NEWBURGH VILLAGE** Totals	$110,316.00	$0.00	$110,316.00	$31,616.95	($2,942.50)	$181,318.42	($68,059.92)		$225,606.27

BUDGET TO ACTUAL - COUNCIL SUMMARY - 8/31/2021

Through 08/31/21

Prior Fiscal Year Activity Included

Organization	Adopted Budget	Budget Amendments	Amended Budget	Current Month Transactions	YTD Encumbrances	YTD Transactions	Budget - YTD Transactions	% Used/ Rec'd	Prior Year YTD
Fund **538 - SILVER VILLAGE FUND**									
REVENUE									
Department **000 - ACCOUNT BALANCES**	674,210.00	.00	674,210.00	54,796.54	.00	493,161.49	181,048.51	73	503,699.76
REVENUE TOTALS	$674,210.00	$0.00	$674,210.00	$54,796.54	$0.00	$493,161.49	$181,048.51	73%	$503,699.76
EXPENSE									
Department **676 - SILVER VILLAGE**	586,164.00	.00	586,164.00	52,544.59	.00	322,937.82	263,226.18	55	327,401.37
EXPENSE TOTALS	$586,164.00	$0.00	$586,164.00	$52,544.59	$0.00	$322,937.82	$263,226.18	55%	$327,401.37
Fund **538 - SILVER VILLAGE FUND** Totals									
REVENUE TOTALS	674,210.00	.00	674,210.00	54,796.54	.00	493,161.49	181,048.51	73%	503,699.76
EXPENSE TOTALS	586,164.00	.00	586,164.00	52,544.59	.00	322,937.82	263,226.18	55%	327,401.37
Fund **538 - SILVER VILLAGE FUND** Totals	$88,046.00	$0.00	$88,046.00	$2,251.95	$0.00	$170,223.67	($82,177.67)		$176,298.39

BUDGET TO ACTUAL - COUNCIL SUMMARY - 8/31/2021

Through 08/31/21

Prior Fiscal Year Activity Included

Organization	Adopted Budget	Budget Amendments	Amended Budget	Current Month Transactions	YTD Encumbrances	YTD Transactions	Budget - YTD Transactions	% Used/ Rec'd	Prior Year YTD
Fund **584 - GOLF COURSE FUND**									
REVENUE									
Department **000 - ACCOUNT BALANCES**	2,055,363.00	.00	2,055,363.00	365,080.04	.00	1,774,031.69	281,331.31	86	1,460,809.38
REVENUE TOTALS	$2,055,363.00	$0.00	$2,055,363.00	$365,080.04	$0.00	$1,774,031.69	$281,331.31	86%	$1,460,809.38
EXPENSE									
Department **000 - ACCOUNT BALANCES**	.00	.00	.00	.00	.00	.00	.00	+++	.00
Department **773 - WHISPERING WILLOWS**	712,974.00	2,904.00	715,878.00	75,504.91	.00	480,202.16	235,675.84	67	456,427.52
Department **774 - IDYL WYLD**	533,974.00	(2,096.00)	531,878.00	59,822.36	1,894.45	380,957.73	149,025.82	72	315,439.38
Department **775 - FOX CREEK**	779,372.00	3,404.00	782,776.00	63,738.25	1,894.45	460,736.00	320,145.55	59	401,548.38
EXPENSE TOTALS	$2,026,320.00	$4,212.00	$2,030,532.00	$199,065.52	$3,788.90	$1,321,895.89	$704,847.21	65%	$1,173,415.28
Fund **584 - GOLF COURSE FUND** Totals									
REVENUE TOTALS	2,055,363.00	.00	2,055,363.00	365,080.04	.00	1,774,031.69	281,331.31	86%	1,460,809.38
EXPENSE TOTALS	2,026,320.00	4,212.00	2,030,532.00	199,065.52	3,788.90	1,321,895.89	704,847.21	65%	1,173,415.28
Fund **584 - GOLF COURSE FUND** Totals	$29,043.00	($4,212.00)	$24,831.00	$166,014.52	($3,788.90)	$452,135.80	($423,515.90)		$287,394.10

BUDGET TO ACTUAL - COUNCIL SUMMARY - 8/31/2021

Through 08/31/21

Prior Fiscal Year Activity Included

Organization	Adopted Budget	Budget Amendments	Amended Budget	Current Month Transactions	YTD Encumbrances	YTD Transactions	Budget - YTD Transactions	% Used/ Rec'd	Prior Year YTD
Fund **592 - WATER AND SEWER FUND**									
REVENUE									
Department **000 - ACCOUNT BALANCES**	43,652,866.00	.00	43,652,866.00	3,813,509.42	.00	29,756,801.94	13,896,064.06	68	31,728,299.80
REVENUE TOTALS	$43,652,866.00	$0.00	$43,652,866.00	$3,813,509.42	$0.00	$29,756,801.94	$13,896,064.06	68%	$31,728,299.80
EXPENSE									
Department **558 - W & S FINANCIAL ADMIN**	35,034,916.00	3,506.00	35,038,422.00	2,946,359.59	.00	25,493,697.91	9,544,724.09	73	25,352,419.88
Department **559 - W & S FIELD OPERATIONS**	7,087,611.00	150,000.00	7,237,611.00	440,460.22	22,023.15	4,723,913.15	2,491,674.70	66	4,031,283.40
EXPENSE TOTALS	$42,122,527.00	$153,506.00	$42,276,033.00	$3,386,819.81	$22,023.15	$30,217,611.06	$12,036,398.79	72%	$29,383,703.28
Fund **592 - WATER AND SEWER FUND** Totals									
REVENUE TOTALS	43,652,866.00	.00	43,652,866.00	3,813,509.42	.00	29,756,801.94	13,896,064.06	68%	31,728,299.80
EXPENSE TOTALS	42,122,527.00	153,506.00	42,276,033.00	3,386,819.81	22,023.15	30,217,611.06	12,036,398.79	72%	29,383,703.28
Fund **592 - WATER AND SEWER FUND** Totals	$1,530,339.00	($153,506.00)	$1,376,833.00	$426,689.61	($22,023.15)	($460,809.12)	$1,859,665.27		$2,344,596.52
Grand Totals									
REVENUE TOTALS	176,496,643.00	24,537.00	176,521,180.00	10,318,556.06	.00	145,744,334.35	30,776,845.65	83%	139,890,549.89
EXPENSE TOTALS	180,426,251.00	8,757,672.00	189,183,923.00	13,561,941.73	2,636,985.97	117,119,107.74	69,427,829.29	63%	111,506,844.61
Grand Totals	($3,929,608.00)	($8,733,135.00)	($12,662,743.00)	($3,243,385.67)	($2,636,985.97)	$28,625,226.61	($38,650,983.64)		$28,383,705.28

CITY OF LIVONIA – CITY COUNCIL
MINUTES OF STUDY MEETING HELD OCTOBER 18, 2021

Meeting was called to order in the Auditorium of City Hall, 33000 Civic Center Drive, at 8:35 p.m. by President Kathleen McIntyre. Present: Jim Jolly, Laura Toy, Scott Bahr, Cathy White, Brandon McCullough, Rob Donovic, and President Kathleen McIntyre. Absent: None.

2. REAPPOINTMENT OF KEN HARB TO THE LIVONIA BROWNFIELD REDEVELOPMENT AUTHORITY: Office of the Mayor, re: for a term which will expire on November 24, 2024.

LaShawn Thomas, Director of Governmental Affairs, presented this request to Council. She stated it is her pleasure to request the reappointment of Ken Harb to the Livonia Brownfield Redevelopment Authority. Ken Harb is no stranger to the Livonia community. A resident for 30-plus years, he has served as past member of the Livonia Human Relations Commission and the Livonia Zoning Board of Appeals. He is also a former board member of both the Michigan State Police Retirement Board and Basilica of St. Mary's. Ken's professional career with Wells Fargo Advisors spans three decades. He holds a bachelor's degree from the University of Michigan Dearborn in business, economics and finance. He has been married to his wife Cathy for thirty-three years and I believe that Ken would like to say something.

Ken Harb came to the podium and stated it's really overwhelming and if he had to say anything, he'd like to thank the Mayor, Mayor Brosnan, for the reappointment and I appreciate the Council's consideration to serve the City.

Councilmember Toy stated since he went to the University of Michigan, she would ask for his reappointment and concur with the Administration.

Councilmember Donovic stated I'm happy to see you're being reappointed, you've been a very active member of our society and community, and it's good to know that good folks like you are helping out and doing good things in the community, so thank you.

DIRECTION: APPROVING CONSENT

LETTER TO THE LIVONIA CITY COUNCIL

Mayor's Office
October 19, 2021

MEETING DATE	PREPARED BY
October 18, 2021	Janice Centers, Executive Assistant to the Mayor - Program Supervisor,

AGENDA ITEM

REAPPOINTMENT OF KEN HARB TO THE LIVONIA BROWNFIELD REDEVELOPMENT AUTHORITY: Office of the Mayor, re: for a term which will expire on November 24, 2024.

BACKGROUND

16788 Westbrook Livonia

RECOMMENDATION

To reappoint Ken Harb to the Livonia Brownfield Redevelopment Authority.

FISCAL CONSIDERATION

N/A

ATTACHMENTS

None

APPROVED BY

Maureen Miller Brosnan

Date: October 07, 2021

Maureen Miller Brosnan, Mayor

CITY OF LIVONIA – CITY COUNCIL
MINUTES OF STUDY MEETING HELD OCTOBER 18, 2021

Meeting was called to order in the Auditorium of City Hall, 33000 Civic Center Drive, at 8:35 p.m. by President Kathleen McIntyre. Present: Jim Jolly, Laura Toy, Scott Bahr, Cathy White, Brandon McCullough, Rob Donovic, and President Kathleen McIntyre. Absent: None.

3. REAPPOINTMENT OF DILLON BREEN TO THE LIVONIA BROWNFIELD REDEVELOPMENT AUTHORITY: Office of the Mayor, re: for a term which will expire on November 24, 2024.

LaShawn Thomas, Director of Governmental Affairs, presented this request to Council. She stated it is again her pleasure to request the reappointment of Dillon Breen to the Livonia Brownfield Redevelopment Authority. Dillon Breen has been a member of the Brownfield Redevelopment Authority since 2019. He has previously served on the Human Relations Commission and the Local Officers Compensation Commission. Dillon earned his bachelor's degree of science in geology from Calvin College with a minor in geography. Additionally he holds an Environmental Analyst Certificate and a land resources Analyst Certificate from the Au Sable Institute of Environmental Studies. He also holds an associate in arts from Schoolcraft College where he currently serves as a member of the College's Board of Trustees. Dillon is an active member in the Southeast Michigan Council of Government, SEMCOG, where he serves as a member of the Executive Committee, Regional Review Committee, and as a General Assembly Delegate. He's also a member of the Wayne County Apportionment Commission.

Dillon Breen came to the podium and stated I appreciate the opportunity to be able to serve again and I appreciate the confidence of Mayor Brosnan for nominating me for reappointment.

Vice President Bahr offered an approving resolution for the Consent Agenda.

Councilmember Donovic congratulated Breen on the great job and is looking forward to his continued service to the community and thanks for continuing to serve.

Councilmember Jolly stated it's not often we get a Schoolcraft Board of Trustee member here so I feel I cannot leave the opportunity, although this is your moment here to bring up the bumper sticker on the side of the soccer dome. Just wanted to let you know that is something on my radar and I'd appreciate it if in your position at Schoolcraft, to look into it.

Breen thanked Jolly and stated I'll make sure that I bring that up to the other Trustees, it has been discussed and just so you know, something is in the works.

Councilmember Toy commented that Dillon has been a true asset to our community and you were one of the younger ones and now Rob, of course, is trying to steal your life, I'm only joking. But in all seriousness, Dillon has done some fabulous things and we are so glad you came back from college and decided to stay here and we can use your intellect and your learned experiences, we appreciate it so much.

DIRECTION: APPROVING CONSENT

LETTER TO THE LIVONIA CITY COUNCIL

2.

Mayor's Office
October 19, 2021

MEETING DATE	PREPARED BY
October 18, 2021	Janice Centers, Executive Assistant to the Mayor - Program Supervisor,

AGENDA ITEM

REAPPOINTMENT OF DILLON BREEN TO THE LIVONIA BROWNFIELD REDEVELOPMENT AUTHORITY: Office of the Mayor, re: for a term which will expire on November 24, 2024.

BACKGROUND

38987 Stacey

RECOMMENDATION

To reappoint Dillon Breen to the Livonia Brownfield Redevelopment Authority.

FISCAL CONSIDERATION

N/A

ATTACHMENTS

None

APPROVED BY

Maureen Miller Brosnan

Date: October 07, 2021

Maureen Miller Brosnan, Mayor

CITY OF LIVONIA – CITY COUNCIL
MINUTES OF STUDY MEETING HELD OCTOBER 18, 2021

Meeting was called to order in the Auditorium of City Hall, 33000 Civic Center Drive, at 8:35 p.m. by President Kathleen McIntyre. Present: Jim Jolly, Laura Toy, Scott Bahr, Cathy White, Brandon McCullough, Rob Donovic, and President Kathleen McIntyre. Absent: None.

4. REQUEST TO EXTEND CONTRACT WITH HAVENER TECH, INC.: Department of Public Works, re: for as-needed repairs for the catch basin, storm sewer and concrete slab stabilization program, in an amount not to exceed $50,000 annually for two years, from budgeted funds. (CR 290-18)

Jacob Rushlow, Assistant Director of Public Works, presented this request to Council. He stated in July 2018 Council approved a contract between the City of Livonia and Havener Tech for the as-needed catch basins, storm sewer and concrete slab stabilization repair program. At that time a two-year contract was approved with the option for an additional two years. Havener Tech has agreed to a two-year extension with no increase in their current pricing. The Department of Public Works has worked with this company over the last two years on the repair of around 100 catch basins, using their quick trenchless technology for rehabilitating those structures and we've also been very impressed with their capabilities to perform these services on catch basins as well as on large culverts and concrete slab stabilization that we had them do on another project. Funding for this project is budgeted within the Road Maintenance Fund and will greatly improve our ability to quickly stabilize failing catch basins and storm sewers while saving money for the City through this program. With that, the DPW is requesting a not-to-exceed amount of $50,000.00 per year to make the necessary repairs in infrastructure system improvement.

Councilmember Jolly said you mentioned that it was a two-year contract with a two-year renewal and Rushlow replied correct. Jolly asked if the contract automatically renewed for the second two years without coming to Council and Rushlow replied it did not. It was approved in 2018 through the process of getting contractual documentation signed and approved, we didn't actually start work with them until 2019 when the agreement was – the contract was signed. So, the first year we did work with them was in 2019, so we worked with then for two years, '19 and '20; here in '21, we're looking for their renewal to continue through what's left with this year, which in talking with the owner of the company he can still come in and do repairs for us this year on our list that we prepare every year for those fifty catch basins that we have planned and then he'll do another fifty catch basin repairs for us next year as well.

Jolly asked so we're talking about the second two years here and Rushlow replied we're in the second two years right now, '21 and '22 would be the two

years. Jolly confirmed that's what's coming before us now and Rushlow replied correct. Jolly then asked should this have before us earlier or not, I'm just trying to understand the years here. Rushlow replied it definitely could have, my fault or not in bringing it to you sooner, but it was up for renewal this year. With everything else that we had going on, this one kind of fell to the back burner of really nice program technique where we can quickly rehab structures. We are preparing a list throughout the year and then came to the realization that well, we need to get approval before we can do this year's program through an extension, we need to do that right now so we can do that before the weather changes which is why we're here in front of you late.

Jolly offered an approving resolution for the Consent Agenda. He then asked if we had pad them on the second two years and Rushlow replied we have not paid them on the second two years yet.

DIRECTION: APPROVING CONSENT

LETTER TO THE LIVONIA CITY COUNCIL

4.

DPW
September 30, 2021

MEETING DATE	PREPARED BY
October 18, 2021	Jill Russell, Secretary III,

AGENDA ITEM

REQUEST TO EXTEND CONTRACT WITH HAVENER TECH, INC.: Department of Public Works, re: for as-needed repairs for the catch basin, storm sewer and concrete slab stabilization program, in an amount not to exceed $50,000 annually for two years, from budgeted funds. (CR 290-18)

BACKGROUND

The Department of Public Works is always looking for progressive, less intrusive, and safer ways of performing preventative maintenance on buried infrastructure. The catch basin, storm sewer, and concrete slab stabilization services technique provides another tool that can be used by Department staff to make repairs to our aging infrastructure. The City is responsible for the repair and maintenance of over 10,000 catch basins and other storm water structures. As leaks occur in these structures and along storm pipes, this tool will allow, in some cases, the injection of a polyurethane foam to fill the voids and seal the leaking structures, thus eliminating the costly and disruptive process of excavating, rebuilding/replacing, repaving, and turf restoration. This quick, trenchless, and non-disruptive repair technique is being utilized by neighboring cities, townships, county road commissions, and the Michigan Department of Transportation.

In July 2018 Council approved a contract between the City of Livonia and Havener Tech, Inc. for as-needed catch basin, storm sewer, and concrete slab stabilization services (CR #290-18). At that time a two (2) year contract was approved, with the option to extend for an additional two (2) years. Havener Tech has agreed to a two (2) year extension with no increase in pricing. The Department of Public Works has worked with Havener Tech over the past two years on the repair of 100 road catch basins using their quick, trenchless technology. We've also been impressed with their capabilities of services to perform large storm culvert and concrete slab stabilization.

The funding for this contract is budgeted within the road maintenance fund and will improve our ability to quickly stabilize failing catch basins and storm sewers while saving money for the City of Livonia. The Department of Public Works is requesting a not to exceed amount of $50,000.00 per year to make the necessary repairs and infrastructure system improvements.

RECOMMENDATION

It is the recommendation of the Department of Public Works that Council proceed as follows:

Award a two-year contract extension to Havener Tech, 433 Elmwood, Troy, MI 48083 in an amount not to exceed annually of $50,000.00 for completing all repair work required in connection with catch basin, storm sewer, and concrete slab stabilization. Funding is available in the approved

Road Maintenance Budget in account number 204-463-818-119.

Waive the formal bidding process in accordance with Section 3.04.140.D.4 of the Livonia Code of Ordinances, as amended, since no advantage to the City would result from competitive bidding in this situation.

FISCAL CONSIDERATION

204-463-818-119
$50,000.00 annually

ATTACHMENTS

1. 290-18 - Basin - Sewer -Slab Stablization (Havener)
2. Havener Tech Ext Ltr

APPROVED BY

Jacob Rushlow, P.E., Superintendent of Public Service — Date: October 04, 2021

Donald Rohraff, Director of Public Works — Date: October 11, 2021

Michael Slater, Finance Director — Date: October 12, 2021

Maureen Miller Brosnan, Mayor — Date: October 12, 2021

#290-18 RESOLVED, that having considered the report and recommendation of the Director of Public Services, dated July 12, 2018, which bears the signature of the Director of Finance and is approved for submission by the Mayor, the Council does hereby accept the bid of **Havener Tech**, 433 Elmwood, Troy, MI 48083 for performing all work required in connection with **catch-basin, storm sewer, and concrete slab stabilization**, on an as needed basis, in an amount not to exceed **$25,000.00** annually for a two (2) year period (with an option to renew for an additional two year period), the same to be expended from funds already budgeted for this purpose in Account No. 204-463-818-119 (Road Maintenance Budget); FURTHER, the Council does hereby authorize the aforesaid action without competitive bidding inasmuch as the same is based upon the low cooperative bid pricing and in accordance with Section 3.04.140.D.4 of the Livonia Code of Ordinances, as amended; and the Mayor and City Clerk are hereby authorized to execute a contract, subject to approval as to form and substance by the Department of Law, for and on behalf of the City of Livonia with the aforesaid bidder and to do all other things necessary or incidental to the full performance of this resolution.

10.1.2021

Jacob Rushlow, P.E.
Assistant Director Of Public Works
City Of Livonia
Department of Public Works

Re: Havener Tech Catch Basin 2 Year Contract extension

Mr. Rushlow,

Havener Tech would like to extend our current catch basin rehabilitation contract with the city of Livonia for an additional (2) two years, through 2021 and 2022. We would like to honor our current $500.00 price per structure through the duration of the two year extension through 2021 and 2022.

We look forward to working with you in the near future.

Respectfully Submitted,

Mike Guerin

President

Havener Tech,LLC

CITY OF LIVONIA – CITY COUNCIL
MINUTES OF STUDY MEETING HELD OCTOBER 18, 2021

Meeting was called to order in the Auditorium of City Hall, 33000 Civic Center Drive, at 8:35 p.m. by President Kathleen McIntyre. Present: Jim Jolly, Laura Toy, Scott Bahr, Cathy White, Brandon McCullough, Rob Donovic, and President Kathleen McIntyre. Absent: None.

5. REQUEST TO APPROVE FIVE YEAR EXTENSION OF THE LEASE OF FIVE (5) ACRES OF CITY OWNED PROPERTY LOCATED AT 32000 GLENDALE AVENUE: Department of Public Works, re: Mid-Michigan Recycling, L.C., for wood processing and disposal service. (CR 71-17)

Doug Moore, Assistant Superintendent of Public Works, presented this request to Council. He stated I'm here to talk about the Mid-Michigan Wood Waste Recycling Yard. It was first approved by Council in 2009, extended in 2014 and 2017; we are asking Council to consider a five-year contract renewal with an optional extension of five years with the consent of each party. The yard first started in Plymouth Township in 2004 or '05 and moved to the Glendale site in 2009 as a response to the devastation caused by the Emerald Ash Bore. The chips are hauled to the Genesee Power Co-Generation Plant in Flint where they are burned for electricity. Enough electricity is produced to power 2,161 houses a year. City contractors using the benefit come from the Forestry Section of the Department of Public Works. This would be the tree trimming, the removal and the planting contractors, the three City-owned golf courses, the Engineering road projects, the Housing Department and Inspection Department when the City has to remove a dangerous private tree. Livonia receives $44,309.00 annually or $221,545.00 over the five-year lease on the site. In addition, Livonia residents and contractors under contract for City projects receive the added benefit of dumping wood generated material for free. Over the last two years this benefit was costed at $51,750.00 a year or $4,312.50 a month in a free service. The Department is asking Council to approve the five-year contract renewal with a possible five-year extension with Mid-Michigan Wood Recycling Yard on vacant City-owned land atop the Glendale property and I will say that watching Farmington Road at times today it was truck after truck; they were either hauling them out or trucks were hauling them in to dump them. Wood chips are dumped for free; the cost is in the logs and the limbs from trucks that get hauled in.

Vice President Bahr said what you're saying is that otherwise vacant City land where someone who is doing a service for us that we would otherwise have to provide, is bringing this stuff and it powers 2,161 houses per year with electricity and we make money for this and Moore replied yes. Bahr then offered an approving resolution for the Consent Agenda.

Councilmember Donovic stated I've been to this site a few times; I know

residents drop off stumps and other logs and what not to have as residents which I think is a great service for the community and my favorite part is the free wood chip pile that you can drive up there and grab some free wood chips for your house. So I think it's awesome, I'm waiting for Councilwoman Laura Toy to ask me to go pick up some wood chips for her landscaping, so thanks for what everyone does there. I think it's a great service to our residents and like Councilman Bahr said, the City actually generates revenue from this piece of property.

Moore stated if we did not have the wood yard, we would be paying to have our wood chips hauled out.

Vice President Bahr asked Moore if he could make it more of a habit of coming to us with requests for us to make money instead of spending money.

Councilmember Toy said to Moore, I know there's some environmental stuff that can be done with wood as far as the logs and other things that are kind of inventive if you will as we move on. Wood tends to be rather popular these days with this generation of people. I know our Fire Chief has a beautiful wood table in his conference room over there that one of them does some gorgeous work over there. So, there's other things I think that we could repurpose some wood, too, as we move on and we open our minds to perhaps looking at other ventures and other kinds of things environmentally. Our Environmental Committee had a preview of that a bit and while it may not be feasible right now, I would hope in the future we could look at that kind of repurposing of wood.

DIRECTION: APPROVING CONSENT

LETTER TO THE LIVONIA CITY COUNCIL

5.

DPW
October 1, 2021

MEETING DATE	PREPARED BY
October 18, 2021	Jill Russell, Secretary III,

AGENDA ITEM

REQUEST TO APPROVE FIVE YEAR EXTENSION OF THE LEASE OF FIVE (5) ACRES OF CITY OWNED PROPERTY LOCATED AT 32000 GLENDALE AVENUE: Department of Public Works, re: Mid-Michigan Recycling, L.C., for wood processing and disposal service. (CR 71-17)

BACKGROUND

The Public Service Division has received a proposal from Mid-Michigan Recycling, L.C. for a five (5) year continuation of the lease of five acres of City property for wood processing and disposal service. Included in this proposal is the requirement to continue to provide these services at no cost to both Livonia residents, the Public Service Division, and the contractors that are providing tree trim and removal activities for the City of Livonia.

Mid-Michigan Recycling has been leasing this property since 2008 with the current lease due to expire in February, 2022. The company originally approached the City as a result of the Emerald Ash Borer problem and the agreement that they had with the State of Michigan, Department of Agriculture to grind (chip) the Ash wood from the diseased and dead trees. The ability for the City to dispose of the materials that is collected as part of the in-house tree trim and tree removal and the City's brush pick-up programs, allow us to save significant money on the cost of bulk brush grinding and wood chip disposal services. The last time the City paid for these services, it cost approximately $50,000 per year.

This proposal calls for a $3,692.40 per month lease fee ($44,308.80 per year)

Attached is a map indicating the leased property's location.

RECOMMENDATION

It is the recommendation of the Public Works Division that Council grant a property lease to Mid-Michigan Recycling, G-55310 Dort Highway, Flint, MI 48505, for $3,692.40 monthly; a total of $221,544.00 over a five (5) year period. The term of this Agreement will commence February 25, 2022 and shall terminate five years from the commencement date (February 25, 2027), unless otherwise agreed upon by both parties to extend an additional five years (February 25, 2032). It is further recommended that Council authorize the Director of Public Works to approve any minor changes in the lease as, or if, it becomes necessary.

FISCAL CONSIDERATION

None

ATTACHMENTS

1. Glendale Lease MAP
2. Wood Waste Yard Use Agreement 2022-2027
3. R022717 2017 Lease Five Acres of Glendale Property for Wood Processing & Disposal Services CR 71-17

APPROVED BY

Douglas L. Moore, MSA, Assistant Director of Public Works — Date: October 01, 2021

Donald Rohraff, Director of Public Works — Date: October 01, 2021

Michael Slater, Finance Director — Date: October 01, 2021

Maureen Miller Brosnan, Mayor — Date: October 07, 2021

Proposed Continued Lease of City Property for Wood Processing and Disposal

City of Livonia Wood Waste Grinding and Land Use Agreement

This Wood Waste Grinding and Yard Use Agreement (the "Agreement), is made as of the 25th day of February, 2017 (Agreement Date) between the City of Livonia, having an address at 33000 Civic Center Drive, Livonia, Michigan 48154-3097 and Mid-Michigan Recycling, L.C., having an address at G-5310 N. Dort Hwy., Flint, Michigan 48505 ("MMR").

RECITALS

WHEREAS, MMR desires to lease from the City of Livonia approximately five acres of its property located at 32700 Glendale Avenue, Livonia, MI (the "Site") for use as a wood waste receiving yard to receive, store, and grind specific biomass for recycling and transfer of wood chip material to an out-source location.

NOW, THEREFORE, in consideration of the mutual undertakings and benefits accrued to the parties hereunder and in conformity with applicable law, the parties hereto covenant and agree as follows:

1. MMR RESPONSIBILITIES

   MMR shall maintain all permits required from the state of Michigan, the City of Livonia and other governmental entities, including a scrap wood exemption and storm water discharge permit.

   MMR shall enforce City of Livonia's strict policy of no hunting and no trespassing, noting all violations and advising violators to leave the premises forthwith.

   MMR will grind in a timely manner all wood waste delivered to the Site. MMR will provide all grinding equipment, support equipment and personnel necessary for such grinding activities.

   MMR retains total dispensation of all wood waste including tree material entering the Site.

   MMR will secure the Site as directed by the Department of Public Works.

   MMR will remove any material tracked out onto Glendale Road as requested by the Department of Public Works personnel.

   MMR will abide by all existing laws and regulations, both local and State, pertaining to erosion, siltation and pollution of watercourses.

   MMR will abide by all local ordinances.

   MMR will accept and dispose of wood waste from the City, Residents of the City of Livonia and contractors performing work for the City, at no charge.

2. CITY OF LIVONIA RESPONSIBILITIES

City of Livonia shall provide MMR with five (5) acres at the Site to conduct biomass grinding operations and the transfer of wood chips to MMR's hauling contractor.

3. TERM

The term of this Agreement will commence February 25, 2022 shall terminate five years from the commencement date (February 25, 2027), unless otherwise agreed upon by both parties to extend an additional five years (February 25, 2032).

Either MMR or City of Livonia may terminate this agreement with a 30-day written notification.

4. USE FEE

MMR will pay to the City of Livonia a fee of **$3,692.40** for the use of 5 acres at the Site. MMR will pay this fee on a monthly basis. City of Livonia, residents of the City of Livonia, and contractors performing work for the City of Livonia will be able to dispose of their City of Livonia wood waste at no charge to the City. Other users may be charged reasonable tip fees. Stumps and grindings will not be accepted.

5. SURRENDER OF SITE ON TERMINATION

At the expiration (or earlier termination) of the term of this Agreement, MMR will grind all remaining designated biomass and remove all of its equipment from the Site and repair any damages it caused to the Site during operations.

MMR shall restore all disturbed ground on the Site.

All disturbed ground will be leveled and seeded to City of Livonia's satisfaction.

6. INDEMNITY

MMR shall assume all responsibility for and shall indemnify and save City of Livonia, its officers, agents, affiliates and employees harmless from and against all losses, liabilities, claims, demands, payments, actions, legal proceedings, recoveries, costs, expenses, fines, attorney fees, settlements, judgements, orders and decrees of every nature and description brought or recovered against, or incurred by, MMR, City of Livonia officers, agents or employees, or any or all of them, by reason of any; (a) injury to persons, including death or damages, sustained or claimed by MMR's employees, the employees of City of Livonia, or by any other person, and for any theft or loss of or damage to property (including environmental harm), including property of the MMR, City of Livonia, or any other person which may occur or allegedly occur because of or result from, or in any manner are connected with or arise from, (i) any negligence, gross negligence or willful misconduct by MMR, or (ii) any breach of any obligation of MMR under this Agreement; (b) infringement or alleged infringement of any patent, copyright, trademark or other proprietary right by any material, machinery, device, equipment, process or design furnished or used by MMR in the performance of this Agreement; and (c) breach of any other duty or obligation of MMR under this Agreement. Notwithstanding the foregoing, MMR shall not be required to indemnify City of Livonia, its officers, agents, affiliates or employees against liability for damages arising out of injury to persons or theft or loss of or damage to property to the extent caused by or resulting from the negligence, gross negligence or willful misconduct of City of Livonia, its officers, agents, affiliates or employees.

7. INSURANCE

MMR shall independently procure and maintain at its expense during the term of this Agreement, the minimum insurance coverage required by the City of Livonia or at a minimum the following insurance coverage:

a. Worker's Compensation and Employer's Liability-statutory limits
b. General Liability
    i. $1,000,000 Products
    ii. $1,000,000 Personal Injury
c. Automotive Liability
    i. $1,000,000 Combined single limit
d. Owners and Contractors Protective Liability
    i. $2,000,000 Aggregate Limit
    ii. $1,000,000 each occurrence limit

A sample insurance certificate that identifies required changes including naming City of Livonia as additionally insured under General and Automotive Liability is attached (Exhibit A).

8. GOVERNING LAW

This Agreement shall be governed by and construed in accordance with the laws of the State of Michigan.

IN WITNESS WHEREOF, the parties have caused this Agreement to be duly executed as of the date first above written

CITY OF LIVONIA

BY: _____
Dennis K. Wright
Mayor

By: _____
Susan Nash
City Clerk

By: _____
Michael T. Slater
Director of Finance

By: _____
Department of Law

MID-MICHIGAN RECYCLING, I.C.

By: _____

Name: _____

Title: _____

Pursuant to Resolution **#71-17**, Adopted by the City Council on **February 27, 2017**

MUNI-REFUSE
(Public Service Div)
Approval to extend lease of five acres of City-Owned property at 32700 Glendale Avenue with Mid-Michigan Recycling, L.C., for wood processing and disposal service for a period of five (5) years Commencing February 25, 2017.

#71-17 RESOLVED, that having considered a communication from the Director of Public Works, dated February 1, 2017, which bears the signature of the Director of Finance and is approved for submission by the Mayor, the Council does hereby approve an extension of the lease of five (5) acres of the City-Owned property located at 32700 Glendale Avenue, as requested by Mid-Michigan Recycling, L.C., G-5310 Dort Highway, Flint, Michigan 48505, for wood processing and disposal service, for a period of five (5) years commencing February 25, 2017, at a monthly lease rate of $3,692.40, which includes a 2% increase from the previous contract, for total City revenue of $221,544.00 over a five (5) year period, subject to all other terms and conditions previously approved in Council Resolution #11-13, adopted on January 14, 2013; and the Mayor and City Clerk are hereby authorized to execute a lease agreement for and on behalf of the City of Livonia with the aforesaid company, approved as to form and substance by the Department of Law, and to do all other things necessary or incidental to the full performance of this resolution.

CONSENT AGENDA ITEMS (Regular Meeting of February 27, 2017)

Motion by: ***Brosnan***
Seconded by: ***White***

ROLL CALL:
Ayes: ***Jolly, White, Bahr, Kritzman, Brosnan, and McIntyre***

Nays: ***None***
Absent: ***Meakin***

CITY OF LIVONIA – CITY COUNCIL
MINUTES OF STUDY MEETING HELD OCTOBER 18, 2021

Meeting was called to order in the Auditorium of City Hall, 33000 Civic Center Drive, at 8:35 p.m. by President Kathleen McIntyre. Present: Jim Jolly, Laura Toy, Scott Bahr, Cathy White, Brandon McCullough, Rob Donovic, and President Kathleen McIntyre. Absent: None.

6. REQUEST TO AUTHORIZE ADDITIONAL APPROPRIATION AND EXPENDITURE: Department of Public Works, re: for the additional scope of work through change order on the Cavell Street water main replacement project and provide payment to D&D Water and Sewer, Inc. in an amount not to exceed $43,752.59 for these services, from budgeted funds of the Water and Sewer Fund. (CR 180-21)

Jacob Rushlow, Assistant Director of Public Works, presented this request to Council. He said this item is in relation to the Cavell water main replacement project that was awarded to D & D Water and Sewer per Council Resolution 180-21. During the installation of this new water main we discovered there were adjacent underground utilities too close to the planned pipe location and the new water main had to be moved from that location which was in the greenbelt of the right of way between the sidewalk and the curb; we had to move it further away from the road and directly under the sidewalk was our only clear path to install this new main. Unfortunately by doing so, that necessitated the need to remove and replace a significant amount of sidewalk to complete the water main installation. In addition to that, there was a previously unknown 3-inch diameter water service line that was discovered within the project and it had to be replaced with the new installation of the new main which was not planned. All that combined, our consulting engineer doing the construction administration had prepared a change order in the amount of $43,752.59, that would need to be approved for additional funds to proceed with payment for these additional scope items from budgeted funds of the Water and Sewer Fund.

Councilmember Jolly offered an approving resolution for the Consent Agenda.

DIRECTION: APPROVING CONSENT

LETTER TO THE LIVONIA CITY COUNCIL

6.

DPW
October 7, 2021

MEETING DATE	PREPARED BY
October 18, 2021	Jill Russell, Secretary III,

AGENDA ITEM

REQUEST TO AUTHORIZE ADDITIONAL APPROPRIATION AND EXPENDITURE: Department of Public Works, re: for the additional scope of work through change order on the Cavell Street water main replacement project and provide payment to D&D Water and Sewer, Inc. in an amount not to exceed $43,752.59 for these services, from budgeted funds of the Water and Sewer Fund. (CR 180-21)

BACKGROUND

The Cavell water main replacement project was awarded to D&D Water and Sewer, Inc. per Council Resolution 180-21. During installation of the new water main we discovered adjacent underground utilities were too close to the planned pipe location and the new water main had to be moved from a location in the right-of-way greenbelt to a location underneath the existing sidewalk. This necessitated the need to remove and replace a significant amount of sidewalk to complete the water main installation. In addition, a previously unknown 3-inch diameter service line was discovered within the project limits and had to be replaced with the new water main installation.

RECOMMENDATION

In order to proceed with payment for these additional scope of work items the Department of Public Works requests that Council authorize an additional expenditure not-to-exceed $43,752.59 from budgeted funds of the Water and Sewer Fund (592-158-000).

FISCAL CONSIDERATION

592-158-000
$43,752.59

ATTACHMENTS

1. OHM-D&D Change Order

APPROVED BY

Jacob Rushlow, P.E., Superintendent of Public Service — Date: October 07, 2021

Donald Rohraff, Director of Public Works — Date: October 07, 2021

Michael T Slater

Date: October 08, 2021

Michael Slater, Finance Director

Maureen Miller Brosnan

Date: October 08, 2021

Maureen Miller Brosnan, Mayor

CHANGE ORDER

Project: City of Livonia - Cavell Street Water Main Replacement

Job Number: 0090-21-0110

Owner: City of Livonia
33000 Civic Center Drive
Livonia, MI 48154
(734) 466-2233

Change Order Number: 1
Date: 9/28/2021
Print Date: 9/28/2021

Contractor: D & D Water & Sewer
5700 S Sheldon Road
Canton, MI 48188
(734) 397-3386

Note:

TO THE CONTRACTOR:

You are hereby directed to comply with the changes to the contract documents.This change order reflects work completed or anticipated.

OHM Advisors
34000 Plymouth Road
Livonia, MI 48150
(734) 522-6711

CURRENT PROJECT PLANS AND SPECIFICATIONS WILL BE ADHERED TO UNLESS SPECIFICALLY CHANGED BY THIS CHANGE ORDER DOCUMENT.

THE CONTRACT AMOUNT WILL BE CHANGED BY THE SUM OF:	$43,752.59
Original Contract Amount:	$371,836.56
Contract Amount Including Previous Change Orders:	$371,836.56
Amount of this Change Order:	$43,752.59
REVISED CONTRACT AMOUNT:	$415,589.15

Accepted By

D & D Water & Sewer Mark DiMichele Date 9/28/2021

Approved By

Jacob Rushlow - Superintendent of Public Works - City of Livonia - DPW _____ Date _____

Recommended By

Michael McNutt, Engineer _____ Date _____

Items

Item No.	Description	Previous Authorized Quantity		Quantity Change	New Authorized Quantity	Unit Price	Total Increase
THE FOLLOWING ITEMS AND OR CONTRACT UNIT PRICES SHALL BE ADDED TO THE CONTRACT AMOUNT							
Division: A							
6	Maintenance Gravel	15.00	Ton	69.31	84.31	$25.00	$1,732.75
7	Sanitary Sewer Lead Locate	7.00	Ea	36.00	43.00	$204.75	$7,371.00
11	Connection to Existing Water Main	3.00	Ea	2.00	5.00	$2,500.00	$5,000.00
14	Water Main, HDPE, DR-11, 8-inch, Directional Drill	2010.00	Ft	64.00	2074.00	$92.69	$5,932.16
21	Sidewalk Remove	235.00	Syd	268.20	503.20	$3.00	$804.60
23	Aggregate base 4 in Modified	235.00	Syd	209.71	444.71	$2.00	$419.42
Additional Items to the Contract:							
26	Curb Box & Rod	0.00	Ea	11.00	11.00	$130.00	$1,430.00
27	Sidewalk, Conc, 4 inch	0.00	Sft	4002.40	4002.40	$5.00	$20,012.00
28	Driveway, Nonreinf Conc, 6 inch	0.00	Syd	37.40	37.40	$48.00	$1,795.20
29	Curb and Gutter, Rem	0.00	Ft	353.00	353.00	$8.00	$2,824.00
30	3" Service to Church	0.00	Dlr	1.00	1.00	$9,451.92	$9,451.92
				SUB-TOTAL INCREASES DIVISION A:			**$56,773.05**
THE FOLLOWING ITEMS AND OR CONTRACT UNIT PRICES SHALL BE SUBTRACTED FROM THE CONTRACT AMOUNT							
Division: A							
3	Exploration Excavation	1.00	Ea	-1.00	0.00	$200.00	($200.00)
4	Erosion Control, Inlet Protection, Fabric Drop	28.00	Ea	-24.00	4.00	$80.00	($1,920.00)
5	Erosion Control, Silt Fence	50.00	Ft	-50.00	0.00	$5.00	($250.00)
12	Water Service, Connection	46.00	Ea	-1.00	45.00	$600.00	($600.00)
13	Abandon Water Main w/Flowable Fill	2010.00	Ft	-30.00	1980.00	$25.00	($750.00)
16	Fire Hydrant, Rem	3.00	Ea	-3.00	0.00	$350.00	($1,050.00)
18	Gate Well, Rem	4.00	Ea	-2.00	2.00	$150.00	($300.00)
19	Water Main 8 in DI	50.00	Ft	-50.00	0.00	$95.00	($4,750.00)
22	Pvt Rem Modified	235.00	Syd	-179.56	55.44	$8.50	($1,526.26)
24	Aggregate base 6 in Modified	10.00	Syd	-5.84	4.16	$5.00	($29.20)
25	Aggregate base 8 in Modified	235.00	Syd	-235.00	0.00	$7.00	($1,645.00)
				SUB-TOTAL DECREASES DIVISION A:			**($13,020.46)**

CITY OF LIVONIA – CITY COUNCIL
MINUTES OF STUDY MEETING HELD OCTOBER 18, 2021

Meeting was called to order in the Auditorium of City Hall, 33000 Civic Center Drive, at 8:35 p.m. by President Kathleen McIntyre. Present: Jim Jolly, Laura Toy, Scott Bahr, Cathy White, Brandon McCullough, Rob Donovic, and President Kathleen McIntyre. Absent: None.

9. REQUEST TO APPROVE THE SIXTH AMENDMENT TO LEASE AGREEMENT BETWEEN THE CITY OF LIVONIA AND NEW CINGULAR WIRELESS PCS, LLC., d/b/a AT&T WIRELESS PCS, LLC: Department of Law, re: to accommodate request to move and upgrade the equipment on the tower. (CR 20-21, 241-20, 406-18, CR 29-12, CR 120-98, and CR 18-97)

Paul Bernier, City Attorney, presented this request to Council. He stated this is just an upgrade to the Tower, they're going to add some more items to it and we're going to charge them some more money for that use.

President McIntyre then asked if we're limited as to what we can charge and Bernier replied absolutely.

Councilmember Donovic offered an approving resolution for the Consent Agenda.

Councilmember White asked if the upgrade had to do with the 5G and Bernier replied do we have to even mention 5G, and then stated that Mr. Fisher took care of that, I don't think it does, I think they're just adding more capabilities, but I don't think it's 5G. I think it's too far to another 5G tower to make it.

DIRECTION: APPROVING CONSENT

LETTER TO THE LIVONIA CITY COUNCIL

9.

Law
October 5, 2021

MEETING DATE	PREPARED BY
October 18, 2021	Carol Driskill, Legal Stenographer II,

AGENDA ITEM

REQUEST TO APPROVE THE SIXTH AMENDMENT TO LEASE AGREEMENT BETWEEN THE CITY OF LIVONIA AND NEW CINGULAR WIRELESS PCS, LLC., d/b/a AT&T WIRELESS PCS, LLC: Department of Law, re: to accommodate request to move and upgrade the equipment on the tower. (CR 20-21, 241-20, 406-18, CR 29-12, CR 120-98, and CR 18-97)

BACKGROUND

Since 1997, a portion of the Livonia Police Department communications tower has been leased to AT&T for cellular communication services. The original lease was amended in 1998 to allow AT&T to move its antennas approximately 50 feet higher on the tower, at which time AT&T paid the City a $15,000 one-time fee for agreeing to that amendment.

Since then, AT&T has agreed to additional amendments as it has augmented its presence on the tower. Most recently, AT&T rented space at the base of the tower for a natural gas-powered generator for $150.00 per month.

Now AT&T has proposed a sixth lease amendment involving a comparatively modest addition of power and fiber lines and related equipment for a one-time payment of $2,500. If this is acceptable, please adopt a resolution in substantially the following form:

> RESOLVED, that having considered a communication from the Department of Law, dated October 5, 2021, in connection with a proposed Sixth Amendment to Lease Agreement between the City of Livonia and New Cingular Wireless PCS, LLC, a Delaware LLC, as successor-in-interest to AT&T Wireless PCS, Inc., a Delaware corporation, to which is attached as Exhibit 1 certain Construction Drawings, i.e. a Cover Page and pages C-1 and C-2, and T-1 through T-4, prepared by Black & Veatch, and certified by Ping Jiang of Black and Veatch on July 28, 2021, for the proposed upgrade to be made pursuant to said lease, THE COUNCIL DOES HEREBY AUTHORIZE THE MAYOR AND CITY CLERK, FOR AND ON BEHALF OF THE CITY OF LIVONIA, TO EXECUTE THE PROPOSED SIXTH AMENDMENT TO LEASE AGREEMENT BETWEEN THE CITY OF LIVONIA AND NEW CINGULAR WIRELESS PCS, LLC, AS SUCCESSOR-IN-INTEREST TO AT&T WIRELESS PCS, Inc., a Delaware corporation, SUBJECT TO APPROVAL AS TO FORM BY THE DEPARTMENT OF LAW, and the Mayor and City Clerk are hereby requested to do all things necessary or incidental to the full performance of this resolution.

RECOMMENDATION

Approve and Execute Sixth Amendment to Lease Agreement

FISCAL CONSIDERATION

ATTACHMENTS

1. AT&T 6th Amendment to Lease Agreement - unsigned
2. S011812 Amendment to ATT - New Cingular Wireless PCS Lease Agreement to lease space on the Police Communication Cell Tower (CELLULAR TOWER)

APPROVED BY

Mike Fisher, Chief Assistant City Attorney — Date: October 06, 2021

Paul Bernier, City Attorney — Date: October 06, 2021

Benjamin McDermott, Deputy Chief of Police — Date: October 06, 2021

Michael Slater, Finance Director — Date: October 06, 2021

Maureen Miller Brosnan, Mayor — Date: October 07, 2021

SIXTH AMENDMENT TO LEASE AGREEMENT

This Sixth amendment to Lease Agreement entered into on _____, 2021, between the City of Livonia ("Landlord"), a municipal corporation, 33000 Civic Center Drive, Livonia, Michigan 41854, and New Cingular Wireless PCS, LLC, a Delaware LLC, as successor-in-interest to AT&T Wireless PCS, Inc., a Delaware corporation ("Tenant"), 1025 Lenox Park Blvd NE, 3rd Floor, Atlanta, GA 30319.

WHEREAS, Landlord and Tenant entered into a Lease Agreement dated January 30, 1997 ("Lease"), and amended same on February 26, 1998 (the "First Amendment"), January 26, 2012 (the "Second Amendment"), November 19, 2018 (the "Third Amendment"), on or about August 19, 2020 (the "Fourth Amendment") and March 9, 2021 (the "Fifth Amendment") both parties now desire to amend the Lease a sixth time;

NOW THEREFORE, for and in consideration of value received and the mutual promises contained in the Lease and First, Second, Third, Fourth and Fifth Amendments, as well as the promises contained herein (this document being hereinafter known as the "Sixth Amendment;" the Lease and the First Amendment, Second Amendment, Third Amendment, Fourth Amendment and Fifth Amendment being hereafter collectively referred to as the "Lease Agreement"), Landlord and Tenant agree as follows:

A new paragraph 1(f) shall read as follows:

"Upon receipt by Landlord of a one-time payment of $2,500.00 from Tenant, Tenant shall have the right to modify its existing tower loading. Tenant shall have the right to the following modifications.

1) Replacing three (3) Powerwave RA21.7752.00 for three (3) Nokia AEQK antenna.

2) Adding one (1) Raycap DC9-48-60-24-8C-EV surge arrestor.

3) Adding one (1) Rosenburger 0.96" DC power line

4) Adding one (1) Rosenburger 0.375" Fiber line

In addition to the other antennas and equipment permitted in the Agreement. Landlord consents to the installation and operation of additional antennas, associated cables and equipment as more completely described on attached Exhibit 1, Construction Drawings. Landlord's execution of this sixth Amendment will signify Landlord's approval of Exhibit 1. The equipment will be located at 143', the same height as all the Tenant's other equipment. The DC Power and Fiber trucks will be connected to the new equipment."

2) Tenant's replaced and unused equipment will be removed from the Landlord's tower. Removal of obsolete equipment will be coordinated with construction activities related to modifications of active AT&T equipment at one or more preconstruction meetings of the parties hereto.

3) All other provisions of the Lease Agreement are to remain in full force and effect.

(Signatures appear on the following page)

WITNESSES:

_____

_____

LANDLORD'S ADDRESS:

City of Livonia
33000 Civic Center Drive
Livonia, MI 48154

LANDLORD:

CITY OF LIVONIA
A Michigan municipal corporation

By: _____
Maureen Miller Brosnan, Mayor

By: _____
Susan Nash, City Clerk

Date: _____

Pursuant to Council Resolution _____

Adopted on _____

APPROVED AS TO FORM:

By: _____
Department of Law

Date: _____

WITNESSES:

Roland Rencher

_____

_____

TENANT'S ADDRESS:

New Cingular Wireless PCS
1025 Lenox Park Blvd NE, 3rd Floor
Atlanta, GA 30319

TENANT:

New Cingular Wireless PCS, LLC
By: AT&T Mobility Corporation
Its: Manager

By: _____

Name: Terry Lundquist

Title: Sr. Real Estate & Construction Mgr

Date: 9/21/21

Exhibit 1

Construction Drawings

SITE PHOTO

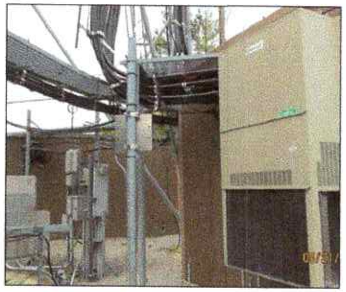

PROJECT INFORMATION

SITE ADDRESS:	15080 FARMINGTON ROAD LIVONIA, MI 48154
COUNTY:	WAYNE
SITE NAME:	LIVONIA POLICE TOWER
SITE NUMBER:	MI2109
FA NUMBER:	10076130
USID NUMBER:	1835
LATITUDE:	42° 23' 37" N
LONGITUDE:	83° 22' 17" W
GROUND ELEVATION:	662' AMSL
TOWER OWNER:	CITY OF LIVONIA – –
SITE ACQUISITION MANAGER:	KRISTEN CHASE 412.269.5950
CONSTRUCTION MANAGER:	FRANK VITTO 913.458.6194
LEAD ENGINEER:	JORDAN HENRY 913.458.4293

PROJECT MANAGER:	STEPHANIE HARDWICK
PHONE:	317.462.2269
APPLICANT:	AT&T MOBILITY
CONTACT:	–
PHONE:	–

AT&T MOBILITY

PROJECT: LTE 5G NR CBAND
AT&T SITE ID: MI2109
AT&T FA#: 10076130

LIVONIA POLICE TOWER
LIVONIA, MI 48154

AREA MAP

NO SCALE

ENGINEERING

2015 MICHIGAN BUILDING CODE
2017 MICHIGAN ELECTRICAL CODE
TIA-222-G OR LATEST EDITION

DRAWING INDEX

SHEET NO:	SHEET TITLE
TITLE PAGE	TITLE PAGE
–	–
C-1	SHELTER PLAN & DC CIRCUIT SCHEDULE
C-2	EQUIPMENT DETAILS
–	–
T-1	ELEVATION
T-2	ANTENNA LAYOUTS
T-3	ANTENNA CONFIGURATION
T-4	EQUIPMENT DETAILS
T-5	STRUCTURAL NOTES
T-6	EQUIPMENT NOTES
–	–
E-1	ELECTRICAL SECTION NOTES
–	–
N-1	GENERAL NOTES
N-2	GENERAL NOTES
–	–
–	AT&T RF PLUMBING DIAGRAMS ATTACHED

REFERENCE MATERIALS

THESE LTE DRAWINGS ARE BASED ON THE AT&T RFDS DATED 06/09/2021

11"x17" PLOT WILL BE HALF SCALE UNLESS OTHERWISE NOTED

CONTRACTOR SHALL VERIFY ALL PLANS & EXISTING DIMENSIONS & CONDITIONS ON THE JOB SITE & SHALL IMMEDIATELY NOTIFY THE ENGINEER IN WRITING OF ANY DISCREPANCIES BEFORE PROCEEDING WITH THE WORK OR BE RESPONSIBLE FOR SAME

TO OBTAIN LOCATION OF PARTICIPANTS UNDERGROUND FACILITIES BEFORE YOU DIG IN MICHIGAN, CALL MISS DIG
811 OR (800) 482-7171
www.missdig.org
48 HOURS BEFORE YOU DIG

-THESE PLANS ADHERE TO ALL OF THE REQUIREMENTS CALLED OUT IN THE JURISDICTION PLANNING AND ZONING FOR ANTENNAS AND SUPPORT STRUCTURES WHERE SITE IS LOCATED.
-SUBCONTRACTOR SHALL VERIFY ALL PLANS AND EXISTING CONDITIONS ON SITE. IMMEDIATELY NOTIFY ENGINEER OF ANY DISCREPANCIES PRIOR TO PERFORMING ANY WORK OR BE RESPONSIBLE FOR THE SAME

APPLICANT/OWNER:
AT&T MOBILITY
16025 NORTHLAND DR
SOUTHFIELD, MI 48075

PREPARED BY:
BLACK & VEATCH
6800 W. 115TH ST, SUITE 2292
OVERLAND PARK, KANSAS 66211
(913) 458-2000

PROJECT NUMBER: 129341

STATE OF MICHIGAN
PING JIANG
ENGINEER
No.
6201062190
LICENSED PROFESSIONAL ENGINEER
07/28/2021

IT IS A VIOLATION OF LAW FOR ANY PERSON, UNLESS THEY ARE ACTING UNDER THE DIRECTION OF A LICENSED PROFESSIONAL ENGINEER, TO ALTER THIS DOCUMENT.

LANDLORD/PROPERTY OWNER SIGNATURE

REV	DATE	DESCRIPTION
0	07.28.21	ISSUED FOR CONSTRUCTION

PROJECT LOCATION: USID (1835)
LIVONIA POLICE TOWER
15080 FARMINGTON ROAD
LIVONIA, MI 48154

DRAWING DESCRIPTION:
TITLE PAGE

DRAWING NUMBER:
TITLE PAGE

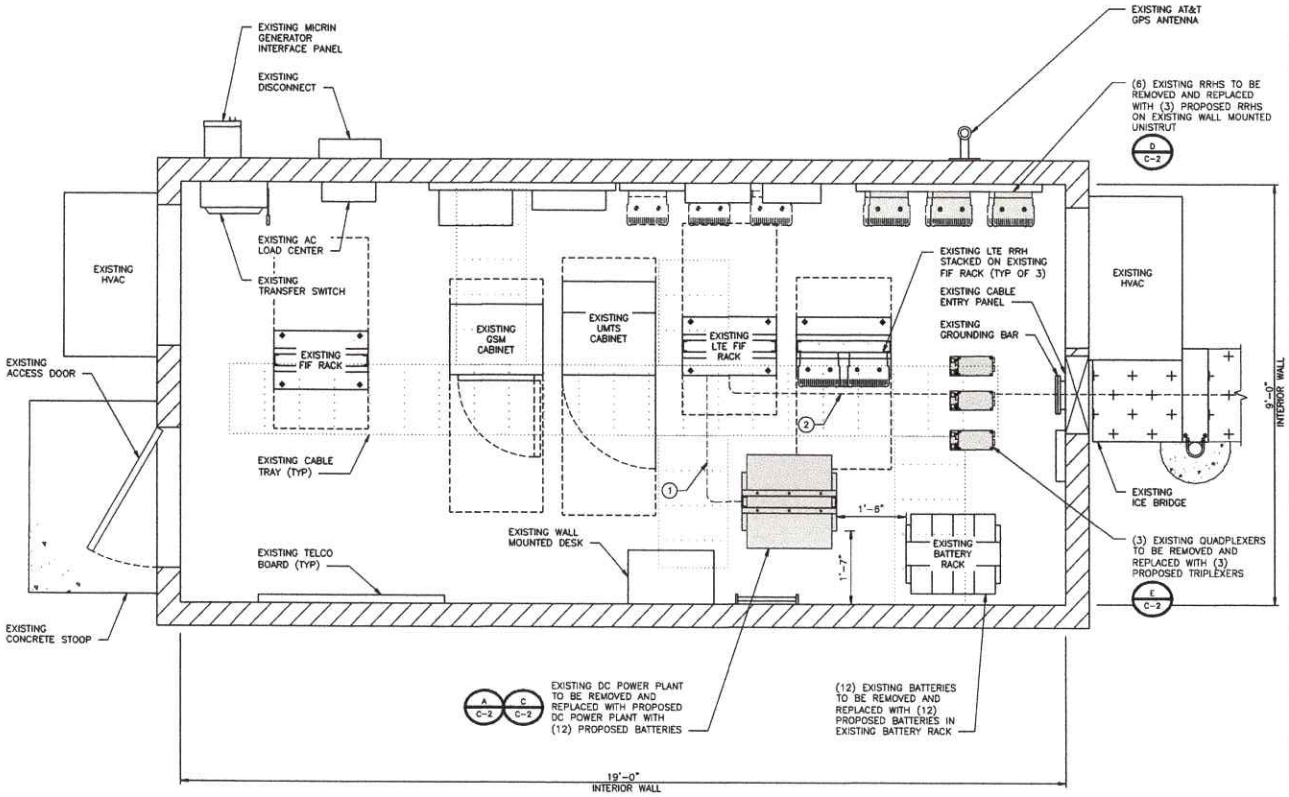

FINAL SHELTER PLAN

12" 6" 0 1' 2' 3'
3/4"=1'-0"

1

1. CONTRACTOR SHALL FIELD VERIFY ALL DIMENSIONS.
2. CONTRACTOR SHALL MAINTAIN A 10'-0" MINIMUM SEPARATION BETWEEN THE EXISTING/PROPOSED LTE GPS ANTENNA AND TRANSMITTING ANTENNAS.
3. DC POWER WIRING SHALL BE COLOR CODED AT EACH END FOR IDENTIFYING +24V AND -48V CONDUCTORS. RED MARKINGS SHALL IDENTIFY +24V AND BLUE MARKINGS SHALL IDENTIFY -48V. REFER TO ATT-002-290-701.
4. NON-LTE DC POWER WIRING SIZE 14 AWG TO 10 AWG SHALL BE TELCOFLEX III. DC POWER WIRING 8 AWG AND LARGER SHALL BE TELCOFLEX IV.
5. LTE POWER WIRING SHALL BE IN ACCORDANCE WITH ATT-002-290-531.
6. GROUNDING AND BONDING SHALL BE IN ACCORDANCE WITH ATT-TP-76416.
7. THE PROPOSED ELECTRICAL WORK FOR THE SCOPE OF THIS PROJECT IS LOW VOLTAGE DC POWER ONLY.
8. PROPOSED LTE BBU TO BE INSTALLED AND GROUNDED BY OTHERS, PER AT&T INSTALLATION STANDARDS.
9. EXISTING RACK MOUNTED DC SURGE PROTECTION UNIT SHALL BE SWAPPED OUT WITH PROPOSED RACK MOUNTED DC SURGE PROTECTION UNIT, WHEN REQUIRED FOR UPGRADE.

NOTES

NO	FROM	TO	CONFIGURATION
1	24VDC/48VDC DISTRIBUTION PANEL	RAYCAP SURGE PROTECTION DC12 (RACK MOUNTED)	(2) 1-#6 TELCOFLEX IV DC CABLE (FOR RRHS REQUIRING 30 AMP SPECIFICATION)
2	RAYCAP SURGE PROTECTION DC12 (RACK MOUNTED)	RAYCAP SURGE PROTECTION DC9 (TOWER)	(3) 6-#6 THHN/THWN/XW-1 TYPE TC-ER DC CABLE

DC CIRCUIT SCHEDULE

INSTALL:

(1) PROPOSED DC POWER PLANT WITH (12) PROPOSED BATTERIES
(12) PROPOSED BATTERIES IN EXISTING BATTERY RACK
(1) PROPOSED #6 DC POWER TRUNK
(1) PROPOSED 24-PAIR FIBER TRUNK
(1) PROPOSED TRIPLEXERS
(3) PROPOSED RRHs

REMOVE:

(1) EXISTING DC POWER PLANT
(12) EXISTING BATTERIES FROM EXISTING BATTERY RACK
(1) EXISTING BATTERY RACK
(6) EXISTING RRHs
(3) EXISTING QUADPLEXERS

SCOPE OF WORK

APPLICANT/OWNER:

AT&T MOBILITY

16025 NORTHLAND DR
SOUTHFIELD, MI 48075

PREPARED BY:

BLACK & VEATCH

6800 W. 115TH ST, SUITE 2292
OVERLAND PARK, KANSAS 66211
(913) 458-2000

PROJECT NUMBER: 129341

STATE OF MICHIGAN
PING JIANG
ENGINEER
No.
6201062190
LICENSED PROFESSIONAL ENGINEER

07/28/2021

IT IS A VIOLATION OF LAW FOR ANY PERSON, UNLESS THEY ARE ACTING UNDER THE DIRECTION OF A LICENSED PROFESSIONAL ENGINEER, TO ALTER THIS DOCUMENT.

LANDLORD/PROPERTY OWNER SIGNATURE

REV	DATE	DESCRIPTION
0	07.28.21	ISSUED FOR CONSTRUCTION

PROJECT LOCATION: USID (1835)

LIVONIA POLICE TOWER

15080 FARMINGTON ROAD
LIVONIA, MI 48154

DRAWING DESCRIPTION:

SHELTER PLAN
& DC CIRCUIT SCHEDULE

DRAWING NUMBER:

C-1

EMERSON NETSURE 7100 SERIES

DIMENSIONS, HxWxD:	84"x25.5"x22"
LOAD RATING:	1200 lbs
COLOR:	GRAY
FINISH:	POWDER COAT

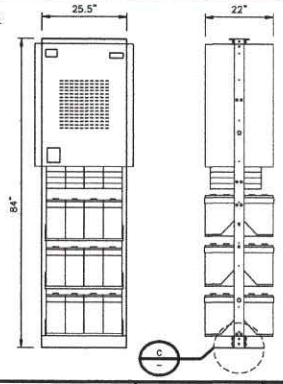

DC POWER PLANT SPECIFICATIONS | NO SCALE | A

NOT USED | NO SCALE | B

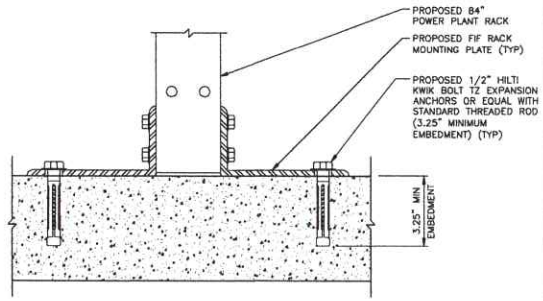

CONCRETE ANCHOR DETAIL | NO SCALE | C

AIRSCALE DUAL RRH 4T4R B25/66 320W AHFIB

DIMENSIONS, HxWxD:	28.7"x15.4"x9.4" (730x390x240mm)
WEIGHT:	88.2 lbs (40kg)

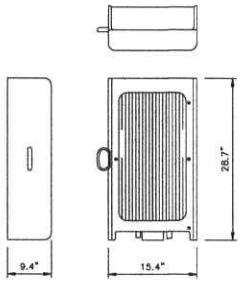

RRH SPECIFICATIONS | NO SCALE | D

KAELUS TBC0038F1V94-2

DIMENSION (HxDxW):	7.48"x6.30"x2.41" (190x160x61mm)
WEIGHT:	13.23 lbs (6.0 kg)
FINISH:	RAL7035, LIGHT GREY
CONNECTOR:	4.3-10 (F) X 4 LONG NECK (SINGLE UNIT) 4.3-10 (F) X 8 LONG NECK (TWIN UNIT)
MOUNTING:	VERTICAL, POLE/WALL
RoHS COMPLIANT:	YES

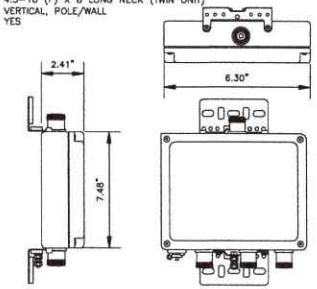

TRIPLEXER DETAIL | NO SCALE | E

NOT USED | NO SCALE | F

NOT USED | NO SCALE | G

NOT USED | NO SCALE | H

NOT USED | NO SCALE | J

APPLICANT/OWNER:

AT&T MOBILITY

16025 NORTHLAND DR
SOUTHFIELD, MI 48075

PREPARED BY:

BLACK & VEATCH

6800 W. 115TH ST, SUITE 2292
OVERLAND PARK, KANSAS 66211
(913) 458-2000

PROJECT NUMBER: 129341

STATE OF MICHIGAN
PING JIANG
ENGINEER
No.
6201062190
LICENSED PROFESSIONAL ENGINEER

07/28/2021

IT IS A VIOLATION OF LAW FOR ANY PERSON, UNLESS THEY ARE ACTING UNDER THE DIRECTION OF A LICENSED PROFESSIONAL ENGINEER, TO ALTER THIS DOCUMENT.

LANDLORD/PROPERTY OWNER SIGNATURE

REV	DATE	DESCRIPTION
0	07.28.21	ISSUED FOR CONSTRUCTION

PROJECT LOCATION: USID (1835)

LIVONIA POLICE TOWER

15080 FARMINGTON ROAD
LIVONIA, MI 48154

DRAWING DESCRIPTION:

EQUIPMENT DETAILS

DRAWING NUMBER:

C-2

THIS DOCUMENT WAS PREPARED BASED ON THE INFORMATION PROVIDED TO BLACK & VEATCH. IF EXISTING CONDITIONS DO NOT REFLECT THOSE REPRESENTED, THESE CONSTRUCTION DRAWINGS ARE NO LONGER VALID.

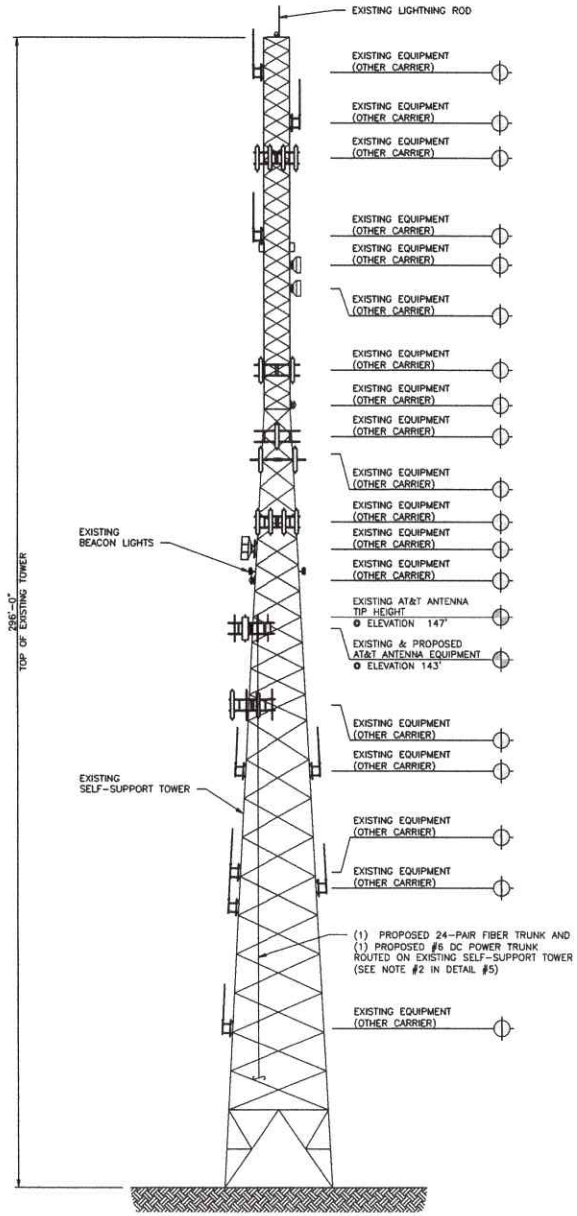

FINAL TOWER ELEVATION

16' 12' 8' 4' 0 16' 32'
1/16"=1'-0"

1

THE PASSING STRUCTURAL ANALYSIS FOR THE EXISTING TOWER AT THIS SITE WAS COMPLETED BY BLACK & VEATCH ON JULY 16, 2021 CONFORMING TO TIA-222-H. ACCORDING TO THE BLACK & VEATCH STRUCTURAL ANALYSIS, THE TOWER HAS SUFFICIENT CAPACITY TO SUPPORT THE EXISTING AND PROPOSED LOADINGS.

STRUCTURAL ANALYSIS NOTE 2

THE PASSING ANTENNA MOUNT EVALUATION LETTER FOR THE EXISTING MOUNT WAS COMPLETED BY BLACK & VEATCH ON JUNE 23, 2021. THE MOUNT HAS SUFFICIENT CAPACITY FOR THE EXISTING AND PROPOSED LOADING OBSERVED ON THESE CONSTRUCTION DRAWINGS.

MOUNT ANALYSIS NOTE 3

INSTALL:
(3) PROPOSED LTE ANTENNAS
(1) PROPOSED FIBER TRUNK
(1) PROPOSED #6 AWG DC POWER TRUNK
(1) PROPOSED DC9 SURGE PROTECTION UNIT

REMOVE:
(3) EXISTING ANTENNAS

SCOPE OF WORK 4

1. WHEN STACKING CABLES 3 OR MORE DEEP, USE STACKABLE SNAP-INS, TALLEY PART NUMBER SSH-158-3 (OR ENGINEER APPROVED EQUAL).
2. CONTRACTOR SHALL CONFIRM THE FINAL CABLE ROUTING PLAN WITH THE STRUCTURAL ANALYSIS.

NOTES 5

APPLICANT/OWNER:
AT&T MOBILITY
16025 NORTHLAND DR
SOUTHFIELD, MI 48075

PREPARED BY:
BLACK & VEATCH
6800 W. 115TH ST, SUITE 2292
OVERLAND PARK, KANSAS 66211
(913) 458-2000
PROJECT NUMBER: 129341

STATE OF MICHIGAN
PING JIANG
ENGINEER
No. 6201062190
LICENSED PROFESSIONAL ENGINEER
07/28/2021

IT IS A VIOLATION OF LAW FOR ANY PERSON, UNLESS THEY ARE ACTING UNDER THE DIRECTION OF A LICENSED PROFESSIONAL ENGINEER, TO ALTER THIS DOCUMENT.

LANDLORD/PROPERTY OWNER SIGNATURE

REV	DATE	DESCRIPTION
0	07.28.21	ISSUED FOR CONSTRUCTION

PROJECT LOCATION: USID (1835)
LIVONIA POLICE TOWER
15080 FARMINGTON ROAD
LIVONIA, MI 48154

DRAWING DESCRIPTION:
ELEVATION

DRAWING NUMBER:
T-1

THIS DOCUMENT WAS PREPARED BASED ON THE INFORMATION PROVIDED TO BLACK & VEATCH. IF EXISTING CONDITIONS DO NOT REFLECT THOSE REPRESENTED, THESE CONSTRUCTION DRAWINGS ARE NO LONGER VALID.

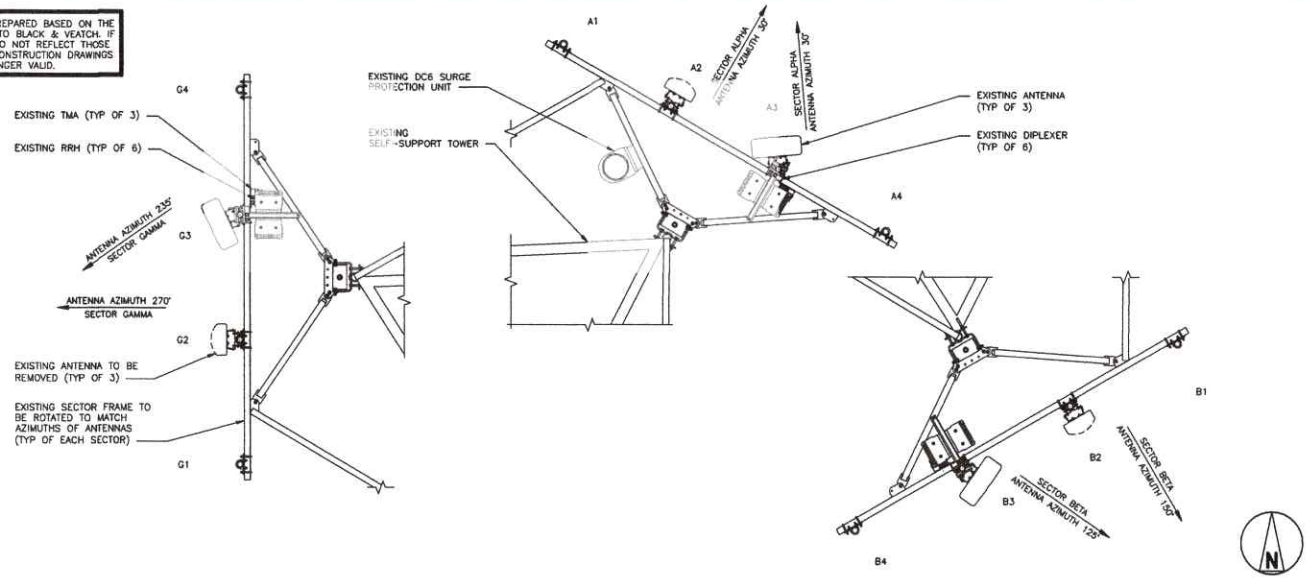

EXISTING ANTENNA LAYOUT

12" 6" 0 1' 2' 3' 4' 5'
1/2"=1'-0"

1

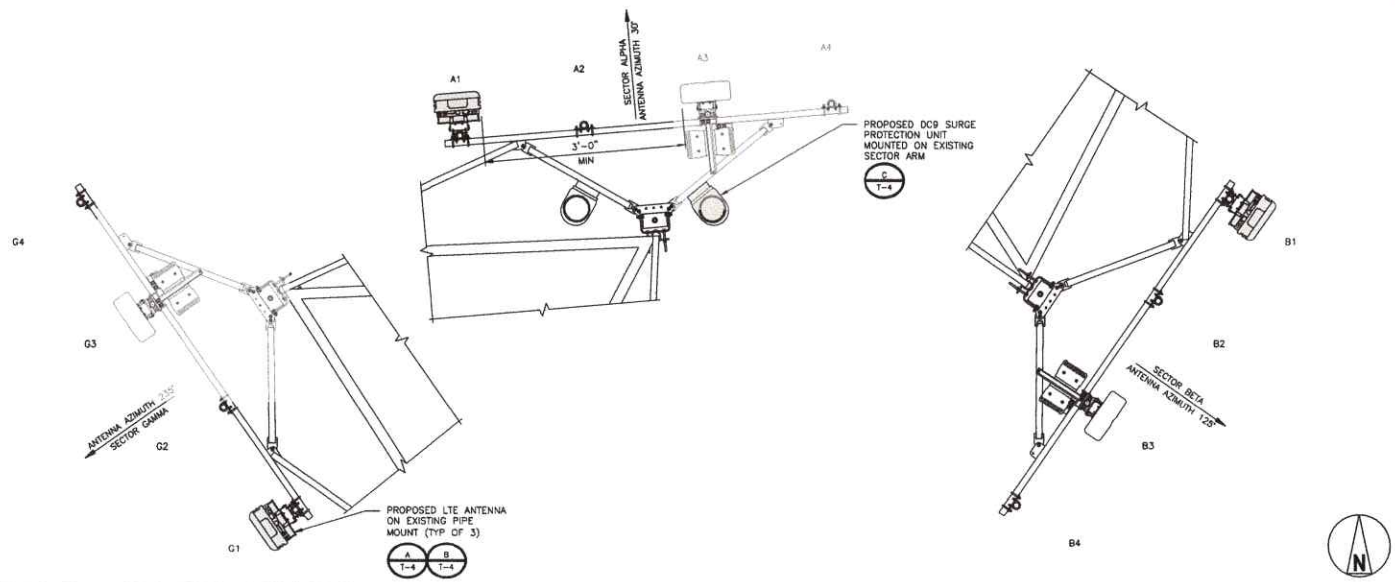

FINAL ANTENNA LAYOUT

12" 6" 0 1' 2' 3' 4' 5'
1/2"=1'-0"

2

THE PASSING ANTENNA MOUNT EVALUATION LETTER FOR THE EXISTING MOUNT WAS COMPLETED BY BLACK & VEATCH ON JUNE 23, 2021. THE MOUNT HAS SUFFICIENT CAPACITY FOR THE EXISTING AND PROPOSED LOADING OBSERVED ON THESE CONSTRUCTION DRAWINGS.

MOUNT ANALYSIS NOTE 3

1. CONTRACTOR SHALL REFER TO THE LATEST RFDS PRIOR TO THE CONSTRUCTION COMMENCING.
2. BLACK AND VEATCH RECOMMENDS EQUAL HORIZONTAL SPACING OF ANTENNAS TO ENSURE ADEQUATE WEIGHT DISTRIBUTION.
3. CONTRACTOR SHALL ENSURE 3'-0" MINIMUM SPACING BETWEEN LTE 700 B17 AND LTE 700 B14 (FIRSTNET) ANTENNAS. ANY VARIATION FROM THIS DIRECTIVE SHALL REQUIRE APPROVAL FROM THE AT&T PROJECT MANAGER PRIOR TO CLOSEOUT.

NOTES 4

1. GROUNDING SHALL BE IN ACCORDANCE WITH ATT-TP-76416.
2. CONTRACTOR SHALL HAVE A COMPLETE UNDERSTANDING OF THE CONTENTS OF AT&T STANDARD TP-76416.
3. ALL INSTALLATIONS SHALL BE FIELD VERIFIED.
4. ALL GROUNDING CONDUCTORS SHALL BE #2 AWG SUNLIGHT RESISTANT-TINNED STRANDED COPPER UNLESS NOTED OTHERWISE.
5. ALL RRH4X25-B30 RRH MODELS WILL REQUIRE A #6 AWG SUNLIGHT RESISTANT-TINNED STRANDED COPPER DUE TO THE LIMITED SPACE AT THE GROUNDING TERMINATION POINT.
6. ALL 2X60W 850 & 1900 RRHS MODELS WILL REQUIRE A TOP AND BOTTOM CONNECTION.

GROUNDING NOTES 5

APPLICANT/OWNER:

AT&T MOBILITY

16025 NORTHLAND DR
SOUTHFIELD, MI 48075

PREPARED BY:

BLACK & VEATCH

6800 W. 115TH ST, SUITE 2292
OVERLAND PARK, KANSAS 66211
(913) 458-2000

PROJECT NUMBER: 129341

STATE OF MICHIGAN
PING JIANG
ENGINEER
No.
6201062190
LICENSED PROFESSIONAL ENGINEER

07/28/2021

IT IS A VIOLATION OF LAW FOR ANY PERSON, UNLESS THEY ARE ACTING UNDER THE DIRECTION OF A LICENSED PROFESSIONAL ENGINEER, TO ALTER THIS DOCUMENT.

LANDLORD/PROPERTY OWNER SIGNATURE

REV	DATE	DESCRIPTION
0	07.28.21	ISSUED FOR CONSTRUCTION

PROJECT LOCATION: USID (1835)

LIVONIA POLICE TOWER

15080 FARMINGTON ROAD
LIVONIA, MI 48154

DRAWING DESCRIPTION:

ANTENNA LAYOUTS

DRAWING NUMBER:

T-2

THIS DOCUMENT WAS PREPARED BASED ON THE INFORMATION PROVIDED TO BLACK & VEATCH. IF EXISTING CONDITIONS DO NOT REFLECT THOSE REPRESENTED, THESE CONSTRUCTION DRAWINGS ARE NO LONGER VALID.

Antenna Requirements (verify with current RFDS)

Sector	Technology	Final Antenna Configuration	Antenna	Antenna Azimuth	Number of TMAs/PLEXERS		Number of RRHs		RRH Model # (On Ground)	RRH Model #	RRH Model #	RRH Model # (On Ground)	Number of Surge Protection		Surge Protection Model #
			Final	Final	Exist.	Final	Exist.	Final	Final	Final	Final	Final	Exist.	Final	Final
A1	5G NR CBAND	NOKIA AEQK	Proposed	355°	-	-	-	-	-	-	-	-	1	1	Raycap DC6
A2	-	-	-	-	-	-	-	-			-		-	-	-
A3	LTE 1C/2C BWE/3C/4C/5C/5G NR	Commscope NNH4-65B-R6H4	Existing	-	3	3	5	4	Alcatel-Lucent RRH4x25-WCS-4R	NOKIA B14/12/29 TRIBAND RRH AHLBBA	AirScale RRH 4T4R B5 160W AHCA	AirScale DUAL RRH 4T4R B25/66 320W AHFIB	0	1	Raycap DC9
A4	-	-	-	-	-	-	-	-			-		-	-	-
B1	5G NR CBAND	NOKIA AEQK	Proposed	125°	-	-	-	-	-	-	-	-	-	-	-
B2	-	-	-	-	-	-	-	-	-	-	-	-	-	-	-
B3	LTE 1C/2C BWE/3C/4C/5C/5G NR	Commscope NNH4-65B-R6H4	Existing	-	3	3	5	4	Alcatel-Lucent RRH4x25-WCS-4R	NOKIA B14/12/29 TRIBAND RRH AHLBBA	AirScale RRH 4T4R B5 160W AHCA	AirScale DUAL RRH 4T4R B25/66 320W AHFIB	-	-	-
B4	-	-	-	-	-	-	-	-			-		-	-	-
G1	5G NR CBAND	NOKIA AEQK	Proposed	235°	-	-	-	-	-	-	-	-	-	-	-
G2	-	-	-	-	-	-	-	-	-	-	-	-	-	-	-
G3	LTE 1C/2C BWE/3C/4C/5C/5G NR	Commscope NNH4-65B-R6H4	Existing	-	3	3	5	4	Alcatel-Lucent RRH4x25-WCS-4R	NOKIA B14/12/29 TRIBAND RRH AHLBBA	AirScale RRH 4T4R B5 160W AHCA	AirScale DUAL RRH 4T4R B25/66 320W AHFIB	-	-	-
G4	-	-	-	-	-	-	-	-			-		-	-	-

FINAL ANTENNA CONFIGURATION

APPLICANT/OWNER:

AT&T MOBILITY

16025 NORTHLAND DR
SOUTHFIELD, MI 48075

PREPARED BY:

BLACK & VEATCH

6800 W. 115TH ST, SUITE 2292
OVERLAND PARK, KANSAS 66211
(913) 458-2000

PROJECT NUMBER: 129341

STATE OF MICHIGAN
PING JIANG
ENGINEER
No.
6201062190
LICENSED PROFESSIONAL ENGINEER

07/28/2021

IT IS A VIOLATION OF LAW FOR ANY PERSON, UNLESS THEY ARE ACTING UNDER THE DIRECTION OF A LICENSED PROFESSIONAL ENGINEER, TO ALTER THIS DOCUMENT.

LANDLORD/PROPERTY OWNER SIGNATURE

REV	DATE	DESCRIPTION
0	07.28.21	ISSUED FOR CONSTRUCTION

PROJECT LOCATION: USID (1835)

LIVONIA POLICE TOWER

15080 FARMINGTON ROAD
LIVONIA, MI 48154

DRAWING DESCRIPTION:

ANTENNA CONFIGURATION

DRAWING NUMBER:

T-3

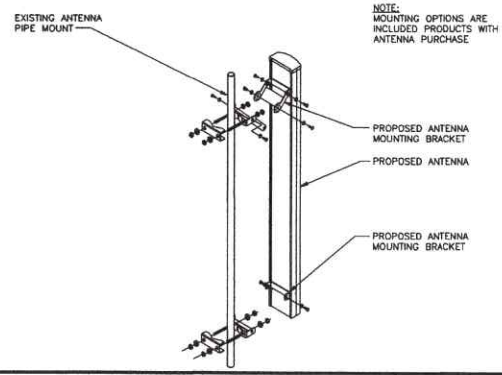

ANTENNA MOUNTING DETAIL | NO SCALE | A

AIRSCALE MAA 64T64R 192AE N77 200W AEQK

DIMENSIONS, HxWxD: 29.5"x17.7"x9.5" (749x450x241mm)

WEIGHT: 99.2 lbs (45kg)

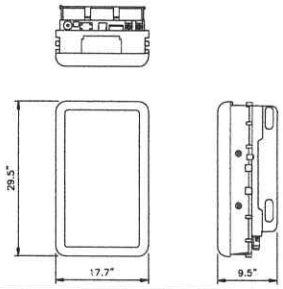

ANTENNA SPECIFICATIONS | NO SCALE | B

RAYCAP DC9-48-60-24-8C-EV

DIMENSIONS, WxDxH: 260x464x798mm (10.24"x18.28"x31.41")

TOTAL WEIGHT: 26.2 lbs

NOTE:
1. CONTRACTOR TO USE "THREAD LUBRICANT" ON MOUNTING BOLTS DURING INSTALLATION
2. RAYCAP RECOMMENDS THAT DC PROTECTION SYSTEM BE INSTALLED WITHIN 5 METERS OF THE RADIO

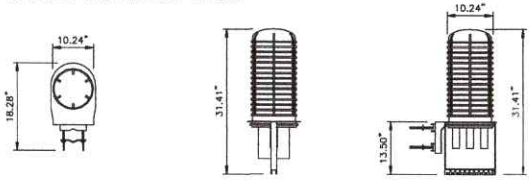

DC9 SURGE PROTECTION SPECIFICATIONS | NO SCALE | C

NOT USED | NO SCALE | D

NOT USED | NO SCALE | E

NOT USED | NO SCALE | F

NOT USED | NO SCALE | G

NOT USED | NO SCALE | H

NOT USED | NO SCALE | J

APPLICANT/OWNER:

AT&T MOBILITY

16025 NORTHLAND DR
SOUTHFIELD, MI 48075

PREPARED BY:

BLACK & VEATCH

6800 W. 115TH ST, SUITE 2292
OVERLAND PARK, KANSAS 66211
(913) 458-2000

PROJECT NUMBER: 129341

STATE OF MICHIGAN
PING JIANG
ENGINEER
No.
6201062190
LICENSED PROFESSIONAL ENGINEER

07/28/2021

IT IS A VIOLATION OF LAW FOR ANY PERSON, UNLESS THEY ARE ACTING UNDER THE DIRECTION OF A LICENSED PROFESSIONAL ENGINEER, TO ALTER THIS DOCUMENT.

LANDLORD/PROPERTY OWNER SIGNATURE

REV	DATE	DESCRIPTION
0	07.28.21	ISSUED FOR CONSTRUCTION

PROJECT LOCATION: USID (1835)

LIVONIA POLICE TOWER

15080 FARMINGTON ROAD
LIVONIA, MI 48154

DRAWING DESCRIPTION:

EQUIPMENT DETAILS

DRAWING NUMBER:

T-4

CELLULAR TOWERS
(Law Dept)
Approval of Fourth Amendment to Lease Agreement between the City of Livonia and New Cingular Wireless PCS, LLC, as Successor-in-Interest to AT&T Wireless PCS, LLC. to accommodate request to move and upgrade the equipment on the tower (CR 406-18, CR 29-12, CR 120-98 and CR 18-97)

#241-20 RESOLVED, that having considered a communication from the Department of Law, dated July 21, 2020, in connection with a proposed Fourth Amendment to Lease Agreement between the City of Livonia and New Cingular Wireless PCS, LLC, a Delaware LLC, as successor-in-interest to AT&T Wireless PCS, LLC, to which is attached a completed Exhibit E setting forth construction drawings for the proposed upgrade to be made pursuant to said lease, the Council does hereby authorize the Mayor and City Clerk, for and on behalf of the City of Livonia, to execute the proposed Fourth Amendment to Lease Agreement between the City of Livonia and New Cingular Wireless PCS, LLC, as Successor-in-Interest to AT&T Wireless PCS, LLC, subject to approval as to form by the Department of Law, and the City Clerk is hereby requested to do all things necessary or incidental to the full performance of this resolution

A roll call vote was taken on the foregoing resolutions with the following result:

AYES: Jolly, Toy, Bahr, White, McCullough, Donovic and McIntyre

NAYS: None

The President declared the resolutions adopted.

CONSENT AGENDA ITEM (Regular Meeting of August 17, 2020)

Motion by:	**Jolly**
Seconded by:	**White**
ROLL CALL:	
Ayes:	**Jolly, Toy, Bahr, White, McCullough, Donovic, McIntyre**
Nays:	**None**
Absent:	**None**

DEPARTMENT OF LAW

PAUL A. BERNIER
City Attorney

MICHAEL E. FISHER
Chief Assistant City Attorney

ERIC S. GOLDSTEIN
Assistant City Attorney

LEO D. NEVILLE
Assistant City Attorney

33000 CIVIC CENTER DRIVE
LIVONIA, MICHIGAN 48154-3097
(734) 466-2520
FAX: (734) 466-2072

MAUREEN MILLER BROSNAN
MAYOR

July 21, 2020

TO: HONORABLE MEMBERS OF THE CITY COUNCIL

FROM: DEPARTMENT OF LAW

SUBJECT: Amendment to AT&T Lease of Livonia Police Department Cell Tower Space

REF: Council Resolution Nos. 18-97, 120-98, 29-12, and 406-18

Dear Council Members:

Since 1997, a portion of the Livonia Police Department communications tower has been leased to AT&T for cellular communication services. The original lease was amended in 1998 to allow AT&T to move its antennas approximately 50 feet higher on the tower, at which time AT&T paid the City a $15,000 one-time fee for agreeing to that amendment. In 2012, AT&T's lease was amended again, allowing three more AT&T antennas in return for an additional $750 per month.

During the summer of 2017, AT&T brought forth a proposal to move and upgrade its equipment on the tower. The change was less substantial than in the previous instances, so the parties settled on a one-time payment of $10,000 by AT&T for its Third Amendment to Lease Agreement.

Now AT&T has proposed adding heavier equipment to the tower. AT&T said the market price for this addition was $7,500, and the City's consultant agreed. The consultant also observed that the new equipment would not overburden the tower.

Assuming the proposed fourth lease amendment meets with your approval – we are advised that it has already been approved by AT&T – please adopt a resolution in substantially the following form:

> RESOLVED, that having considered a communication from the Department of Law, dated July 21, 2020, in connection with a proposed Fourth Amendment to

Lease Agreement between the City of Livonia and New Cingular Wireless PCS, LLC, a Delaware LLC, as successor-in-interest to AT&T Wireless PCS, LLC, to which is attached a completed Exhibit E setting forth construction drawings for the proposed upgrade to be made pursuant to said lease, THE COUNCIL DOES HEREBY AUTHORIZE THE MAYOR AND CITY CLERK, FOR AND ON BEHALF OF THE CITY OF LIVONIA, TO EXECUTE THE PROPOSED FOURTH AMENDMENT TO LEASE AGREEMENT BETWEEN THE CITY OF LIVONIA AND NEW CINGULAR WIRELESS PCS, LLC, AS SUCCESSOR-IN-INTEREST TO AT&T WIRELESS PCS, LLC, SUBJECT TO APPROVAL AS TO FORM BY THE DEPARTMENT OF LAW, and the City Clerk is hereby requested to do all things necessary or incidental to the full performance of this resolution.

Approved for submission:

Maureen Miller Brosnan, Mayor

Very truly yours,

Michael E. Fisher, Chief Assistant City Attorney

Paul A. Bernier, City Attorney

Deputy Chief Benjamin McDermott

Michael T. Slater, Director of Finance

MEF/cd
Attachment

cc: Mayor, Clerk, Finance, Police

P:\Council\2020\AT&T Fourth Amendment to Lease.docx

FOURTH AMENDMENT TO LEASE AGREEMENT

This Fourth amendment to Lease Agreement entered into on _____, 2020, between the City of Livonia ("Landlord"), a municipal corporation, 33000 Civic Center Drive, Livonia, Michigan 41854, and New Cingular Wireless PCS, LLC, a Delaware LLC, as successor-in-interest to AT&T Wireless PCS, Inc., a Delaware corporation ("Tenant"), 1025 Lenox Park Blvd NE, 3rd Floor, Atlanta, GA 30319

WHEREAS, Landlord and Tenant entered into a Lease Agreement dated January 30, 1997 ("Lease"), and amended same on February 26, 1998 (the "First Amendment"), January 26, 2012 (the "Second Amendment") and November 11, 2018 (the "Third Amendment") and both parties now desire to amend the Lease a fourth time,

NOW THEREFORE, for and in consideration of value received and the mutual promises contained in the Lease and First, Second and Third Amendments, as well as the promises contained herein (this document being hereinafter known as the "Fourth Amendment;" the Lease and the First Amendment and Second Amendment and Third Amendment being hereafter collectively referred to as the "Lease Agreement"), Landlord and Tenant agree as follows:

1) Paragraph 1(a) shall read as follows:

1.(a) The right to use vertical space on the tower for the installation, maintenance and operation of up to twelve (12) antennae, plus provisions for Omni whips mounted at a base height of no less than 136 feet nor more than 146 feet on the Tower, with the top of the antennae to be no higher than 146 feet on the Tower, together with necessary transmission cables or lines no greater than two (2) inches in diameter. Prior to approval of the Fourth Amendment. Tenant's actual base height for equipment was no less than 136 feet on the Tower. In return for a one-time payment from Tenant

of $7,500.00, Landlord hereby approves the revision of Tenant's vertical space on the Tower to a base height of not less than 136 feet and not more than 146 feet. Detailed plans and specifications conforming to this provision are attached as Exhibit "E" and are hereby approved and accepted by Landlord. All antennae, cables or lines and related equipment installed on the Premises in accordance with this Fourth Amendment are and shall remain Tenant's personal property.

2) AT&T equipment not being used or replaced will be removed from the City of Livonia tower. Removal of obsolete equipment will be coordinated only with construction activities related to modifications of active AT&T equipment.

3) All other provisions of the Lease Agreement are to remain in full force and effect.

WITNESSES:

LANDLORD
CITY OF LIVONIA, A Michigan municipal

_____

_____

LANDLORD'S ADDRESS:

City of Livonia
33000 Civic Center Drive
Livonia, MI 48154

APPROVED

_____
Director of Finance

Date: _____

Corporation

By: _____
Maureen Miller Brosnan, Mayor

By: _____
Susan Nash, City Clerk

Date:_____

Pursuant to Council Resolution _____
Adopted on _____

APPROVED AS TO FORM:

By: _____
Department of Law

Date:_____

WITNESSES:

_____

_____

TENANT

New Cingular Wireless PCS, LLC
By: AT&T Mobility Corporation
Its: Manager

By: _____
Name: TERRY LUNDQUIST
Title: SR. REAL ESTATE & CONSTRUCTION MANAGER
Date: 7/1/2020

TENANT'S ADDRESS:

New Cingular Wireless PCS
1025 Lenox Park Blvd NE,
3rd Floor
Atlanta, GA 30319

SITE PHOTO

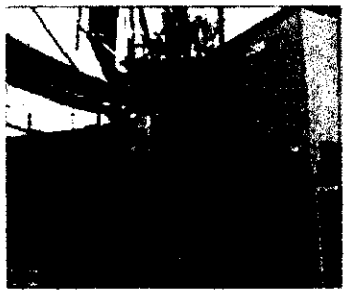

AT&T MOBILITY

PROJECT: LTE 4C/5C/5G NR RADIO
AT&T SITE ID: MI2109
AT&T FA#: 10076130

LIVONIA POLICE TOWER
LIVONIA, MI 48154

PROJECT INFORMATION

SITE ADDRESS:	[illegible] LIVONIA, MI 48154
COUNTY:	WAYNE
SITE NAME:	LIVONIA POLICE TOWER
SITE NUMBER:	MI2109
FA NUMBER:	10076130
USID NUMBER:	1835
LATITUDE:	42° 23' 37" N
LONGITUDE:	83° 22' 17" W
GROUND ELEVATION:	662' AMSL
TOWER OWNER:	CITY OF LIVONIA – –
SITE ACQUISITION MANAGER:	KRISTEN CHASE 412.269.5850
CONSTRUCTION MANAGER:	FRANK VITTO 913.458.6194
LEAD ENGINEER:	JORDAN HENRY 913.458.4293

PROJECT MANAGER:	STEPHANIE HARDWICK
PHONE:	317.462.2269
APPLICANT:	AT&T MOBILITY
CONTACT:	–
PHONE:	–

AREA MAP

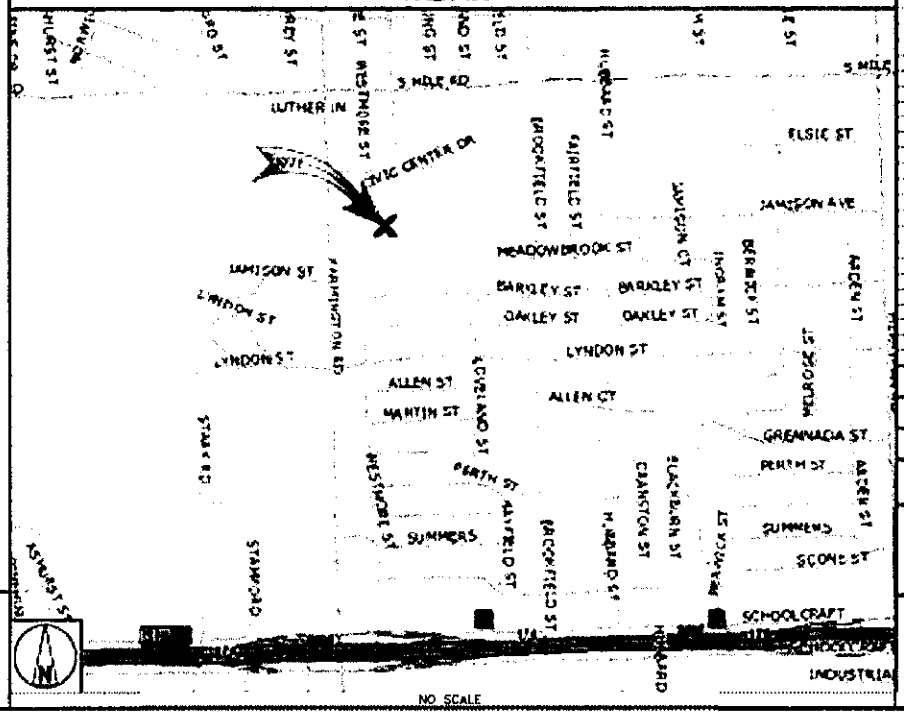

ENGINEERING

2015 MICHIGAN BUILDING CODE
2014 MICHIGAN ELECTRICAL CODE
TIA-222-G OR LATEST EDITION

DRAWING INDEX

SHEET NO:	SHEET TITLE
TITLE PAGE	TITLE PAGE
–	–
C-1	SHELTER PLAN & DC CIRCUIT SCHEDULE
C-2	EQUIPMENT DETAILS
–	–
T-1	ELEVATION
T-2	ANTENNA LAYOUTS
T-3	ANTENNA CONFIGURATION
T-4	EQUIPMENT DETAILS
T-5	STRUCTURAL NOTES
T-6	EQUIPMENT NOTES
–	–
E-1	ELECTRICAL SECTION NOTES
–	–
N-1	GENERAL NOTES
N-2	GENERAL NOTES
–	–
–	AT&T RF PLUMBING DIAGRAMS ATTACHED

REFERENCE MATERIALS

THESE LTE DRAWINGS ARE BASED ON THE AT&T RFDS DATED 01/06/2020

11"x17" PLOT WILL BE HALF SCALE UNLESS OTHERWISE NOTED

CONTRACTOR SHALL VERIFY ALL PLANS & EXISTING DIMENSIONS & CONDITIONS ON THE JOB SITE & SHALL IMMEDIATELY NOTIFY THE ENGINEER IN WRITING OF ANY DISCREPANCIES BEFORE PROCEEDING WITH THE WORK OR BE RESPONSIBLE FOR SAME

TO OBTAIN LOCATION OF PARTICIPANTS UNDERGROUND FACILITIES BEFORE YOU DIG IN MICHIGAN, CALL MISS DIG
811 OR (800) 482-7171
www.missdig.org
48 HOURS BEFORE YOU DIG

-THESE PLANS ADHERE TO ALL OF THE REQUIREMENTS CALLED OUT IN THE JURISDICTION PLANNING AND ZONING FOR ANTENNAS AND SUPPORT STRUCTURES WHERE SITE IS LOCATED.
-SUBCONTRACTOR SHALL VERIFY ALL PLANS AND EXISTING CONDITIONS ON SITE, IMMEDIATELY NOTIFY ENGINEER OF ANY DISCREPANCIES PRIOR TO PERFORMING ANY WORK OR BE RESPONSIBLE FOR THE SAME

APPLICANT/OWNER:

AT&T MOBILITY

16025 NORTHLAND DR
SOUTHFIELD, MI 48075

PREPARED BY:

BLACK & VEATCH

8800 W. 115TH ST, SUITE 2292
OVERLAND PARK, KANSAS 66211
[illegible]

PROJECT NUMBER: 129391

STATE OF MICHIGAN
PING JIANG
ENGINEER
No.
4301062193
LICENSED PROFESSIONAL ENGINEER

02/24/2020

[illegible]

LANDLORD/PROPERTY OWNER SIGNATURE

REV	DATE	DESCRIPTION
0	02.24.20	ISSUED FOR CONSTRUCTION

PROJECT LOCATION: USID (1835)

LIVONIA POLICE TOWER

15080 FARMINGTON ROAD
LIVONIA, MI 48154

DRAWING DESCRIPTION:

TITLE PAGE

DRAWING NUMBER:

TITLE PAGE

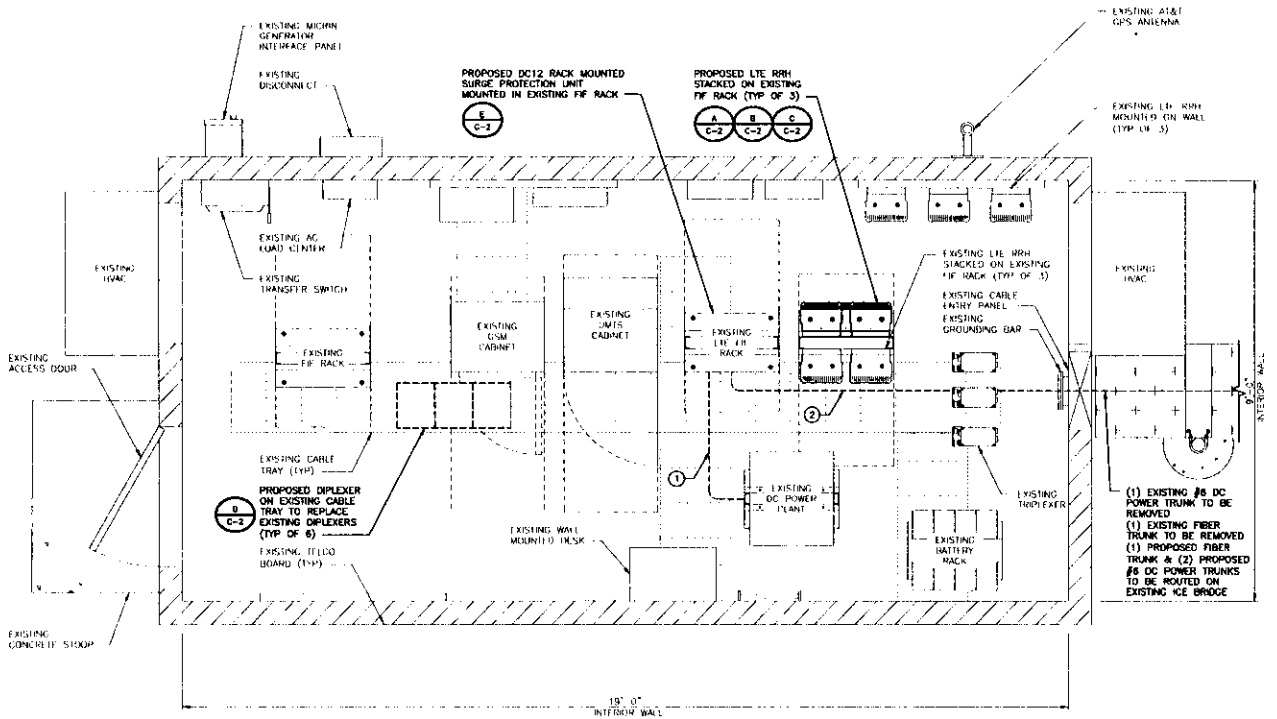

FINAL SHELTER PLAN

12" 6" 0 1' 2' 3'
3/4"=1'-0"

1

1. CONTRACTOR SHALL FIELD VERIFY ALL DIMENSIONS.
2. CONTRACTOR SHALL MAINTAIN A 10'-0" MINIMUM SEPARATION BETWEEN THE EXISTING/PROPOSED LTE GPS ANTENNA AND TRANSMITTING ANTENNAS.
3. DC POWER WIRING SHALL BE COLOR CODED AT EACH END FOR IDENTIFYING +24V AND -48V CONDUCTORS. RED MARKINGS SHALL IDENTIFY +24V AND BLUE MARKINGS SHALL IDENTIFY -48V. REFER TO ATT-002-290-701.
4. NON-LTE DC POWER WIRING SIZE 14 AWG TO 10 AWG SHALL BE TELCOFLEX III. DC POWER WIRING 8 AWG AND LARGER SHALL BE TELCOFLEX IV.
5. LTE POWER WIRING SHALL BE IN ACCORDANCE WITH ATT-002-290-531.
6. THE PROPOSED ELECTRICAL WORK FOR THE SCOPE OF THIS PROJECT IS LOW VOLTAGE DC POWER ONLY.
7. PROPOSED LTE BBU TO BE INSTALLED AND GROUNDED BY OTHERS, PER AT&T INSTALLATION STANDARDS.
8. EXISTING RACK MOUNTED DC SURGE PROTECTION UNIT SHALL BE SWAPPED OUT WITH PROPOSED RACK MOUNTED DC SURGE PROTECTION UNIT, WHEN REQUIRED FOR UPGRADE.

NOTES

NO	FROM	TO	CONFIGURATION
1	24VDC/48VDC DISTRIBUTION PANEL	RAYCAP SURGE PROTECTION DC12 (INDOOR)	(2) 1-[illegible]
2	RAYCAP SURGE PROTECTION DC12 (OUTDOOR)	RAYCAP SURGE PROTECTION DC9 (TOWER)	[illegible] TYPE [illegible]

DC CIRCUIT SCHEDULE

INSTALL:
(3) PROPOSED LTE RRHs
(6) PROPOSED DIPLEXERS
(1) PROPOSED DC12 SURGE PROTECTION UNIT

REMOVE:
(1) EXISTING #8 DC POWER TRUNK
(1) EXISTING FIBER TRUNK

SCOPE OF WORK

APPLICANT/OWNER:

AT&T MOBILITY

16025 NORTHLAND DR
SOUTHFIELD, MI 48075

PREPARED BY:

BLACK & VEATCH

6800 W. 115TH ST, SUITE 2292
OVERLAND PARK, KANSAS 66211
[illegible]

PROJECT NUMBER: 129391

STATE OF MICHIGAN
PING JIANG
ENGINEER
No
42010621930
LICENSED PROFESSIONAL ENGINEER

02/24/2020

[illegible]

[illegible]

REV	DATE	DESCRIPTION
0	02.24.20	ISSUED FOR CONSTRUCTION

PROJECT LOCATION: USID (1835)

LIVONIA POLICE TOWER

15080 FARMINGTON ROAD
LIVONIA, MI 48154

DRAWING DESCRIPTION:

OUTDOOR PLAN
& DC CIRCUIT SCHEDULE

DRAWING NUMBER:

C-1

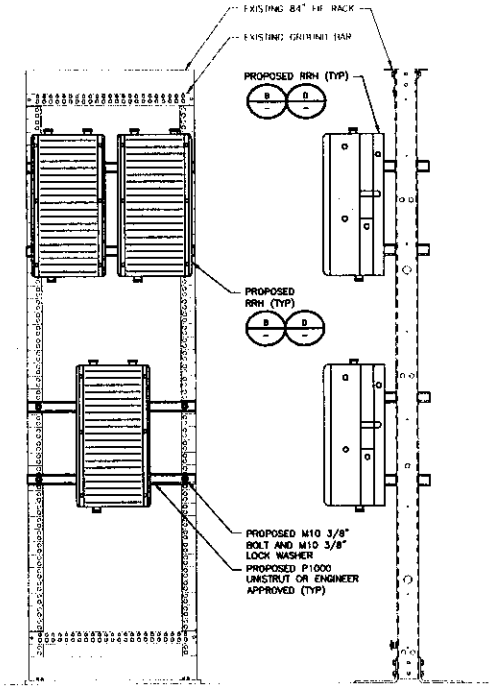

23" FIF RACK DETAIL W/ RRH's | NO SCALE | A

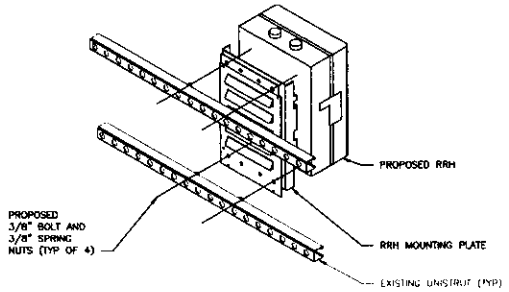

RRH BRACKET MOUNT DETAIL | NO SCALE | B

ALCATEL-LUCENT B66A RRH4x45-4R

DIMENSIONS, HxWxD: (25.8"x11.8"x7.2") 655x299x182mm

WEIGHT, WITHOUT MOUNTING KIT: (58.6 lbs.) 25.8 kg

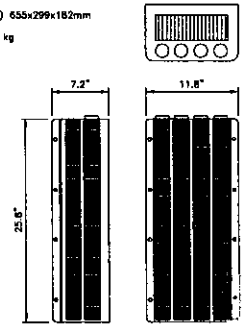

RRH SPECIFICATIONS | NO SCALE | C

COMMSCOPE CBC6192123T-DS (E11F23P05)

DIMENSIONS, HxWxD: 175x255x108mm (6.9"x10.0"x4.3")

WEIGHT (W/O MOUNTING): 17.6 lbs

CONNECTOR: 7/16 DIN FEMALE

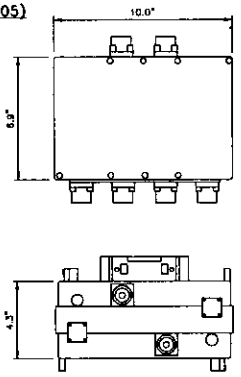

PROPOSED QUADPLEXER SPECIFICATIONS | NO SCALE | D

RAYCAP DC12-48-60-RM

DIMENSIONS, WxDxH: 483x89x392mm (19.0"x3.5"x15.4")

NOMINAL OPERATING VOLTAGE: 48 VDC

NOMINAL DISCHARGE CURRENT: 20 kA 8/20us

MAXIMUM DISCHARGE CURRENT: 60 kA 8/20us

MAXIMUM CONTINUOUS OPERATING VOLTAGE: 75 VDC

VOLTAGE PROTECTION RATING: 400 V

TOTAL WEIGHT: 27 lbs

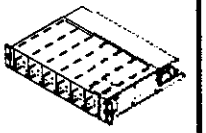

DC SURGE SUPPRESSOR DETAIL | NO SCALE | E

NOT USED | NO SCALE | F

NOT USED | NO SCALE | G

NOT USED | NO SCALE | H

APPLICANT/OWNER:

AT&T MOBILITY

16025 NORTHLAND DR
SOUTHFIELD, MI 48075

PREPARED BY:

BLACK & VEATCH

6800 W. 115TH ST, SUITE 2292
OVERLAND PARK, KANSAS 66211

PROJECT NUMBER: 129391

STATE OF MICHIGAN
PING JIANG
ENGINEER
No. 4201062190
LICENSED PROFESSIONAL ENGINEER

02/24/2020

"IT IS A VIOLATION OF LAW FOR ANY PERSON, UNLESS THEY ARE ACTING UNDER THE DIRECTION OF A LICENSED PROFESSIONAL ENGINEER, TO ALTER THIS DRAWING"

LANDLORD/PROPERTY OWNER SIGNATURE

REV	DATE	DESCRIPTION
0	02.24.20	ISSUED FOR CONSTRUCTION

PROJECT LOCATION: USID (1835)

LIVONIA POLICE TOWER

15080 FARMINGTON ROAD
LIVONIA, MI 48154

DRAWING DESCRIPTION:

EQUIPMENT DETAILS

DRAWING NUMBER:

C-2

THIS DOCUMENT WAS PREPARED BASED ON THE INFORMATION PROVIDED TO BLACK & VEATCH. IF EXISTING CONDITIONS DO NOT REFLECT THOSE REPRESENTED, THESE CONSTRUCTION DRAWINGS ARE NO LONGER VALID.

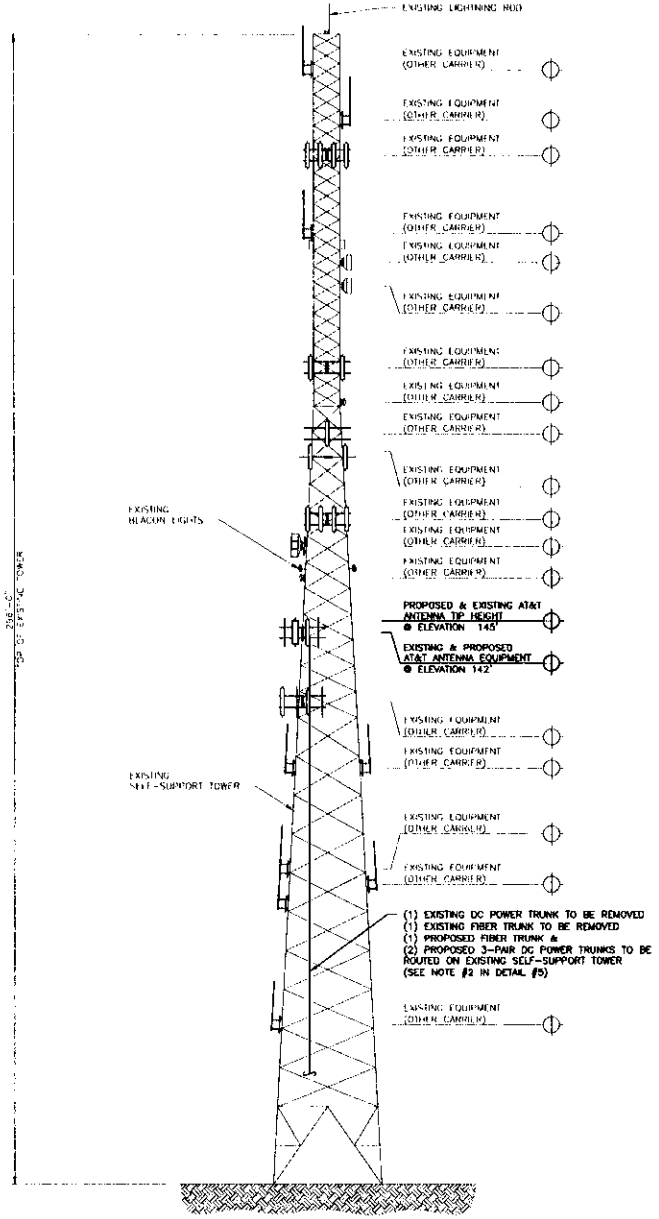

NOTES:

1. GROUND EQUIPMENT AND/OR EQUIPMENT SHELTERS OMITTED FOR CLARITY.

THE PASSING STRUCTURAL ANALYSIS FOR THE EXISTING TOWER AT THIS SITE WAS COMPLETED BY BLACK AND VEATCH ON FEBRUARY 19, 2020 CONFORMING TO TIA-222-H. ACCORDING TO THE BLACK AND VEATCH STRUCTURAL ANALYSIS, THE TOWER HAS SUFFICIENT CAPACITY TO SUPPORT THE EXISTING AND PROPOSED LOADINGS.

STRUCTURAL AND MOUNT ANALYSIS NOTE | 2

THE PASSING ANTENNA MOUNT EVALUATION LETTER FOR THE EXISTING MOUNT WAS COMPLETED BY BLACK & VEATCH ON FEBRUARY 23, 2018. THE MOUNT HAS SUFFICIENT CAPACITY FOR THE EXISTING AND PROPOSED LOADING OBSERVED ON THESE CONSTRUCTION DRAWINGS, ASSUMING THAT ALL ANTENNAS ARE MOUNTED AT THE MOUNT CENTERLINE AND ALL PROPOSED [illegible] ARE 3" STANDARD (3.6" O.D.).

MOUNT ANALYSIS NOTE | 3

INSTALL:

(3) PROPOSED LTE ANTENNAS
(9) PROPOSED RRHs
(3) PROPOSED DIPLEXERS
(1) PROPOSED 18-PAIR FIBER TRUNK
(2) PROPOSED #8 DC POWER TRUNKS

REMOVE:

(3) EXISTING LTE ANTENNAS
(3) EXISTING RRHs
(1) EXISTING #8 DC POWER TRUNK
(1) EXISTING 12-PAIR FIBER TRUNK

SCOPE OF WORK | 4

1. WHEN STACKING CABLES 3 OR MORE DEEP, USE STACKABLE SNAP-INS, TALLEY PART NUMBER SSH-158-3 (OR ENGINEER APPROVED EQUAL).
2. CONTRACTOR SHALL CONFIRM THE FINAL CABLE ROUTING PLAN WITH THE STRUCTURAL ANALYSIS.

FINAL TOWER ELEVATION

16' 12' 8' 4' 0 16' 32'
1/16"=1'-0"

1

NOTES | 5

APPLICANT/OWNER:

AT&T MOBILITY

16025 NORTHLAND DR
SOUTHFIELD, MI 48075

PREPARED BY:

BLACK & VEATCH

6800 W. 115TH ST, SUITE 2292
OVERLAND PARK, KANSAS 66211

PROJECT NUMBER: 129391

STATE OF MICHIGAN
PING JIANG
ENGINEER
No. 6201062190
LICENSED PROFESSIONAL ENGINEER

02/24/2020

LANDLORD/PROPERTY OWNER SIGNATURE

REV	DATE	DESCRIPTION
D	02.24.20	ISSUED FOR CONSTRUCTION

PROJECT LOCATION: USID (1835)

LIVONIA POLICE TOWER

15080 FARMINGTON ROAD
LIVONIA, MI 48154

DRAWING DESCRIPTION:

ELEVATION

DRAWING NUMBER:

T-1

THIS DOCUMENT WAS PREPARED BASED ON THE INFORMATION PROVIDED TO BLACK & VEATCH. IF EXISTING CONDITIONS DO NOT REFLECT THOSE REPRESENTED, THESE CONSTRUCTION DRAWINGS ARE NO LONGER VALID.

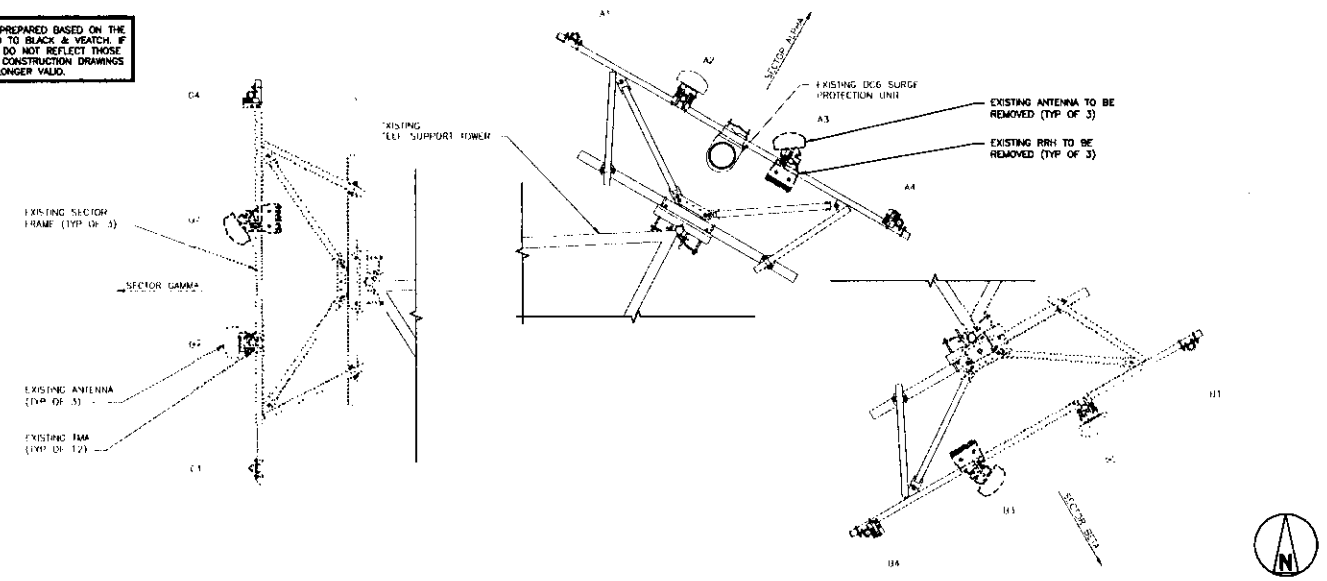

EXISTING ANTENNA LAYOUT | 12" 6" 0 1' 2' 3' 4' 5' 1/2"=1'-0" | 1

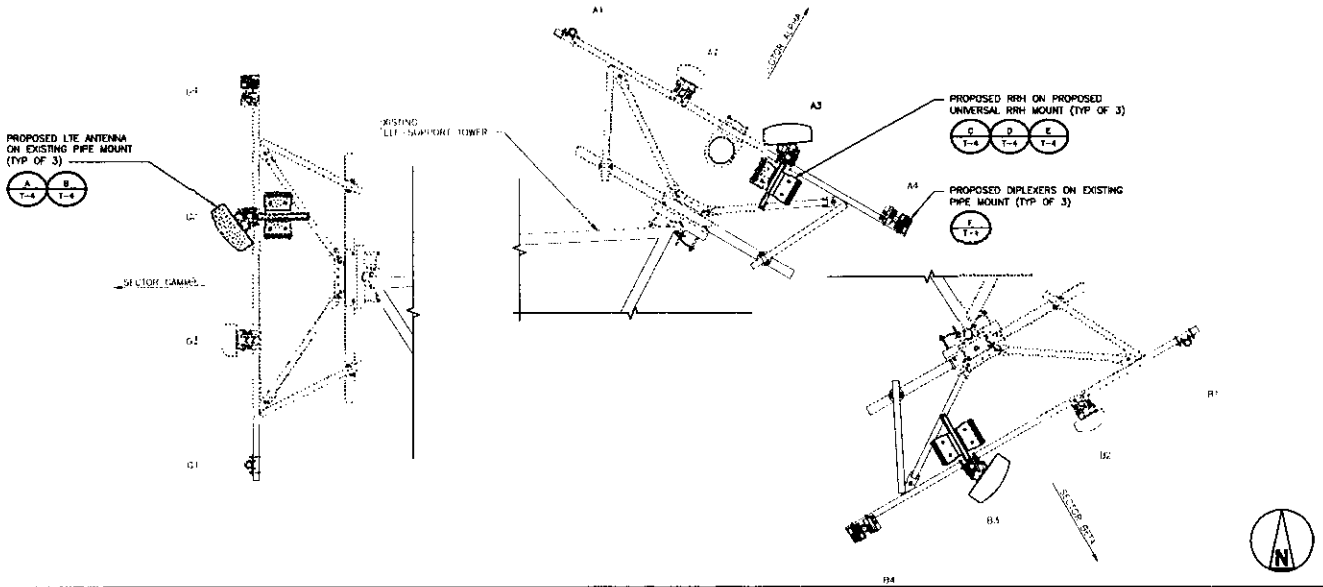

FINAL ANTENNA LAYOUT | 12" 6" 0 1' 2' 3' 4' 5' 1/2"=1'-0" | 2

THE PASSING ANTENNA MOUNT EVALUATION LETTER FOR THE EXISTING MOUNT WAS COMPLETED BY BLACK & VEATCH ON FEBRUARY 23, 2018. THE MOUNT HAS SUFFICIENT CAPACITY FOR THE EXISTING AND PROPOSED LOADING OBSERVED ON THESE CONSTRUCTION DRAWINGS, ASSUMING THAT ALL ANTENNAS ARE MOUNTED AT THE MOUNT CENTERLINE AND ALL PROPOSED MOUNTING PIPES ARE 3" STANDARD (3.5" O.D.).

MOUNT ANALYSIS NOTE | 3

1. CONTRACTOR SHALL REFER TO THE LATEST RFDS PRIOR TO THE CONSTRUCTION COMMENCING.
2. BLACK AND VEATCH RECOMMENDS EQUAL HORIZONTAL SPACING OF ANTENNAS TO ENSURE ADEQUATE WEIGHT DISTRIBUTION.
3. CONTRACTOR SHALL ENSURE 3'-0" MINIMUM SPACING BETWEEN LTE 700 B17 AND LTE 700 B14 (FIRSTNET) ANTENNAS. ANY VARIATIONS FROM THIS DIRECTIVE SHALL REQUIRE APPROVAL FROM THE AT&T PROJECT MANAGER PRIOR TO CLOSEOUT.

NOTES | 4

1. GROUNDING SHALL BE IN ACCORDANCE WITH ATT-TP-78416.
2. CONTRACTOR SHALL HAVE A COMPLETE UNDERSTANDING OF THE CONTENTS OF ATT STANDARD TP-76416.
3. ALL INSTALLATIONS SHALL BE FIELD VERIFIED.
4. ALL GROUNDING CONDUCTORS SHALL BE #2 AWG SUNLIGHT RESISTANT-TINNED STRANDED COPPER UNLESS NOTED OTHERWISE.
5. ALL RRH4X25-B30 RRH MODELS WILL REQUIRE A #6 AWG SUNLIGHT RESISTANT-TINNED STRANDED COPPER DUE TO THE LIMITED SPACE AT THE GROUNDING TERMINATION POINT.
6. ALL 2X80W 850 & 1900 RRHS MODELS WILL REQUIRE A TOP AND BOTTOM CONNECTION.

GROUNDING NOTES | 5

APPLICANT/OWNER:

AT&T MOBILITY

16025 NORTHLAND DR
SOUTHFIELD, MI 48075

PREPARED BY:

BLACK & VEATCH

6800 W. 115TH ST, SUITE 2292
OVERLAND PARK, KANSAS 66211

PROJECT NUMBER: 129391

STATE OF MICHIGAN
PING JIANG
ENGINEER
No. 6701062190
LICENSED PROFESSIONAL ENGINEER

02/24/2020

LANDLORD "RECEIPT" OWNER SIGNATURE

REV	DATE	DESCRIPTION
0	02.24.20	ISSUED FOR CONSTRUCTION

PROJECT LOCATION: USID (1835)

LIVONIA POLICE TOWER

15080 FARMINGTON ROAD
LIVONIA, MI 48154

DRAWING DESCRIPTION:

ANTENNA LAYOUTS

DRAWING NUMBER:

T-2

THIS DOCUMENT WAS PREPARED BASED ON THE INFORMATION PROVIDED TO BLACK & VEATCH. IF EXISTING CONDITIONS DO NOT REFLECT THOSE REPRESENTED, THESE CONSTRUCTION DRAWINGS ARE NO LONGER VALID.

Antenna Requirements (verify with current RFDS)

Sector	Technology	Final Antenna Configuration	Antenna	Antenna Azimuth	Number of TMAs		Number of RRHs		RRH Model #	RRH Model #	RRH Model #	RRH Model # (On Ground)	RRH Model # (On Ground)	Number of Surge Protection		Surge Protection Model #
			Final	Final	Exist.	Final	Exist.	Final	Final	Final	Final	Final	Final	Exist.	Final	Final
A1	-	-		-	-	-	-	-	-	-	-	-	-	-	-	
A2	UMTS	Powerwave RA21.7752.00	Existing	-	2	2	-	-	-	-	-	-	-	1	1	Raycap DCA
A3	LTE 1C/2C BWE/3C/4C/5C/5G NR Radio	Commscope NNH4-65B-R6H4	Proposed	355°	1	1	3	5	Alcatel-Lucent B25 RRH4x30-4R	Alcatel-Lucent RRH4x25-WCS-4R	NOKIA B14/12/29 TRIBAND RRH AHLBBA	AirScale RRH 4T4R B5 160W AHCA	Alcatel-Lucent B66A RRH4X45-4R	-	-	
A4		-	-	-	1	2	-	-	-	-	-	-	-	-	-	
B1	-	-	-	-	-	-	-	-	-	-	-	-	-	-	-	
B2	UMTS	Powerwave RA21.7752.00	Existing	-	2	2	-	-	-	-	-	-	-	-	-	
B3	LTE 1C/2C BWE/3C/4C/5C/5G NR Radio	Commscope NNH4-65B-R6H4	Proposed	125°	-	-	3	5	Alcatel-Lucent B25 RRH4x30-4R	Alcatel-Lucent RRH4x25-WCS-4R	NOKIA B14/12/29 TRIBAND RRH AHLBBA	AirScale RRH 4T4R B5 160W AHCA	Alcatel-Lucent B66A RRH4X45-4R	-	-	
B4	-	-	-	-	1	1	-	-	-	-	-	-	-	-	-	-
G1	-	-	-	-	-	-	-	-	-	-	-	-	-	-	-	-
G2	UMTS	Powerwave RA21.7752.00	Existing	-	2	2	-	-	-	-	-	-	-	-	-	-
G3	LTE 1C/2C BWE/3C/4C/5C/5G NR Radio	Commscope NNH4-65B-R6H4	Proposed	235°	-	-	3	5	Alcatel-Lucent B25 RRH4x30-4R	Alcatel-Lucent RRH4x25-WCS-4R	NOKIA B14/12/29 TRIBAND RRH AHLBBA	AirScale RRH 4T4R B5 160W AHCA	Alcatel-Lucent B66A RRH4X45-4R	-	-	-
G4	-	-	-	-	1	1	-	-	-	-	-	-	-	-	-	-

FINAL ANTENNA CONFIGURATION

APPLICANT/OWNER:

AT&T MOBILITY

16025 NORTHLAND DR
SOUTHFIELD, MI 48075

PREPARED BY:

BLACK & VEATCH

6800 W. 115TH ST, SUITE 2292
OVERLAND PARK, KANSAS 66211

PROJECT NUMBER: 129391

STATE OF MICHIGAN
PING JIANG
ENGINEER
No. 6201062193
LICENSED PROFESSIONAL ENGINEER

02/24/2020

LANDLORD/PROPERTY OWNER SIGNATURE

REV	DATE	DESCRIPTION
0	02.24.20	ISSUED FOR CONSTRUCTION

PROJECT LOCATION: USID (1835)

LIVONIA POLICE TOWER

15080 FARMINGTON ROAD
LIVONIA, MI 48154

DRAWING DESCRIPTION:

ANTENNA CONFIGURATION

DRAWING NUMBER:

T-3

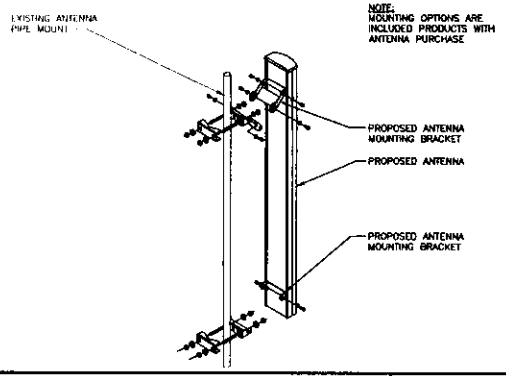

ANTENNA MOUNTING DETAIL | NO SCALE | A

ANDREW NNH4-65B-R6H4

RADOME MATERIAL:	FIBERGLASS, UV RESISTANT
RADOME COLOR:	LIGHT GRAY
DIMENSIONS, HxWxD:	1828x498x197mm (72.0"x19.6"x7.8")
WEIGHT:	59.7 lbs
WIND LOAD: (FRONTAL)	1138.0 N @ 150km/h 255.8 lbf @ 150km/h
CONNECTOR:	4.3-10 FEMALE

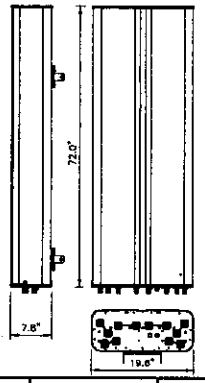

ANTENNA SPECIFICATIONS | NO SCALE | B

COMMSCOPE MTC3326DHD

NOTE:
P100 UNISTRUT TO BE INSTALLED WITH TYPICAL BOLTING HARDWARE WHEN REQUIRED FOR MOUNTING RRHs ONLY.

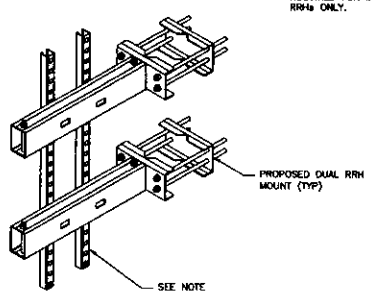

DUAL RRH MOUNTING DETAIL | NO SCALE | C

AIRSCALE RRH 4T4R B5 160W AHCA

DIMENSIONS, HxWxD:	13.3"x11.6"x8.5" (337x295x165mm)
WEIGHT:	36.8 lbs (16.7kg)

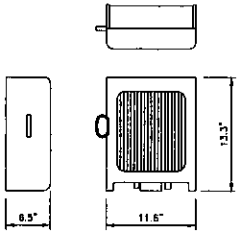

RRH SPECIFICATIONS | NO SCALE | D

NOKIA RRH B14/12/29 AHLBBA

DIMENSIONS, HxWxD:	24"x14.9"x12.7" (610x358x189mm)
WEIGHT:	101.4 lbs (46kg)

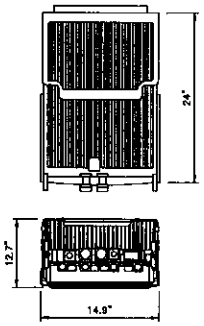

RRH SPECIFICATIONS | NO SCALE | E

KAELUS DBCT108F1V92-1

DIMENSIONS, HxDxW:	272x172x89mm (10.71"x6.77"x3.52")
BANDWIDTH:	555-798 MHz, 824-894 MHz
WEIGHT:	6.3kg (13.9 lbs)
RF CONNECTORS:	DIN 4.3-10 (F) x 8 LONG NECK

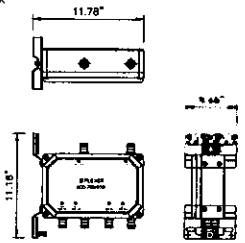

DIPLEXER SPECIFICATIONS | NO SCALE | F

NOT USED | NO SCALE | G

NOT USED | NO SCALE | H

NOT USED | NO SCALE | J

APPLICANT/OWNER:

AT&T MOBILITY

16025 NORTHLAND DR
SOUTHFIELD, MI 48075

PREPARED BY:

BLACK & VEATCH

6800 W. 115TH ST, SUITE 2292
OVERLAND PARK, KANSAS 66211

PROJECT NUMBER: 129391

STATE OF MICHIGAN
PING JIANG
ENGINEER
No. 4201042190
LICENSED PROFESSIONAL ENGINEER

02/24/2020

LANDLORD/PROPERTY OWNER SIGNATURE

REV	DATE	DESCRIPTION
0	02.24.20	ISSUED FOR CONSTRUCTION

PROJECT LOCATION: USID (1835)

LIVONIA POLICE TOWER

15080 FARMINGTON ROAD
LIVONIA, MI 48154

DRAWING DESCRIPTION:

EQUIPMENT DETAILS

DRAWING NUMBER:

T-4

CELLULAR TOWERS
(Law Dept)
Approval of Third Amendment to Lease Agreement with New Cingular Wireless, PCS, Inc. d/b/a AT&T Wireless PCS, LLC to accommodate request to move and upgrade the equipment on the tower. (CR 29-12, CR 120-98 and CR 18-97)

#406-18 RESOLVED, that having considered a communication from the Department of Law, dated October 15, 2018, in connection with a proposed Third Amendment to Lease Agreement between the City of Livonia and New Cingular Wireless PCS, Inc. d/b/a AT&T Wireless PCS, LLC, to which is attached a completed Exhibit E setting forth construction drawings for the proposed upgrade to be made pursuant to said lease, the Council does hereby authorize the Mayor and City Clerk, for and on behalf of the City of Livonia, to execute the proposed third amendment to lease agreement between the City of Livonia and New Cingular Wireless PCS, LLC, as Successor-in-Interest to AT&T Wireless PCS, Inc., subject to approval as to form by the Department of Law, and the City Clerk is hereby requested to do all things necessary or incidental to the full performance of this resolution.

A roll call vote was taken on the foregoing resolutions with the following results:

AYES: Jolly, Kritzman, Bahr, White, McIntyre, Meakin and Toy

NAYS: None

The President declared the resolutions adopted.

CONSENT AGENDA ITEMS (Regular Meeting of November 19, 2018)

Motion by: ***Jolly***
Seconded by: ***Bahr***

ROLL CALL:
Ayes: ***Jolly, Kritzman, Bahr, White, McIntyre, Meakin, and Toy***

Nays: ***None***
Absent: ***None***

CITY OF LIVONIA – CITY COUNCIL
MINUTES OF STUDY MEETING HELD NOVEMBER 7, 2018

Meeting was called to order at 9:26 p.m. by President Toy. Present:, Brian Meakin, Jim Jolly, Brandon Kritzman, Scott Bahr, Cathy White, Kathleen McIntyre, and Laura Toy. Absent: None.

Vice President Jim Jolly led the meeting in the Invocation.

Elected and appointed officials present: Mark Taormina, Director of Planning and Economic Development; Todd Zilincik, City Engineer; Paul Bernier, City Attorney; Denise Maier, Director of Human Resources; Doug Moore, Superintendent of Public Service; and Mayor Dennis Wright.

23. REQUEST TO APPROVE THIRD AMENDMENT TO LEASE AGREEMENT BETWEEN THE CITY OF LIVONIA AND NEW CINGULAR WIRELESS PCS, INC., d/b/a AT&T WIRELESS PCS, LLC: Department of Law, re: to accommodate request to move and upgrade the equipment on the tower. (CR 29-12; CR 120-98; CR 18-97)

Paul Bernier, City Attorney, presented this request to Council. He stated this is found money, they are redoing some of the cellular towers on the Police tower and paying the City money for it.

Bahr offered an approving resolution for the Consent Agenda.

DIRECTION: APPROVING CONSENT

DEPARTMENT OF LAW

PAUL A. BERNIER
City Attorney

MICHAEL E. FISHER
Chief Assistant City Attorney

ERIC S. GOLDSTEIN
Assistant City Attorney

LEO D. NEVILLE
Assistant City Attorney

33000 CIVIC CENTER DRIVE
LIVONIA, MICHIGAN 48154-3097
(734) 466-2520
FAX: (734) 466-2072

DENNIS K. WRIGHT
MAYOR

October 15, 2018

TO: HONORABLE MEMBERS OF THE CITY COUNCIL

FROM: DEPARTMENT OF LAW

SUBJECT: Amendment to AT&T Lease of Livonia Police Department Cell Tower Space

REF: Council Resolution Nos. 18-97, 120-98 and 29-12

Dear Council Members:

Since 1997, a portion of the Livonia Police Department communications tower has been leased to AT&T for cellular communication services. The original lease was amended in 1998 to allow AT&T to move its antennas approximately 50 feet higher on the tower, at which time AT&T paid the City a $15,000 one-time fee for agreeing to that amendment. In 2012, AT&T's lease was amended again, allowing three more AT&T antennas in return for an additional $750 per month.

During the summer of 2017, AT&T brought forth a proposal to move and upgrade its equipment on the tower. The change appears less substantial than in the previous instances, so the parties settled on a one-time payment of $10,000 by AT&T for this Third Amendment to Lease Agreement.

Assuming the proposed lease amendment meets with your approval – we are advised that it has already been approved by AT&T – please adopt a resolution in substantially the following form:

> RESOLVED, that having considered a communication from the Department of Law, dated October 15, 2018, in connection with a proposed Third Amendment to Lease Agreement between the City of Livonia and New Cingular Wireless PCS, Inc. d/b/a AT&T Wireless PCS, LLC, to which is attached a completed Exhibit E setting forth construction drawings for the proposed upgrade to be made pursuant to said lease, THE COUNCIL DOES HEREBY AUTHORIZE

THE MAYOR AND CITY CLERK, FOR AND ON BEHALF OF THE CITY OF LIVONIA, TO EXECUTE THE PROPOSED THIRD AMENDMENT TO LEASE AGREEMENT BETWEEN THE CITY OF LIVONIA AND NEW CINGULAR WIRELESS PCS, LLC, AS SUCCESSOR-IN-INTEREST TO AT&T WIRELESS PCS, INC., SUBJECT TO APPROVAL AS TO FORM BY THE DEPARTMENT OF LAW, and the City Clerk is hereby requested to do all things necessary or incidental to the full performance of this resolution.

Approved for submission:

Very truly yours,

Dennis K. Wright, Mayor

Michael E. Fisher, Chief Assistant City Attorney

Paul A. Bernier, City Attorney

Deputy Chief Benjamin McDermott

Michael T. Slater, Director of Finance

MEF/bks
Attachment

cc: Mayor, Clerk, Finance, Police

P:\Council - Adobe\2018\AT&T Third Amendment to Lease.docx

THIRD AMENDMENT TO LEASE AGREEMENT

This third amendment to Lease Agreement entered into on _____, 2018, between the City of Livonia ("Landlord"), a municipal corporation, 33000 Civic Center Drive, Livonia, Michigan 41854, and New Cingular Wireless PCS, LLC, a Delaware LLC, as successor-in-interest to AT & T Wireless PCS, Inc., a Delaware corporation ("Tenant"), 575 Morosgo Drive, Atlanta, GA 30324.

WHEREAS, Landlord and Tenant entered into a Lease Agreement dated January 30, 1997 ("Lease"), and amended same on February 26, 1998 (the "First Amendment") and January 26, 2012 (the "Second Amendment"), and both parties now desire to amend the Lease a third time,

NOW THEREFORE, for and in consideration of value received and the mutual promises contained in the Lease and First and Second Amendments, as well as the promises contained herein (this document being hereinafter known as the "Third Amendment;" the Lease and the First Amendment and Second Amendment being hereafter collectively referred to as the "Lease Agreement"), Landlord and Tenant agree as follows:

1) Paragraph 1(a) shall read as follows:

   1.(a) The right to use vertical space on the tower for the installation, maintenance and operation of up to twelve (12) antennae, plus provisions for Omni whips mounted at a base height of no less than 136 feet nor more than 146 feet on the Tower, with the top of the antennae to be no higher than 146 feet on the Tower, together with necessary transmission cables or lines no greater than two (2) inches in diameter. Prior to approval of the Third Amendment,

Tenant's actual base height for equipment was no less than 136 feet on the Tower. In return for a one-time payment from Tenant of $10,000.00, Landlord hereby approves the revision of Tenant's vertical space on the Tower to a base height of not less than 136 feet and not more than 146 feet, provided that there shall be no increase on the overall load on the tower. Detailed plans and specifications conforming to this provision are attached as Exhibit "E" and are hereby approved and accepted by Landlord. All antennae, cables or lines and related equipment installed on the Premises in accordance with this Lease are and shall remain Tenant's personal property.

2) All other provisions of the Lease Agreement are to remain in full force and effect.

LANDLORD

WITNESSES:

CITY OF LIVONIA, a Michigan municipal Corporation

_____

By: _____
Dennis K. Wright, Mayor

_____

By: _____
Susan Nash, City Clerk

Date: _____

LANDLORD'S ADDRESS:

Pursuant to Council Resolution _____
Adopted on _____

City of Livonia
33000 Civic Center Drive
Livonia, MI 48154

APPROVED AS TO FORM:

By: _____
Department of Law

Date: _____

Date: _____

TENANT

WITNESSES:

New Cingular Wireless PCS, LLC
By: AT&T Mobility Corporation
Its: Manager

By: _____
Name: Terry Lundquist
Title: Sr. Tech Project Manager
Date: 10/12/10

Sandy Hampshire
_____

TENANT'S ADDRESS:

New Cingular Wireless PCS
575 Morosgo Drive
Atlanta, GA 30324

P:\Agreements\towers\New Cingular Wireless.doc

THIS DOCUMENT WAS PREPARED BASED ON THE INFORMATION PROVIDED TO BLACK & VEATCH. IF EXISTING CONDITIONS DO NOT REFLECT THOSE REPRESENTED, THESE CONSTRUCTION DRAWINGS ARE NO LONGER VALID.

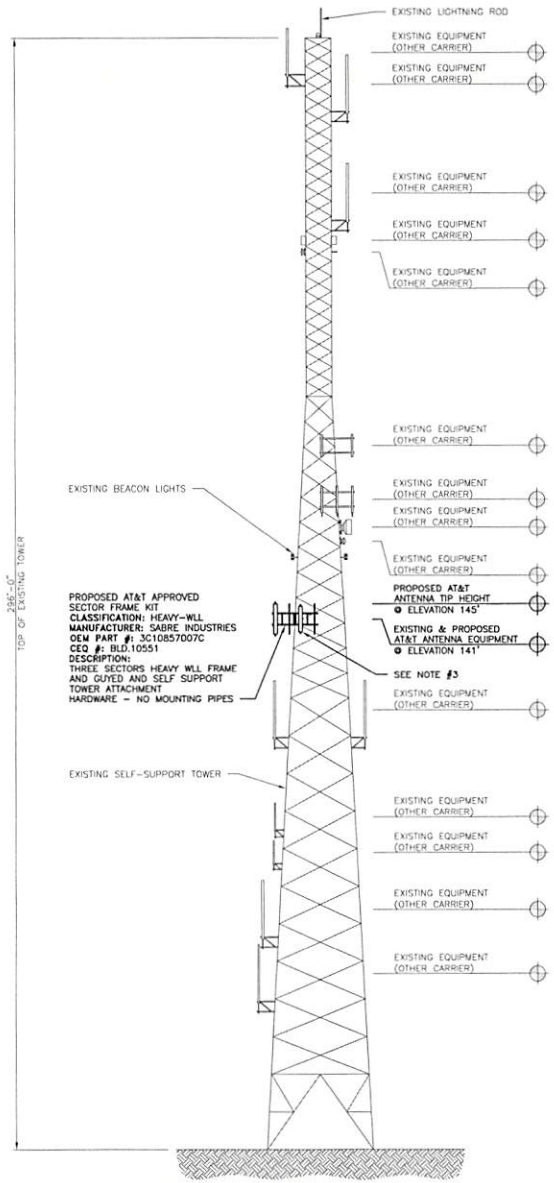

NOTES:

1. GROUND EQUIPMENT AND/OR EQUIPMENT SHELTERS OMITTED FOR CLARITY.
2. STRUCTURAL RAD CENTER IS 141'.
3. CONSTRUCTION MUST CENTER ANTENNAS ON THE MOUNT CENTERLINE AS SHOWN IN THE ELEVATION VIEW REGARDLESS OF NOTED RAD CENTER

THE PASSING STRUCTURAL ANALYSIS FOR THE EXISTING TOWER AT THIS SITE WAS COMPLETED BY B+T GROUP ON FEBRUARY 1, 2018 CONFORMING TO TIA-222-G. ACCORDING TO THE B+T GROUP STRUCTURAL ANALYSIS, THE TOWER HAS SUFFICIENT CAPACITY.

STRUCTURAL ANALYSIS NOTE 2

MOUNT REPLACEMENT WITH SABRE 3C10857007C HEAVY-WLL SECTOR FRAME KIT REQUIRED; SEE B+T GROUP ANTENNA MOUNT EVALUATION LETTER DATED FEBRUARY 23, 2018. NO PROPOSED LTE WORK SHALL COMMENCE ON THIS TOWER UNTIL AFTER MOUNT REPLACEMENT HAS BEEN COMPLETED AND PROPERLY INSPECTED.

MOUNT ANALYSIS NOTE 3

INSTALL:
(3) PROPOSED LTE ANTENNAS
(3) PROPOSED TMAs
(1) PROPOSED SECTOR FRAME KIT

REMOVE:
(3) EXISTING LTE ANTENNAS
(6) EXISTING LTE TMAs
(6) EXISTING UMTS TMAs
(3) EXISTING SECTOR FRAMES

SCOPE OF WORK 4

1. WHEN STACKING CABLES 3 OR MORE DEEP, USE STACKABLE SNAP-INS, TALLEY PART NUMBER SSH-158-3 (OR ENGINEER APPROVED EQUAL).
2. CONTRACTOR SHALL CONFIRM THE FINAL CABLE ROUTING PLAN WITH THE STRUCTURAL ANALYSIS.

NOTES 5

FINAL TOWER ELEVATION

16' 12' 8' 4' 0 16' 32'
1/16"=1'-0"

1

APPLICANT/OWNER:
AT&T MOBILITY
16025 NORTHLAND DR
SOUTHFIELD, MI 48075

PREPARED BY:
BLACK & VEATCH
6800 W. 115TH ST, SUITE 2292
OVERLAND PARK, KANSAS 66211
(913) 458-2000
PROJECT NUMBER: 129056

STATE OF MICHIGAN
PING JIANG
ENGINEER
No.
6201062190
LICENSED PROFESSIONAL ENGINEER
03/06/2018

IT IS A VIOLATION OF LAW FOR ANY PERSON, UNLESS THEY ARE ACTING UNDER THE DIRECTION OF A LICENSED PROFESSIONAL ENGINEER, TO ALTER THIS DOCUMENT.

LANDLORD/PROPERTY OWNER SIGNATURE

REV	DATE	DESCRIPTION
0	03.06.18	ISSUED FOR CONSTRUCTION

PROJECT LOCATION: USID (1835)
LIVONIA POLICE TOWER
15080 FARMINGTON ROAD
LIVONIA, MI 48154

DRAWING DESCRIPTION:
ELEVATION

DRAWING NUMBER:
T-1

THIS DOCUMENT WAS PREPARED BASED ON THE INFORMATION PROVIDED TO BLACK & VEATCH. IF EXISTING CONDITIONS DO NOT REFLECT THOSE REPRESENTED, THESE CONSTRUCTION DRAWINGS ARE NO LONGER VALID.

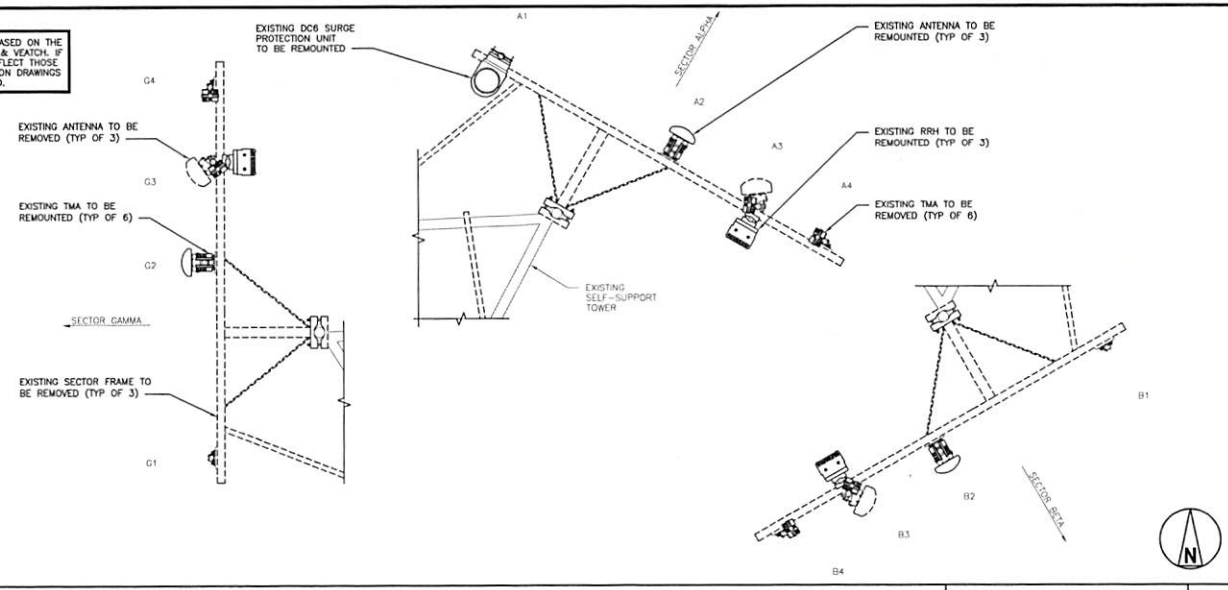

EXISTING ANTENNA LAYOUT

1/2"=1'-0"

1

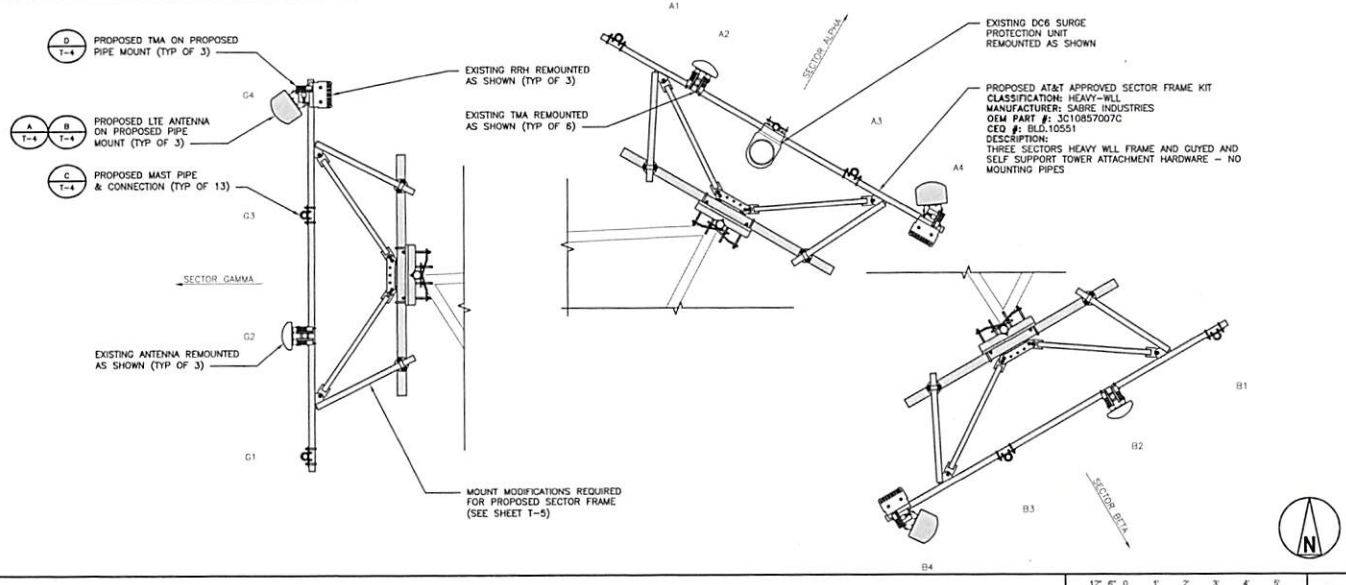

FINAL ANTENNA LAYOUT

1/2"=1'-0"

2

MOUNT REPLACEMENT WITH SABRE 3C10857007C HEAVY-WLL SECTOR FRAME KIT REQUIRED; SEE B+T GROUP ANTENNA MOUNT EVALUATION LETTER DATED FEBRUARY 23, 2018. NO PROPOSED LTE WORK SHALL COMMENCE ON THIS TOWER UNTIL AFTER MOUNT REPLACEMENT HAS BEEN COMPLETED AND PROPERLY INSPECTED.

MOUNT ANALYSIS NOTE

3

1. CONTRACTOR SHALL REFER TO THE LATEST RFDS PRIOR TO THE CONSTRUCTION COMMENCING.
2. BLACK AND VEATCH RECOMMENDS EQUAL HORIZONTAL SPACING OF ANTENNAS TO ENSURE ADEQUATE WEIGHT DISTRIBUTION.
3. CONTRACTOR SHALL ENSURE 3'-0" MINIMUM SPACING BETWEEN LTE 700 B17 AND LTE 700 B14 (FIRSTNET) ANTENNAS. ANY VARIATION FROM THIS DIRECTIVE SHALL REQUIRE APPROVAL FROM THE AT&T PROJECT MANAGER PRIOR TO CLOSEOUT

NOTES

4

1. GROUNDING SHALL BE IN ACCORDANCE WITH ATT-TP-76416.
2. CONTRACTOR SHALL HAVE A COMPLETE UNDERSTANDING OF THE CONTENTS OF AT&T STANDARD TP-76416.
3. ALL INSTALLATIONS SHALL BE FIELD VERIFIED.
4. ALL GROUNDING CONDUCTORS SHALL BE #2 AWG SUNLIGHT RESISTANT-TINNED STRANDED COPPER UNLESS NOTED OTHERWISE.
5. ALL RRH4X25-B30 RRH MODELS WILL REQUIRE A #6 AWG SUNLIGHT RESISTANT-TINNED STRANDED COPPER DUE TO THE LIMITED SPACE AT THE GROUNDING TERMINATION POINT.
6. ALL 2X60W 850 & 1900 RRHS MODELS WILL REQUIRE A TOP AND BOTTOM CONNECTION.

GROUNDING NOTES

5

APPLICANT/OWNER:

AT&T MOBILITY

16025 NORTHLAND DR
SOUTHFIELD, MI 48075

PREPARED BY:

BLACK & VEATCH

6800 W. 115TH ST, SUITE 2292
OVERLAND PARK, KANSAS 66211
(913) 458-2000

PROJECT NUMBER: 129056

STATE OF MICHIGAN
PING JIANG
ENGINEER
No.
6201062190
LICENSED PROFESSIONAL ENGINEER

03/06/2018

IT IS A VIOLATION OF LAW FOR ANY PERSON, UNLESS THEY ARE ACTING UNDER THE DIRECTION OF A LICENSED PROFESSIONAL ENGINEER, TO ALTER THIS DOCUMENT.

LANDLORD/PROPERTY OWNER SIGNATURE

REV	DATE	DESCRIPTION
0	03.06.18	ISSUED FOR CONSTRUCTION

PROJECT LOCATION: USID (1835)

LIVONIA POLICE TOWER

15080 FARMINGTON ROAD
LIVONIA, MI 48154

DRAWING DESCRIPTION:

ANTENNA LAYOUTS

DRAWING NUMBER:

T-2

THIS DOCUMENT WAS PREPARED BASED ON THE INFORMATION PROVIDED TO BLACK & VEATCH. IF EXISTING CONDITIONS DO NOT REFLECT THOSE REPRESENTED, THESE CONSTRUCTION DRAWINGS ARE NO LONGER VALID.

Antenna Requirements (verify with current RFDS)

Sector	Technology	Final Antenna Configuration	Antenna	Antenna Azimuth	Number of TMAs		Number of RRHs		RRH Model #	RRH Model # (On Ground)	RRH Model # (On Ground)	Number of Surge Protection		Surge Protection Model #
			Final	Final	Exist.	Final	Exist.	Final	Final	Final	Final	Exist.	Final	Final
A1	-	-	-	-	-	-	-	-	-	-	-	-	-	-
A2	UMTS	Powerwave RA21.7752.00	Existing	-	2	2	-	-	-	-	-	1	1	Raycap DC6
A3	-	-	-	-	-	-	-	-	-	-	-	-	-	-
A4	LTE 1C/2C BWE/3C	KMW EPBQ-652L8H8	Proposed	355°	2	1	2	3	Alcatel-Lucent RRH2x40W-07L	Alcatel-Lucent B25 RRH4x30-4R	Alcatel-Lucent RRH4x25-WCS-4R	-	-	-
B1	-	-	-	-	-	-	-	-	-	-	-	-	-	-
B2	UMTS	Powerwave RA21.7752.00	Existing	-	2	2	-	-	-	-	-	-	-	-
B3	-	-	-	-	-	-	-	-	-	-	-	-	-	-
B4	LTE 1C/2C BWE/3C	KMW EPBQ-652L8H8	Proposed	125°	2	1	2	3	Alcatel-Lucent RRH2x40W-07L	Alcatel-Lucent B25 RRH4x30-4R	Alcatel-Lucent RRH4x25-WCS-4R	-	-	-
G1	-	-	-	-	-	-	-	-	-	-	-	-	-	-
G2	UMTS	Powerwave RA21.7752.00	Existing	-	2	2	-	-	-	-	-	-	-	-
G3	-	-	-	-	-	-	-	-	-	-	-	-	-	-
G4	LTE 1C/2C BWE/3C	KMW EPBQ-652L8H8	Proposed	235°	2	1	2	3	Alcatel-Lucent RRH2x40W-07L	Alcatel-Lucent B25 RRH4x30-4R	Alcatel-Lucent RRH4x25-WCS-4R	-	-	-

FINAL ANTENNA CONFIGURATION

APPLICANT/OWNER:

AT&T MOBILITY

16025 NORTHLAND DR
SOUTHFIELD, MI 48075

PREPARED BY:

BLACK & VEATCH

6800 W. 115TH ST, SUITE 2292
OVERLAND PARK, KANSAS 66211
(913) 458-2000

PROJECT NUMBER: 129056

STATE OF MICHIGAN
PING JIANG
ENGINEER
No.
6201062190
LICENSED PROFESSIONAL ENGINEER

03/06/2018

IT IS A VIOLATION OF LAW FOR ANY PERSON, UNLESS THEY ARE ACTING UNDER THE DIRECTION OF A LICENSED PROFESSIONAL ENGINEER, TO ALTER THIS DOCUMENT.

LANDLORD/PROPERTY OWNER SIGNATURE

REV	DATE	DESCRIPTION
0	03.06.18	ISSUED FOR CONSTRUCTION

PROJECT LOCATION: USID (1835)

LIVONIA POLICE TOWER

15080 FARMINGTON ROAD
LIVONIA, MI 48154

DRAWING DESCRIPTION:

ANTENNA CONFIGURATION

DRAWING NUMBER:

T-3

CELLULAR TOWERS
Approval of proposed Second Amendment to Lease Agreement between the City of Livonia and New Cingular Wireless PCS, Inc., d/b/a AT&T Wireless Services to place three additional antennas on the existing Livonia Police Department Cell Tower for a five year period, with four additional five-year renewal periods. (CR 18-97 and CR 120-98)

#29-12 RESOLVED, that having considered a communication from the Department of Law, dated January 11, 2012, which is approved for submission by the Mayor, to which is attached a proposed Second Amendment to Lease Agreement between the City of Livonia and New Cingular Wireless PCS, Inc., d/b/a AT&T Wireless Services, which includes a completed Exhibit D setting forth rents to be paid pursuant to said lease, the Council does hereby authorize the Mayor and City Clerk, for and on behalf of the City of Livonia, to execute the proposed Second Amendment to Lease Agreement between the City of Livonia and New Cingular Wireless PCS, LLC, as successor-in-interest to AT&T Wireless PCS, Inc., for a five-year period, with four additional five-year renewal periods, and payable upon the terms and conditions detailed in the proposed agreement and the attached Exhibit D, and subject to approval as to form by the Department of Law, and the City Clerk is hereby requested to do all things necessary or incidental to the full performance of this resolution.

JAN 25 2012

A roll call vote was taken on the foregoing resolutions with the following result:

AYES: Brosnan, Kritzman, McCann, Laura, Robinson, and Pastor.
NAYS: None.

CONSENT AGENDA ITEMS (Regular Meeting of January 25, 2012)

Motion by: ***Robinson***
Seconded by: ***Brosnan***

ROLL CALL:
Ayes: ***Brosnan, Kritzman, McCann, Laura, Robinson, and Pastor***

Nays: ***None***
Absent: ***Toy***

CITY OF LIVONIA – CITY COUNCIL
MINUTES OF STUDY MEETING HELD JANUARY 18, 2012

Meeting was called to order at 8:00 p.m. Present: Maureen Miller Brosnan, Brandon Kritzman, James McCann, Joe Laura, Tom Robinson and John Pastor. Absent: Laura Toy.

Elected and appointed officials present: Todd Zilincik, City Engineer; Mark Taormina, Director of Planning and Economic Development; Don Knapp, City Attorney; Terry Marecki, City Clerk; Kevin Maillard, Director of Public Services; Dan Putman, Director of Information Services; Jim Inglis, Executive Director of Housing; Dave Varga, Director of Administrative Services; and Jack E. Kirksey, Mayor.

13. REQUEST TO APPROVE SECOND AMENDMENT TO LEASE AGREEMENT BETWEEN THE CITY OF LIVONIA AND WIRELESS PCS, INC. (D/B/A AT&T WIRELESS SERVICES): Department of Law, re: to accommodate AT&T's request to place an additional three (3) antennas on the existing Livonia Police Department Cell Tower for a five (5) year period, with four (4) additional five (5) year renewal periods. (CR 18-97 and 120-98)

Don Knapp, City Attorney, said this initially came to them when AT&T announced that they were going to be adding 3 antennas to the Police Tower. The City informed AT&T that their original lease allowed for 9 antennas which were already placed on the tower and that if they wished to place 3 additional antennas that they would have an amendment to their lease. Both parties hashed out an agreement pursuant to which AT&T will pay an additional $750 per month for the three antennas, subject to the same 4 percent annual escalation as the underlying rent. The initial annual rental rate under the new lease will be $52,223. Assuming the proposed lease amendment meets the approval of the Council, the City has been advised that it has already been approved by AT&T and it requested that Council adopt a resolution.

McCann offered the approving resolution for the Consent Agenda.

DIRECTION: APPROVING CONSENT

DEPARTMENT OF LAW

DONALD L. KNAPP, JR.
City Attorney

CATHRYN K. WHITE
Chief Assistant City Attorney

MICHAEL E. FISHER
Assistant City Attorney

BARBARA J. SCHERR
Assistant City Attorney

33000 CIVIC CENTER DRIVE
LIVONIA, MICHIGAN 48154-3097
(734) 466-2520
FAX: (734) 421-4870

JACK E. KIRKSEY

MAYOR

January 11, 2012

TO: HONORABLE MEMBERS OF THE CITY COUNCIL

FROM: DEPARTMENT OF LAW

SUBJECT: Amendment to AT&T Lease of Livonia Police Department Cell Tower Space

REF: Council Resolution Nos. 18-97 and120-98

Dear Council Members:

Since 1997, a portion of the Livonia Police Department communications tower has been leased to AT&T for cellular communication services. The original lease was amended in 1998 to allow AT&T to move its antennas approximately 50 feet higher on the tower, at which time AT&T paid the City a $15,000 one-time fee for agreeing to that amendment.

Earlier this year, AT&T announced its intention to put three additional antennas on the tower, and was advised that the maximum number of antennas permitted under AT&T's lease, i.e., nine, was already in place on the tower, so the additional three antennas would need an additional amendment to the original lease. At length, the two sides hashed out an agreement pursuant to which AT&T will pay an additional $750 per month for the three antennas, subject to the same 4 percent annual escalation as the underlying rent. The initial annual rental rate under the new lease will be $52,223.

Assuming the proposed lease amendment meets with your approval – we are advised that it has already been approved by AT&T – please adopt a resolution in substantially the following form:

> RESOLVED, that having considered a communication from the Department of Law, dated December 7, 2011, in connection with a proposed Second

Amendment to Lease Agreement between the City of Livonia and Wireless PCS, Inc. d/b/a AT&T Wireless Services, to which is attached a completed Exhibit D setting forth rents to be paid pursuant to said lease, THE COUNCIL DOES HEREBY AUTHORIZE THE MAYOR AND CITY CLERK, FOR AND ON BEHALF OF THE CITY OF LIVONIA, TO EXECUTE THE PROPOSED SECOND AMENDMENT TO LEASE AGREEMENT BETWEEN THE CITY OF LIVONIA AND NEW CINGULAR WIRELESS PCS, LLC, AS SUCCESSOR-IN-INTEREST TO AT&T WIRELESS PCS, INC., FOR A FIVE-YEAR PERIOD, WITH FOUR ADDITIONAL FIVE-YEAR RENEWAL PERIODS, AND PAYABLE UPON THE TERMS AND CONDITIONS DETAILED IN THE PROPOSED AGREEMENT AND THE ATTACHED EXHIBIT D, AND SUBJECT TO APPROVAL AS TO FORM BY THE DEPARTMENT OF LAW, and the City Clerk is hereby requested to do all things necessary or incidental to the full performance of this resolution.

Approved for submission:

_____
Jack E. Kirksey, Mayor

Very truly yours,

_____
Michael E. Fisher, Assistant City Attorney

_____
Donald L. Knapp, Jr., City Attorney

_____
Lt. Gregory Winn

MEF/bks

Attachment

cc: Mayor, Clerk, Council, Finance, Police

P:\Council\2011\amend ATT.doc

SECOND AMENDMENT TO LEASE AGREEMENT

This Second Amendment to Lease Agreement entered into on _____, 2011, between the City of Livonia ("Landlord"), a municipal corporation, 33000 Civic Center Drive, Livonia, Michigan 48154, and New Cingular Wireless PCS, LLC, as successor-in-interest to AT&T Wireless PCS, Inc., a Delaware corporation, ("Tenant"), 12555 Cingular Way, Suite 1300, Alpharetta, GA 30004.

WHEREAS, Landlord and Tenant entered into a Lease Agreement dated January 30, 1997 ("Original Lease"), as amended by an Amendment to Lease Agreement dated February 26, 1998 (the "First Amendment"; the Original Lease and the First Amendment are collectively referred to as the "Lease"), and both parties now desire to amend the Lease a second time,

NOW THEREFORE, for and in consideration of value received and the mutual promises contained in the Lease, as well as the promises contained herein (this document being hereinafter known as the "Second Amendment"), Landlord and Tenant agree as follows:

1) Paragraph 1(a) shall read as follows:

1.(a) The right to use vertical space on the tower for the installation, maintenance and operation of up to twelve (12) antennae, plus provisions for Omni whips mounted at a base height of no less than 145 feet nor more than 155 feet on the Tower, with the top of the antennae to be no higher than 155 feet on the Tower, together with necessary transmission cables or lines no greater than two (2) inches in diameter. Detailed plans and specifications conforming to this provision are attached as Exhibit "C" and are hereby approved and accepted by Landlord. All antennae, cables or lines and related equipment installed on

the Premises in accordance with this Lease are and shall remain Tenant's personal property.

2) A new paragraph 1(f) shall be added to read as follows:

1.(f) Recognizing the limited remaining capacity of the Tower, Tenant agrees to immediately remove any antennae, whips, cables, lines or other equipment from the Premises which become unused and/or obsolete.

3) Paragraph 2(b) shall read as follows:

2.(b) Provided Tenant is not in default, the term of this Lease may be extended for up to four (4) additional and separate five (5) year terms, commencing November 1, 2011. Landlord shall have the right, in its sole discretion, to terminate this Lease at the conclusion of the first of these five (5) year terms or at the conclusion of any additional five (5) year extension by giving written notice to Tenant at least ninety (90) days prior to the end of the initial term or any extension thereof. If Landlord does not exercise its right to terminate this Lease at the conclusion of the initial term or any extension(s) thereof, the term of this Lease shall be automatically extended as provided herein unless Tenant gives Landlord written notice of intention to terminate at least six (6) months prior to the end of each current term.

4) Paragraph 3(a) shall read as follows:

3.(a) The annual rental for the year running from November 1, 2011 to October 31, 2012, shall be Fifty Two Thousand Two Hundred Twenty Three Dollars ($52,223.00), with the annual rental for each subsequent year of the initial and

extension terms to be increased by Four percent (4%), as set forth on Exhibit "D." The attached Exhibit D replaces and supersedes all previous rent schedules.

5) Tenant's Notice Address in Section 19 of the Lease is hereby deleted in its entirety and replaced with the following:

As to Tenant: New Cingular Wireless PCS, LLC
Attn: Network Real Estate Administration
Re: Cell Site #: MI2109; Cell Site Name: Livonia Police Tower (MI)
Fixed Asset No: 10076130
12555 Cingular Way, Suite 1300
Alpharetta, GA 30004

With a copy to: New Cingular Wireless PCS, LLC
Attn: AT&T Legal Department
Re: Cell Site #: MI2109; Cell Site Name: Livonia Police Tower (MI)
Fixed Asset No: 10076130
15 East Midland Avenue
Paramus, NJ 07652

6) All other provisions of the Lease are to remain in full force and effect.

Date: _____ LANDLORD

WITNESSES:

CITY OF LIVONIA, a Municipal Corporation and Body Politic

_____

By: _____
Jack E. Kirksey, Mayor

And

_____

By: _____
Terry A. Marecki, City Clerk

LANDLORD'S ADDRESS:

City of Livonia
33000 Civic Center Drive
Livonia, MI 48154

Pursuant to Council Resolution _____
Adopted on _____

APPROVED AS TO FORM:

By: _____
Department of Law

Date: _____

Date: _____

TENANT

WITNESSES:

New Cingular Wireless PCS, LLC
By: AT&T Mobility Corporation
Its: Manager

_____

By: _____
Mark Caesar

_____

Its: Real Estate and Construction Manager, MI/IN

p\agreements\towers\ATT Lease Amendment
9/7/2011

EXHIBIT C

LTE UPGRADE BY GOODMAN NETWORKS
SITE #: MI2109
SITE NAME: LIVONIA POLICE TOWER
AT&T FA #: 10076130
15080 FARMINGTON ROAD
LIVONIA, MI 48154

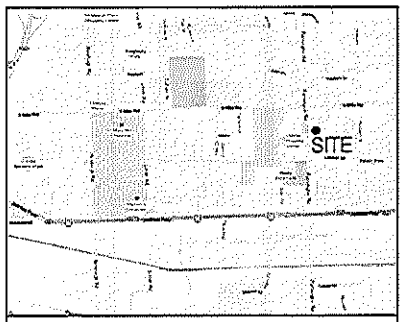

AREA MAP

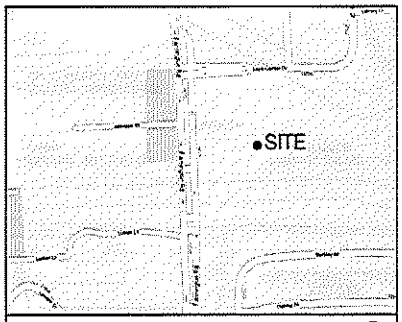

LOCATION MAP

SITE NAME:		LIVONIA POLICE TOWER
SITE NUMBER:		MI2109
SITE ADDRESS:		15080 FARMINGTON ROAD LIVONIA, MI 48154 WAYNE COUNTY
LANDLORD:	NAME	AT&T
	ADDRESS	12555 CINGULAR WAY
	CITY, ST	ALPHARETTA, GA 30004
	TELEPHONE	(678)-887-4223
APPLICANT:	NAME	AT&T MOBILITY
	ADDRESS	32255 NORTHWESTERN HIGHWAY
	CITY, ST	FARMINGTON HILLS, MI 48332
	TELEPHONE	(800)-632-2822

PROJECT SUMMARY

SHT NO.	DESCRIPTION
T-1	TITLE SHEET
C-1	SITE PLAN
C-2	EQUIPMENT PLANS
C-3	TOWER ELEVATIONS
C-4	DETAILS
A-1	ANTENNA SCHEDULE AND AZIMUTHS
A-2	COAX DIAGRAM (SECTOR 1)
A-3	COAX DIAGRAM (SECTORS 2 & 3)
A-4	COAX AND WAVEBRIDGE DETAILS
E-1	ELECTRICAL & GROUNDING PLANS, ONE LINE DIAG.
E-2	GROUNDING SCHEMATIC
E-3	GROUNDING DETAILS AND ELECTRICAL NOTES

DRAWING INDEX

LATITUDE: 42° 23' 37.00" N (42.39361°)
LONGITUDE: 83° 22' 17.00" W (-83.37139°)

1. HEAD WEST ON I-696 W
2. TAKE EXIT 1 TO MERGE ONTO I-275 S/I-96 E TOWARD TOLEDO
3. EXIT ONTO SCHOOLCRAFT
4. TURN LEFT AT FARMINGTON RD
5. END AT 15080 FARMINGTON ROAD, LIVONIA, MI 48154

DIRECTIONS TO SITE

AT&T TO ADD (3) NEW ANTENNAS, (6) RRHS, (4) DEMARCATION BOXES, (1) FIBER FEED, (2) DC FEEDS, AND GROUND EQUIPMENT (INSIDE SHELTER) TO AN EXISTING TELECOMMUNICATIONS FACILITY.

NOTE:
ALL ELECTRICAL WORK IS LOW VOLTAGE DC.

PROJECT DESCRIPTION

at&t

Goodman Networks
Network. Knowledge ... Delivered.

CHRISTOPHER WZACNY AND ASSOCIATES INC.
30150 TELEGRAPH ROAD, SUITE 114
BINGHAM FARMS, MI 48025
TEL: (248) 723-6516
FAX: (248) 723-4910

REFER TO GRAPHIC SCALE FOR 11"x17" DRAWINGS

MI2109
SITE NAME: LIVONIA POLICE TOWER
AT&T FA #: 10076130

15080 FARMINGTON ROAD
LIVONIA
MI 48154
WAYNE COUNTY

REVISIONS

REV	DATE	DESCRIPTION	BY
2	09AUG11	REVISIONS	RD
1	26JUL11	RF REVISIONS	NA
0	28APR11	FINAL CDS	JD
B	18APR11	REVISIONS	AP
A	12MAR11	PRELIM CDS 90%	AP

STATE OF MICHIGAN
PETER LICHOMSKI
ARCHITECT
No. 43776
LICENSED ARCHITECT

IT IS A VIOLATION OF LAW FOR ANY PERSON, UNLESS THEY ARE ACTING UNDER THE DIRECTION OF THIS LICENSED PROFESSIONAL ARCHITECT, TO ALTER THIS DOCUMENT.

SHEET TITLE:
TITLE SHEET

PROJECT NO.:
MI2109

SHEET NUMBER:
T-1

DO NOT SCALE DRAWINGS

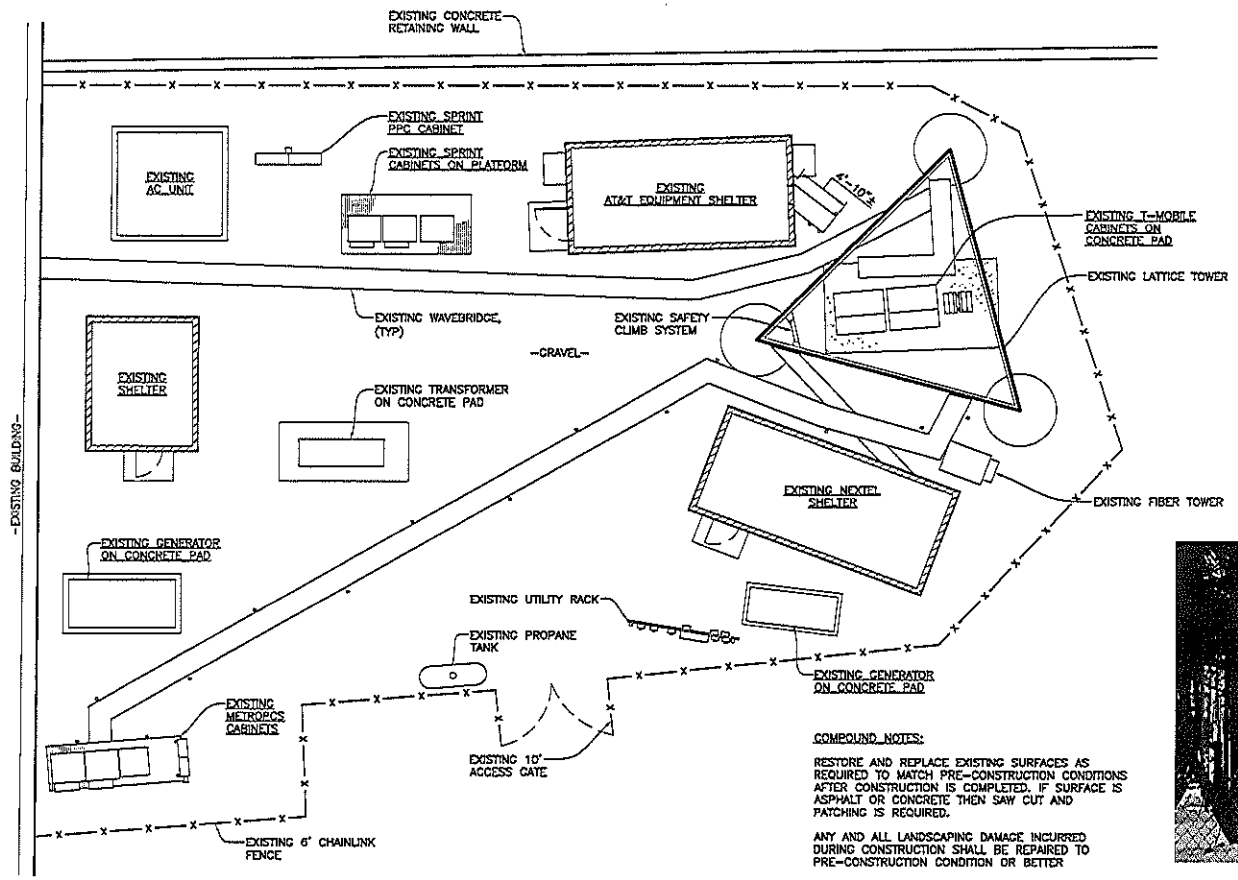

COMPOUND NOTES:

RESTORE AND REPLACE EXISTING SURFACES AS REQUIRED TO MATCH PRE-CONSTRUCTION CONDITIONS AFTER CONSTRUCTION IS COMPLETED. IF SURFACE IS ASPHALT OR CONCRETE THEN SAW CUT AND PATCHING IS REQUIRED.

ANY AND ALL LANDSCAPING DAMAGE INCURRED DURING CONSTRUCTION SHALL BE REPAIRED TO PRE-CONSTRUCTION CONDITION OR BETTER

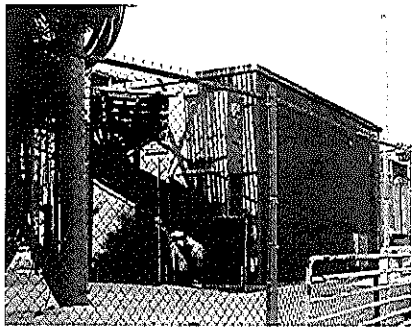

1 C-1 SITE PLAN
SCALE 3/16"=1'-0"
REFER TO GRAPHIC SCALE FOR 11"x17" DRAWINGS

0" 2'-8" 5'-4" 10'-8" 16'

72 HOURS (3 WORKING DAYS) EXCEPT WEEKENDS & HOLIDAYS
BEFORE YOU DIG CALL MISS DIG
800-482-7171 (TOLL FREE)

2 C-1 EXISTING EQUIPMENT PHOTO
N.T.S.

at&t

Goodman Networks
Network Knowledge ... Delivered.

CHRISTOPHER WZACNY AND ASSOCIATES INC.
30150 TELEGRAPH ROAD, SUITE 114
BINGHAM FARMS, MI 48025
TEL: (248) 723-6516
FAX: (248) 723-1010

REFER TO GRAPHIC SCALE FOR 11"x17" DRAWINGS

MI2109
SITE NAME: LIVONIA POLICE TOWER
AT&T FA #: 10076130

15000 FARMINGTON ROAD
LIVONIA
MI 48154
WAYNE COUNTY

REVISIONS

REV	DATE	DESCRIPTION	BY
2	09AUG11	REVISIONS	RD
1	26JUL11	RF REVISIONS	NA
0	26APR11	FINAL CDS	JS
G	18APR11	REVISIONS	AF
A	12MAR11	PRELIM CDS 90%	AF

IT IS A VIOLATION OF LAW FOR ANY PERSON, UNLESS THEY ARE ACTING UNDER THE DIRECTION OF THIS LICENSED PROFESSIONAL ARCHITECT, TO ALTER THIS DOCUMENT.

SHEET TITLE
SITE PLAN

PROJECT NO.:
MI2109

SHEET NUMBER:
C-1

DO NOT SCALE DRAWINGS

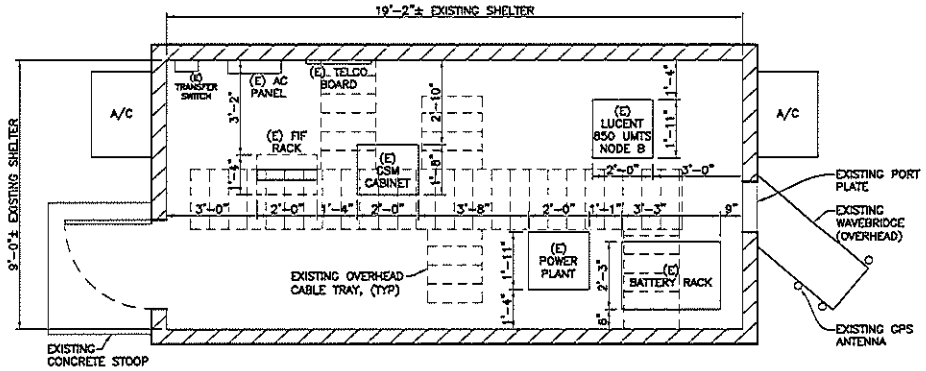

2 C-2 EXISTING EQUIPMENT PLAN
SCALE 1/2"=1'-0"
REFER TO GRAPHIC SCALE FOR 11"x17" DRAWINGS

0' 1' 2' 4' 6'

NEW EQUIPMENT LEGEND

1. PROPOSED TASK BAND UNIT AND SURGE PROTECTION ON NEW FIF RACK
2. 18"X18"X4" RGS EXTERIOR EXCESS FIBER CABLE ENCLOSURE MOUNTED ON WAVEBRIDGE POST) MODEL: FB-12-4BOX CBD 10606 VENDOR: ROSENBERGER SITE SOLUTIONS
3. PROPOSED GPS ANTENNA MOUNTED ON WAVEBRIDGE, MAXIMUM CABLE RUN TO BE UNDER 30'-0"

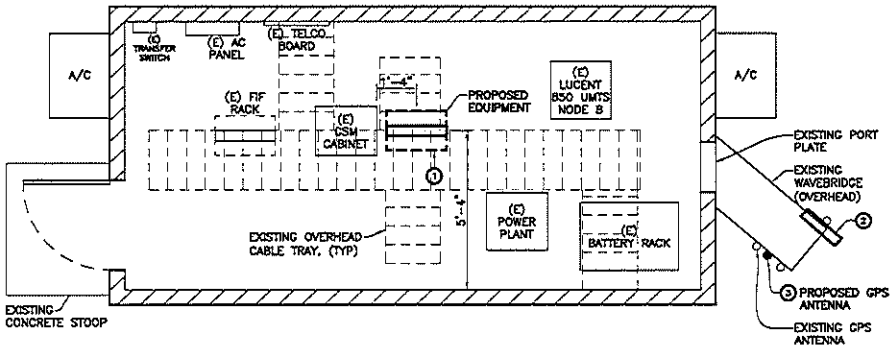

1 C-2 PROPOSED EQUIPMENT PLAN
SCALE 1/2"=1'-0"
REFER TO GRAPHIC SCALE FOR 11"x17" DRAWINGS

0' 1' 2' 4' 6'

at&t

Goodman Networks
Network Knowledge ... Delivered.

CHRISTOPHER WZACNY AND ASSOCIATES INC.
30150 TELEGRAPH ROAD, SUITE 114
BINGHAM FARMS, MI 48025
TEL: (248) 723-8516
FAX: (248) 723-4610

REFER TO GRAPHIC SCALE FOR 11"x17" DRAWINGS

MI2109
SITE NAME: LIVONIA POLICE TOWER
AT&T FA #: 10076130

15080 FARMINGTON ROAD
LIVONIA
MI 48154
WAYNE COUNTY

REVISIONS

REV	DATE	DESCRIPTION	BY
2	08AUG11	REVISIONS	HO
1	25JUL11	RF REVISIONS	NA
0	28APR11	FINAL CDS	JS
B	18APR11	REVISIONS	AP
A	13MAR11	PRELIM CDS 90%	AP

IT IS A VIOLATION OF LAW FOR ANY PERSON, UNLESS THEY ARE ACTING UNDER THE DIRECTION OF THIS LICENSED PROFESSIONAL ARCHITECT, TO ALTER THIS DOCUMENT.

SHEET TITLE
EQUIPMENT PLANS

PROJECT NO.
MI2109

SHEET NUMBER
C-2

DO NOT SCALE DRAWINGS

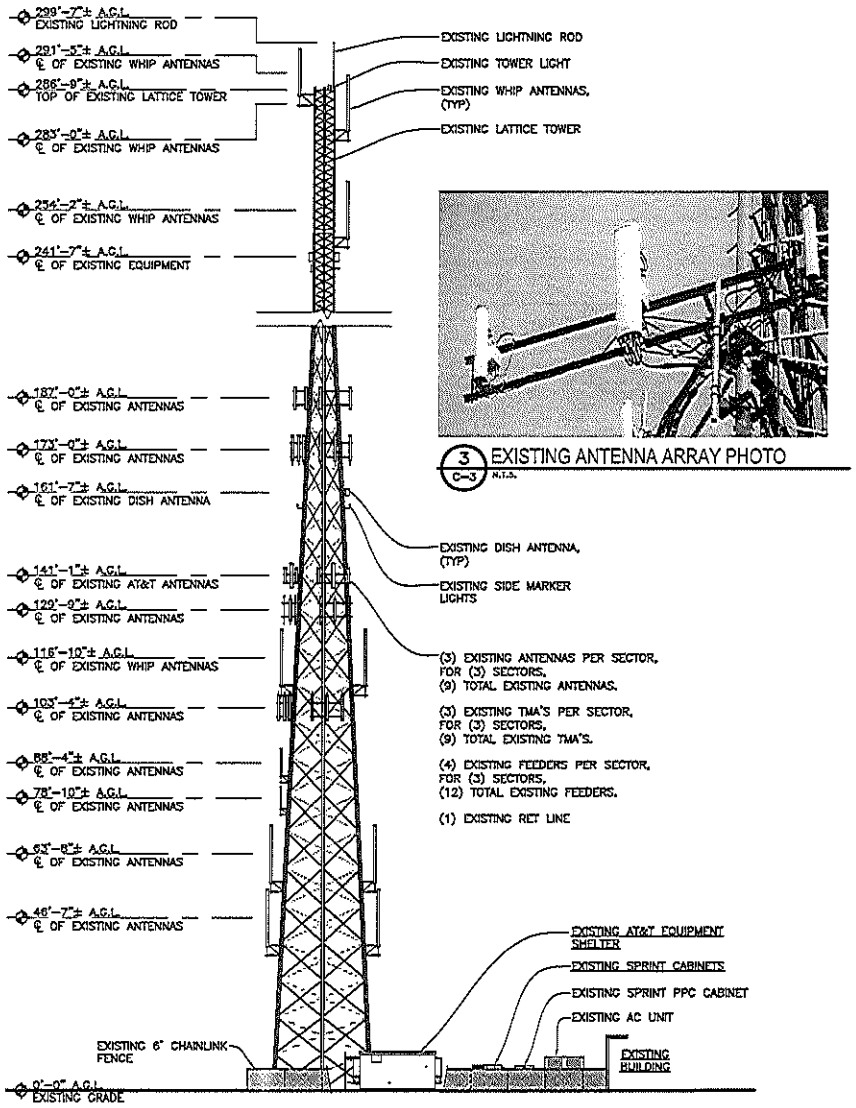

1 C-3 EXISTING TOWER ELEVATION

SCALE: 1/16"=1'-0"

REFER TO GRAPHIC SCALE FOR 11"x17" DRAWINGS

0' 8' 16' 32' 48'

3 C-3 EXISTING ANTENNA ARRAY PHOTO

N.T.S.

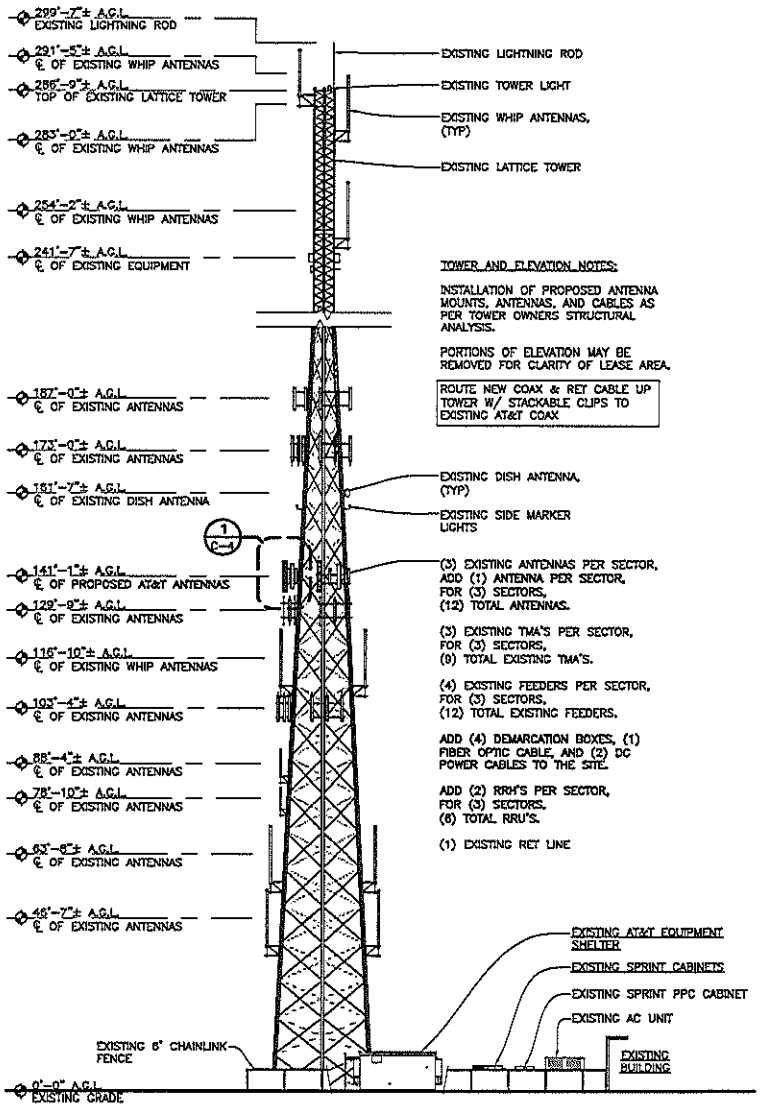

2 C-3 NEW TOWER ELEVATION

SCALE: 1/16"=1'-0"

REFER TO GRAPHIC SCALE FOR 11"x17" DRAWINGS

0' 8' 16' 32' 48'

TOWER AND ELEVATION NOTES:

INSTALLATION OF PROPOSED ANTENNA MOUNTS, ANTENNAS, AND CABLES AS PER TOWER OWNERS STRUCTURAL ANALYSIS.

PORTIONS OF ELEVATION MAY BE REMOVED FOR CLARITY OF LEASE AREA.

ROUTE NEW COAX & RET CABLE UP TOWER W/ STACKABLE CLIPS TO EXISTING AT&T COAX

ADD (2) RRH'S PER SECTOR, FOR (3) SECTORS, (6) TOTAL RRU'S.

(1) EXISTING RET LINE

at&t

Goodman Networks

Network Knowledge ... Delivered.

CHRISTOPHER WZACNY AND ASSOCIATES INC.

30150 TELEGRAPH ROAD, SUITE 114
BINGHAM FARMS, MI 48025
TEL: (248) 723-8516
FAX: (248) 723-4610

REFER TO GRAPHIC SCALE FOR 11"x17" DRAWINGS

MI2109

SITE NAME: LIVONIA POLICE TOWER

AT&T FA #: 10076130

15000 FARMINGTON ROAD
LIVONIA
MI 48154
WAYNE COUNTY

REVISIONS

REV	DATE	DESCRIPTION	BY
2	05AUG11	REVISIONS	RD
1	25JUL11	RF REVISIONS	NA
0	20APR11	FINAL CDS	JS
B	18APR11	REVISIONS	AP
A	12MAR11	PRELIM CDS 90%	AP

IT IS A VIOLATION OF LAW FOR ANY PERSON, UNLESS THEY ARE ACTING UNDER THE DIRECTION OF THE LICENSED PROFESSIONAL ARCHITECT, TO ALTER THIS DOCUMENT.

SHEET TITLE:

TOWER ELEVATIONS

PROJECT NO.:

MI2109

SHEET NUMBER:

C-3

DO NOT SCALE DRAWINGS

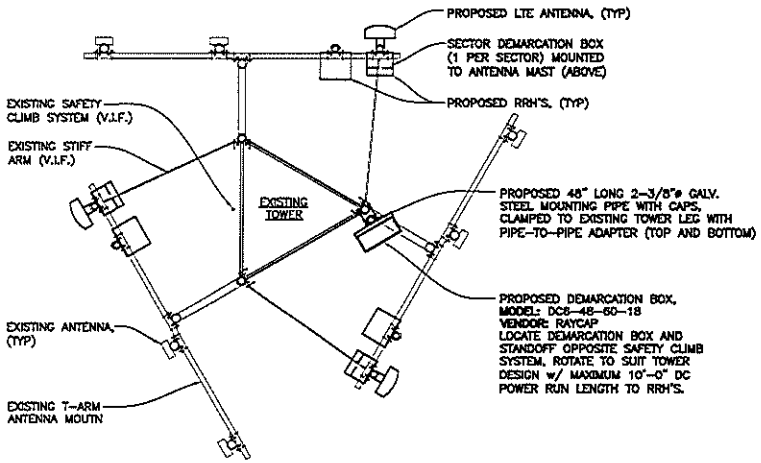

3 TYPICAL DEMARCATION BOX POSITIONING PLAN

C-4 SCALE: 1/2"=1'-0"

REFER TO GRAPHIC SCALE FOR 11"x17" DRAWINGS

0' 1' 2' 4' 6'

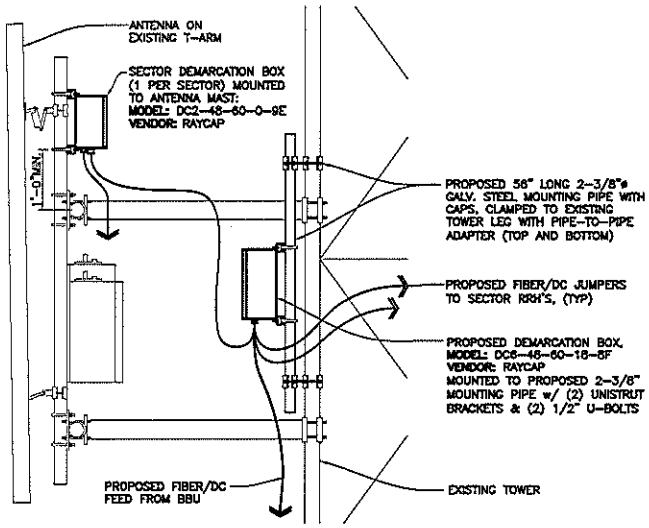

2 DC/FIBER DEMARCATION BOX MOUNTING SECTION

C-4 SCALE: 1"=1'-0"

REFER TO GRAPHIC SCALE FOR 11"x17" DRAWINGS

0' 6" 1' 2' 3'

EQUIPMENT TO BE PROVIDED BY OTHERS:

EQUIPMENT	PROVIDED BY	INSTALLED BY
TMA'S	GOODMAN NETWORKS	SUB-CONTRACTOR
POWER PANEL	EXISTING	SUB-CONTRACTOR
ANTENNAS	GOODMAN NETWORKS	SUB-CONTRACTOR
COAX CABLE AND CONNECTORS	GOODMAN NETWORKS	SUB-CONTRACTOR
TOP JUMPERS	GOODMAN NETWORKS	SUB-CONTRACTOR
BOTTOM JUMPERS	GOODMAN NETWORKS	SUB-CONTRACTOR
RET CABLES	GOODMAN NETWORKS	SUB-CONTRACTOR
SURGE ARRESTORS	GOODMAN NETWORKS	SUB-CONTRACTOR
HOFFMAN BOX FOR DIPLEXERS	GOODMAN NETWORKS	SUB-CONTRACTOR
ALL FINAL SUPPORT, SNAPINS, BUTTERFLIES AND MISCELLANEOUS HARDWARE TO BE SUPPLIED BY SUB-CONTRACTOR		

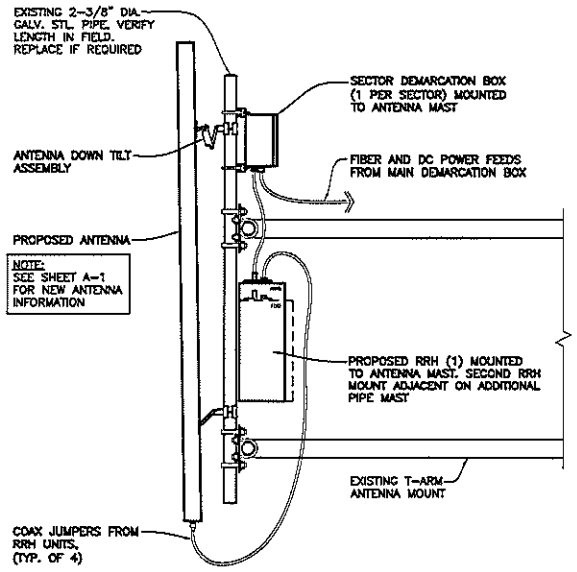

1 ANTENNA MOUNTING DETAIL -TYP.

C-4 SCALE: 1"=1'-0"

REFER TO GRAPHIC SCALE FOR 11"x17" DRAWINGS

0' 6" 1' 2' 3'

at&t

Goodman Networks

Network Knowledge ... Delivered.

CHRISTOPHER WZACNY AND ASSOCIATES INC.

30150 TELEGRAPH ROAD, SUITE 114
BINGHAM FARMS, MI 48025
TEL: (248) 723-6516
FAX: (248) 723-4810

REFER TO GRAPHIC SCALE FOR 11"x17" DRAWINGS

MI2109
SITE NAME: LIVONIA POLICE TOWER
AT&T FA #: 10076130

15050 FARMINGTON ROAD
LIVONIA
MI 48154
WAYNE COUNTY

REVISIONS

REV	DATE	DESCRIPTION	BY
2	09AUG11	REVISIONS	HD
1	29JUL11	RF REVISIONS	NA
0	28APR11	FINAL CDS	JG
B	18APR11	REVISIONS	AP
A	12MAR11	PRELIM CDS 90%	AP

IT IS A VIOLATION OF LAW FOR ANY PERSON, UNLESS THEY ARE ACTING UNDER THE DIRECTION OF THIS LICENSED PROFESSIONAL ARCHITECT, TO ALTER THIS DOCUMENT.

SHEET TITLE: DETAILS

PROJECT NO.: MI2109

SHEET NUMBER: C-4

DO NOT SCALE DRAWINGS

	ITEM DESCRIPTION	SECTOR 1 (ALPHA) AZIMUTH 30°/355°				SECTOR 2 (BETA) AZIMUTH 150°/125°				SECTOR 3 (GAMMA) AZIMUTH 270°/235°			
		1	2	3	4	1	2	3	4	1	2	3	4
	COLOR CODE	CONTRACTOR TO VERIFY COAX COLOR CODING WITH GOODMAN NETWORKS CONSTRUCTION MANAGER				CONTRACTOR TO VERIFY COAX COLOR CODING WITH GOODMAN NETWORKS CONSTRUCTION MANAGER				CONTRACTOR TO VERIFY COAX COLOR CODING WITH GOODMAN NETWORKS CONSTRUCTION MANAGER			
	ANTENNA TYPE	(E) CSM	(E) UMTS	(E) CSM	NEW LTE POWERWAVE P65-17-XLH-RR	(E) CSM	(E) UMTS	(E) CSM	NEW LTE POWERWAVE P65-17-XLH-RR	(E) CSM	(E) UMTS	(E) CSM	NEW LTE POWERWAVE P65-17-XLH-RR
	ANTENNA RAD CENTER	141.1'	141.1'	141.1'	141.1'	141.1'	141.1'	141.1'	141.1'	141.1'	141.1'	141.1'	141.1'
LTE	MECHANICAL DOWNTILT	–	–	–	4°	–	–	–	0°	–	–	–	6°
LTE	700/850 ELEC. DOWNTILT	–	–	–	4°	–	–	–	6°	–	–	–	6°
LTE	AWS/1900 ELEC. DOWNTILT	–	–	–	–	–	–	–	–	–	–	–	–
UMTS	MECHANICAL DOWNTILT	–	0°	–	–	–	0°	–	–	–	0°	–	–
UMTS	850 ELEC. DOWNTILT	–	6°	–	–	–	6°	–	–	–	3°	–	–
UMTS	1900 ELEC. DOWNTILT	–	5°	–	–	–	5°	–	–	–	3°	–	–
GSM	MECHANICAL DOWNTILT	0°	–	0°	–	0°	–	0°	–	0°	–	0°	–
GSM	850 ELEC. DOWNTILT	–	–	–	–	–	–	–	–	–	–	–	–
GSM	1900 ELEC. DOWNTILT	2°	–	2°	–	2°	–	2°	–	2°	–	2°	–
	FIBER FEEDS / PAIR COUNT	–	–	–	(N) (1)/(12)	–	–	–	–	–	–	–	–
	FIBER JUMPERS (COUNT)	–	–	–	(N) (4)	–	–	–	(N) (4)	–	–	–	(N) (4)
	DC JUMPERS (COUNT)	–	–	–	(N) (4)	–	–	–	(N) (4)	–	–	–	(N) (4)
	MAIN COAX SIZE	(E)	(E)	(E)	–	(E)	(E)	(E)	–	(E)	(E)	(E)	–
	MAIN COAX LENGTH (CUT LENGTH)	(E)	(E)	(E)	–	(E)	(E)	(E)	–	(E)	(E)	(E)	–
	NUMBER OF COAX	(E) (1)	(E) (2)	(E) (1)	–	(E) (1)	(E) (2)	(E) (1)	–	(E) (1)	(E) (2)	(E) (1)	–
	NUMBER OF TMA	(E) (1)	(E) (1)	(E) (1)	–	(E) (1)	(E) (1)	(E) (1)	–	(E) (1)	(E) (1)	(E) (1)	–
	NUMBER OF DIPLEXERS ON TOWER	–	–	–	–	–	–	–	–	–	–	–	–
	NUMBER OF DIPLEXERS ON GROUND	–	(E) (2)	–	–	–	(E) (2)	–	–	–	(E) (2)	–	–
	BIAS-T'S	–	–	–	–	–	–	–	–	–	–	–	–
	LTE RET JUMPERS	–	–	–	(N) (1)	–	–	–	(N) (1)	–	–	–	(N) (1)
	LTE RRH 700/850	–	–	–	(N) (1)	–	–	–	(N) (1)	–	–	–	(N) (1)
	LTE RRH AWS/1900	–	–	–	(N) (1)	–	–	–	(N) (1)	–	–	–	(N) (1)

NOTE: INFORMATION TAKEN FROM RF DATA SHEET DATED 07/14/2011 REV 3.0

VIEW IS FROM BACK OF ANTENNAS

1 A-1 ANTENNA SCHEDULE

(3) EXISTING ANTENNAS PER SECTOR, FOR (3) SECTORS.
(9) TOTAL EXISTING ANTENNAS.

(3) EXISTING TMA'S PER SECTOR, FOR (3) SECTORS.
(9) TOTAL EXISTING TMA'S.

(4) EXISTING FEEDERS PER SECTOR, FOR (3) SECTORS.
(12) TOTAL EXISTING FEEDERS.

(1) EXISTING RET LINE

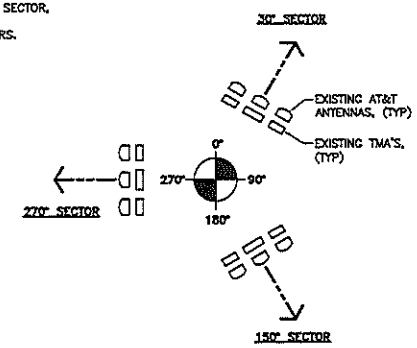

N 2 A-1 EXISTING ANTENNA LAYOUT
SCALE: NTS

(3) EXISTING ANTENNAS PER SECTOR, ADD (1) ANTENNA PER SECTOR, FOR (3) SECTORS.
(12) TOTAL ANTENNAS.

(3) EXISTING TMA'S PER SECTOR, FOR (3) SECTORS.
(9) TOTAL EXISTING TMA'S.

(4) EXISTING FEEDERS PER SECTOR, FOR (3) SECTORS.
(12) TOTAL EXISTING FEEDERS.

ADD (4) DEMARCATION BOXES, (1) FIBER OPTIC CABLE, AND (2) DC POWER CABLES TO THE SITE.

ADD (2) RRH'S PER SECTOR, FOR (3) SECTORS.
(6) TOTAL RRU'S.

(1) EXISTING RET LINE

EQUIPMENT NOTE:
NEW AT&T ANTENNAS
MODEL: P65-17-XLH-RR
VENDOR: POWERWAVE

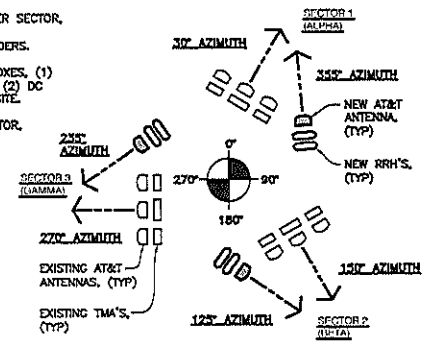

N 3 A-1 NEW ANTENNA LAYOUT
SCALE: NTS

at&t

Goodman Networks
Network Knowledge — Delivered.

CHRISTOPHER WZACNY AND ASSOCIATES INC.
30150 TELEGRAPH ROAD, SUITE 114
BINGHAM FARMS, MI 48025
TEL: (248) 723-6516
FAX: (248) 723-4910

REFER TO GRAPHIC SCALE FOR 11"x17" DRAWINGS

MI2109
SITE NAME: LIVONIA POLICE TOWER
AT&T FA #: 10076130

15000 FARMINGTON ROAD
LIVONIA
MI 48154
WAYNE COUNTY

REVISIONS

REV	DATE	DESCRIPTION	BY
2	08AUG11	REVISIONS	RO
1	26JUL11	RF REVISIONS	NA
0	28APR11	FINAL CDS	JS
B	18APR11	REVISIONS	AP
A	12MAR11	PRELIM CDS 90%	AP

IT IS A VIOLATION OF LAW FOR ANY PERSON, UNLESS THEY ARE ACTING UNDER THE DIRECTION OF THEIR LICENSED PROFESSIONAL ARCHITECT, TO ALTER THIS DOCUMENT.

SHEET TITLE:
ANTENNA SCHEDULE AND AZIMUTHS

PROJECT NO.:
MI2109

SHEET NUMBER:
A-1

DO NOT SCALE DRAWINGS

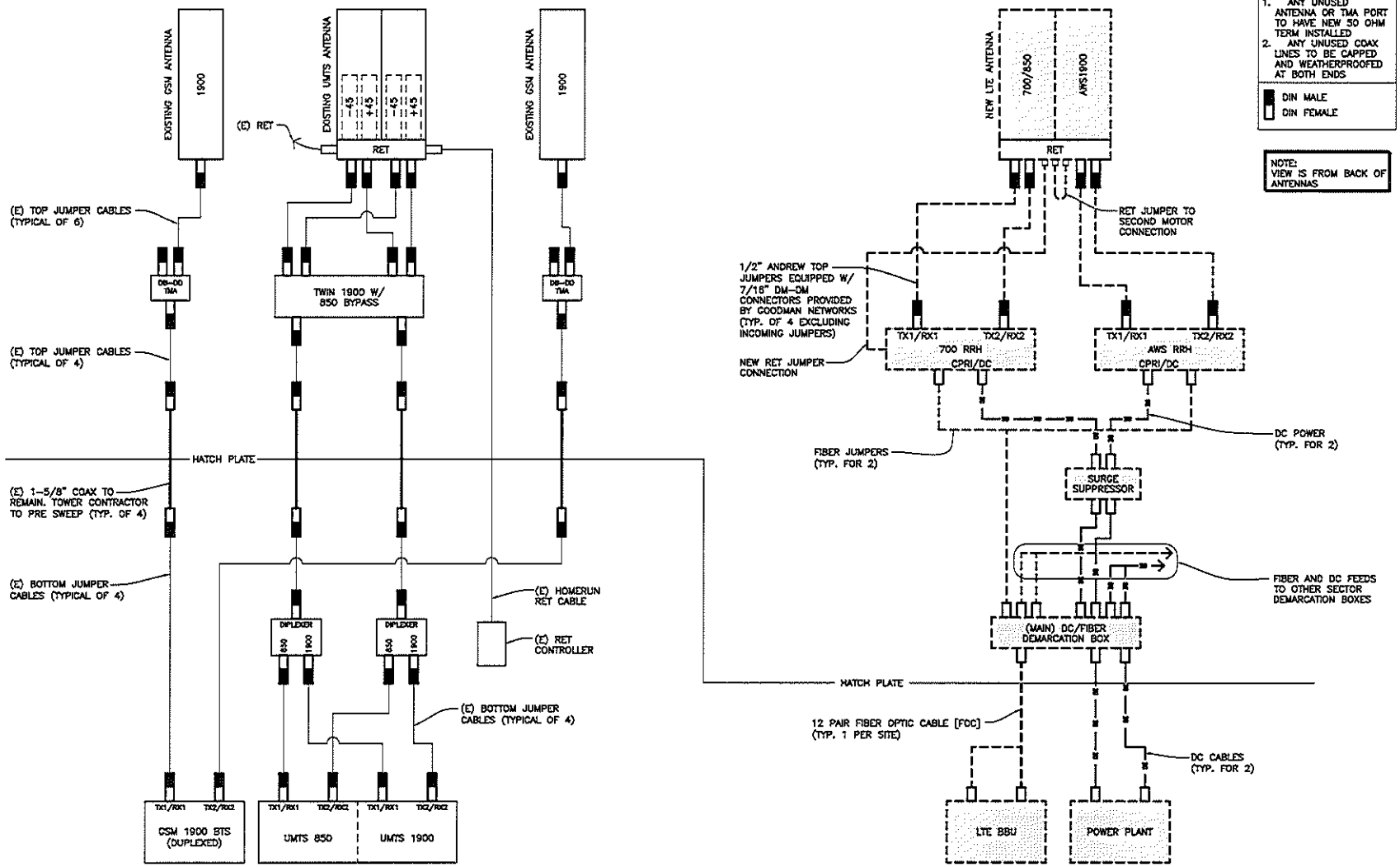

1 A-2 NEW COAX DIAGRAM (SECTOR 1)
SCALE: NTS

NOTE:
THIS CONFIGURATION IS BASED ON RF DATA SHEET V02, DATED 01/31/2011

NOTE:
1. ANY UNUSED ANTENNA OR TMA PORT TO HAVE NEW 50 OHM TERM INSTALLED
2. ANY UNUSED COAX LINES TO BE CAPPED AND WEATHERPROOFED AT BOTH ENDS

DIN MALE
DIN FEMALE

NOTE:
VIEW IS FROM BACK OF ANTENNAS

at&t

Goodman Networks
Network Knowledge ... Delivered.

CHRISTOPHER WZACNY AND ASSOCIATES INC.
30150 TELEGRAPH ROAD, SUITE 114
BINGHAM FARMS, MI 48025
TEL: (248) 723-8510
FAX: (248) 723-4810

REFER TO GRAPHIC SCALE FOR 11"x17" DRAWINGS

MI2109
SITE NAME: LIVONIA POLICE TOWER
AT&T FA #: 10076130

15600 FARMINGTON ROAD
LIVONIA
MI 48154
WAYNE COUNTY

REVISIONS

REV	DATE	DESCRIPTION	BY
2	04AUG11	REVISIONS	HD
1	25JUL11	RF REVISIONS	NA
0	26APR11	FINAL CDS	JS
B	15APR11	REVISIONS	AP
A	12MAR11	PRELIM CDS 90%	AP

IT IS A VIOLATION OF LAW FOR ANY PERSON, UNLESS THEY ARE ACTING UNDER THE DIRECTION OF THIS LICENSED PROFESSIONAL ARCHITECT, TO ALTER THIS DOCUMENT.

SHEET TITLE
COAX DIAGRAM (SECTOR 1)

PROJECT NO.:
MI2109

SHEET NUMBER:
A-2

DO NOT SCALE DRAWINGS

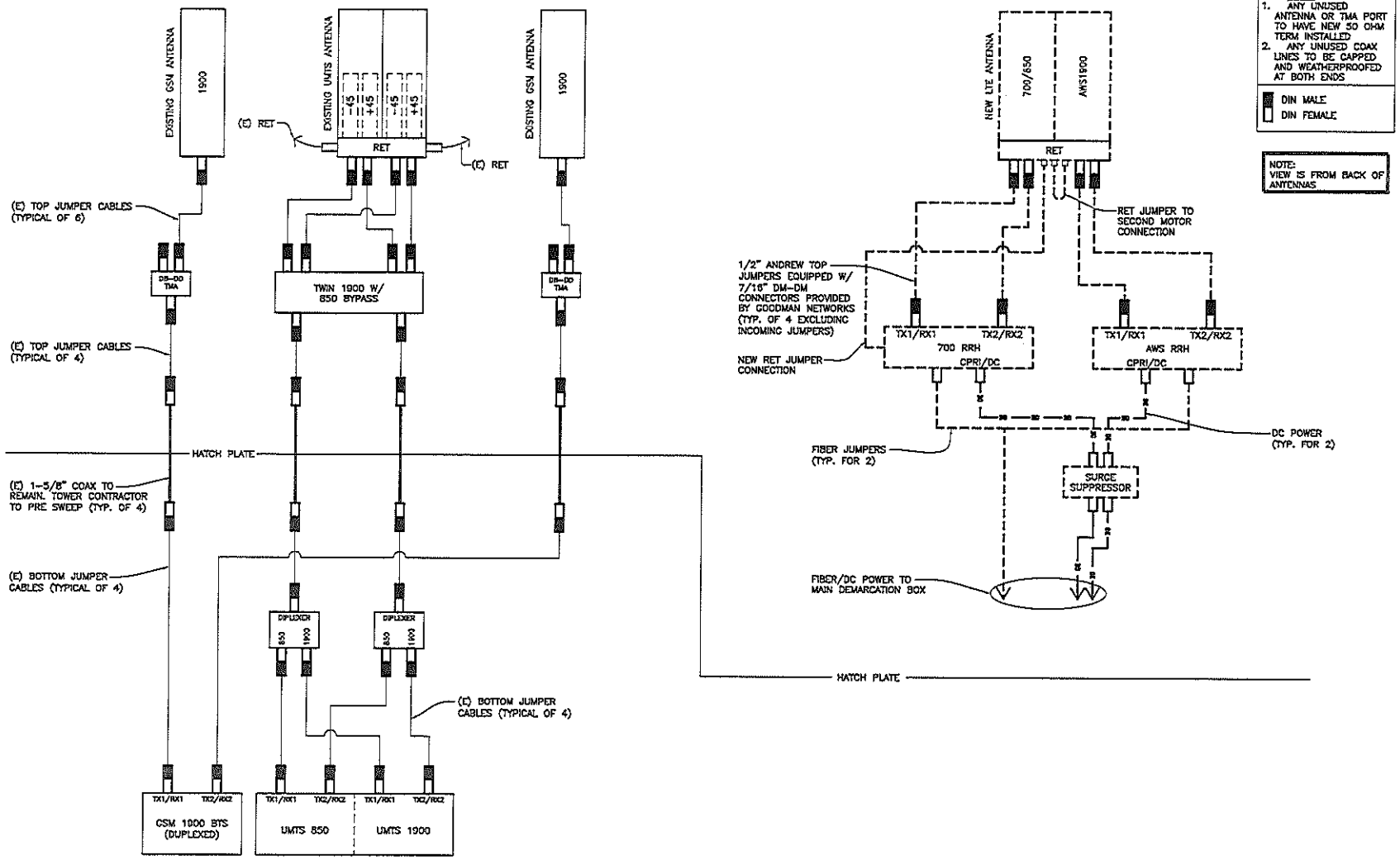

1 A-3 NEW COAX DIAGRAM (SECTORS 2 & 3)
SCALE: NTS

NOTE:
THIS CONFIGURATION IS BASED ON RF DATA SHEET V02, DATED 01/31/2011

NOTE:
1. ANY UNUSED ANTENNA OR TMA PORT TO HAVE NEW 50 OHM TERM INSTALLED
2. ANY UNUSED COAX LINES TO BE CAPPED AND WEATHERPROOFED AT BOTH ENDS

DIN MALE
DIN FEMALE

NOTE:
VIEW IS FROM BACK OF ANTENNAS

at&t

Goodman Networks
Network Knowledge — Delivered.

CHRISTOPHER WZACNY AND ASSOCIATES INC.
30150 TELEGRAPH ROAD, SUITE 114
BINGHAM FARMS, MI 48025
TEL: (248) 723-0510
FAX: (248) 723-4510

REFER TO GRAPHIC SCALE FOR 11"x17" DRAWINGS

MI2109
SITE NAME: LIVONIA POLICE TOWER
AT&T FA #: 10076130

15000 FARMINGTON ROAD
LIVONIA
MI 48154
WAYNE COUNTY

REVISIONS

REV	DATE	DESCRIPTION	BY
2	09AUG11	REVISION/R	RG
1	29JUL11	RF REVISIONS	NA
0	26APR11	FINAL CDS	JS
B	18APR11	REVISIONS	AP
A	12MAR11	PRELIM CDS 90%	AP

IT IS A VIOLATION OF LAW FOR ANY PERSON, UNLESS THEY ARE ACTING UNDER THE DIRECTION OF THIS LICENSED PROFESSIONAL ARCHITECT, TO ALTER THIS DOCUMENT.

SHEET TITLE:
COAX DIAGRAM (SECTORS 2 & 3)

PROJECT NO.: MI2109

SHEET NUMBER: A-3

DO NOT SCALE DRAWINGS

COPYRIGHT © 2011 THE DOCUMENT FOLLOWING DRAWINGS NOTES AND SPECIFICATIONS IS THE SOLE PROPERTY OF CWA INC. AND WAS NOT BE REPRODUCED, COPIED OR USED IN ANY WAY EXCEPT FOR THE PURPOSES ASSOCIATED WITH THE CONSTRUCTION OF THE PROJECT. NO PART OF THIS DOCUMENT MAY BE REPRODUCED WITHOUT WRITTEN CONSENT OF CWA INC.

CABLE PORT DIAGRAM
CAUTION: HARMFUL RF ENERGY EXISTS ON THESE LINES

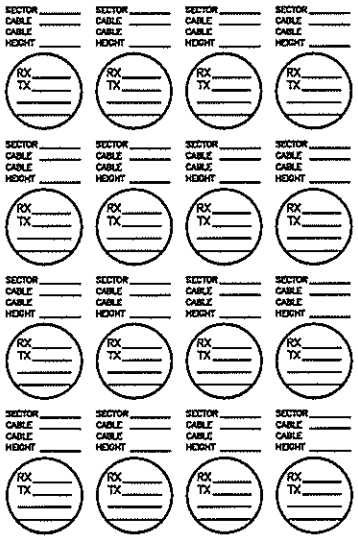

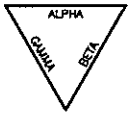

TOWER PLAN VIEW

CABLE PORT NOTES:
CONTRACTOR SHALL FILL OUT THE CABLE PORT DIAGRAM UPON COAX INSTALLATION. CABLE PORT DIAGRAM WILL BE AFFIXED TO THE INTERIOR SHELTER WALL NEAR THE CABLE ENTRY PORT TO AID IN CABLE IDENTIFICATION. THE CHART IS INTENDED TO BE USED TO RECORD THE LINE AND CORRESPONDING ANTENNA POSITION ON THE TOWER AT THE TIME OF INSTALLATION.

ONE COMPLETED COPY PLUS TWO BLANK COPIES OF THE CHART SHOULD BE POSTED IN THE SHELTER IN A PROTECTIVE PLASTIC SLEEVE.

at&t

Goodman Networks
Network Knowledge ... Delivered.

CHRISTOPHER WZACNY AND ASSOCIATES INC.
30150 TELEGRAPH ROAD, SUITE 114
BINGHAM FARMS, MI 48025
TEL: (248) 723-6516
FAX: (248) 723-4810

REFER TO GRAPHIC SCALE FOR 11"x17" DRAWINGS

MI2109
SITE NAME: LIVONIA POLICE TOWER
AT&T FA #: 10076130

15099 FARMINGTON ROAD
LIVONIA
MI 48154
WAYNE COUNTY

REVISIONS

REV	DATE	DESCRIPTION	BY
2	09AUG11	REVISIONS	HO
1	28JUL11	RF REVISIONS	NA
0	29APR11	FINAL CDS	JS
B	18APR11	REVISIONS	AP
A	12MAR11	PRELIM CDS 90%	AP

IT IS A VIOLATION OF LAW FOR ANY PERSON, UNLESS THEY ARE ACTING UNDER THE DIRECTION OF THIS LICENSED PROFESSIONAL ARCHITECT, TO ALTER THIS DOCUMENT.

SHEET TITLE:
COAX AND WAVEBRIDGE DETAILS

PROJECT NO.: MI2109

SHEET NUMBER: A-4

DO NOT SCALE DRAWINGS

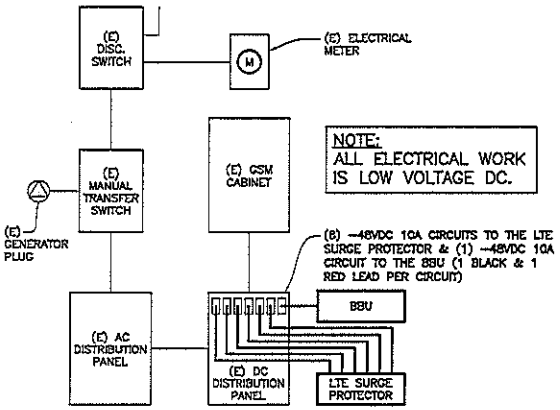

3 E-1 ELECTRICAL ONE LINE DIAGRAM

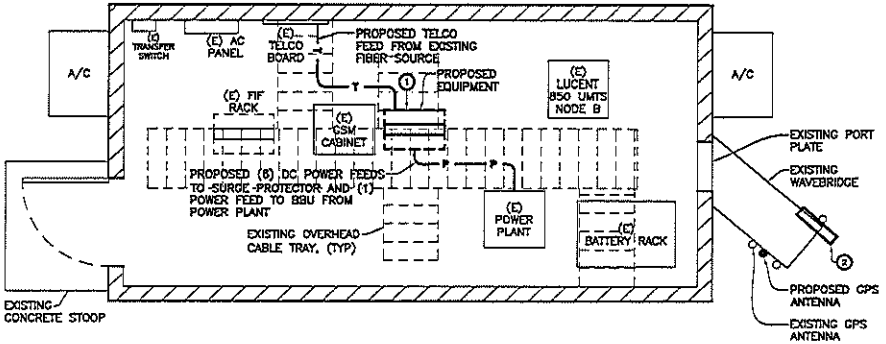

N 2 E-1 PROPOSED EQUIPMENT ELECTRICAL PLAN
SCALE 1/2"=1'-0"
REFER TO GRAPHIC SCALE FOR 11"x17" DRAWINGS
0' 1' 2' 4' 6'

GROUNDING LEGEND	
1	PROPOSED RADIO EQUIPMENT
2	PROPOSED FIBER COL. BOX
3	EXISTING MASTER GROUND BAR. VERIFY LUG SLOT AVAILABILITY, REPLACE AS REQUIRED
4	EXISTING COAX GROUND BAR. VERIFY LUG SLOT AVAILABILITY, REPLACE AS REQUIRED
5	EQUIPMENT GROUND LEADS, ROUTED ON CABLE TRAY TO MASTER GROUND BAR (TYPICAL)

● = MECHANICAL CONNECTION
■ = CAD WELD CONNECTION

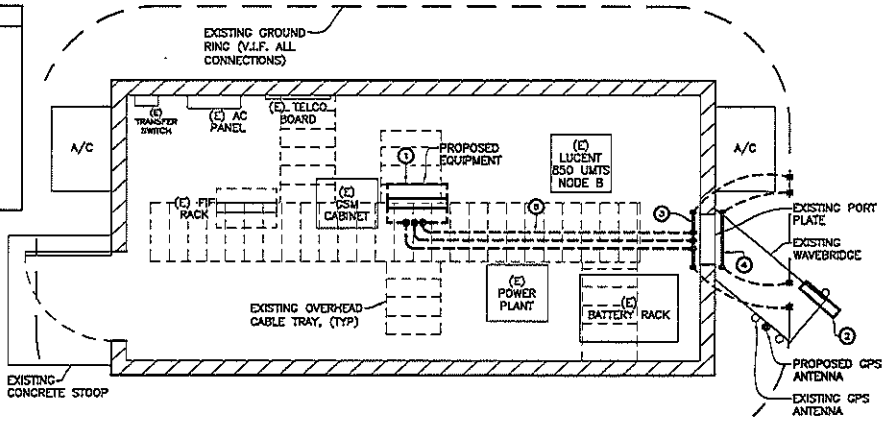

N 1 E-1 PROPOSED EQUIPMENT GROUNDING PLAN
SCALE 1/2"=1'-0"
REFER TO GRAPHIC SCALE FOR 11"x17" DRAWINGS
0' 1' 2' 4' 6'

at&t

Goodman Networks
Network Knowledge — Delivered.

CHRISTOPHER WZACNY AND ASSOCIATES INC.
30150 TELEGRAPH ROAD, SUITE 114
BINGHAM FARMS, MI 48025
TEL: (248) 723-0516
FAX: (248) 723-4010

REFER TO GRAPHIC SCALE FOR 11"x17" DRAWINGS

MI2109
SITE NAME: LIVONIA POLICE TOWER
AT&T FA #: 10076130

15000 FARMINGTON ROAD
LIVONIA
MI 48154
WAYNE COUNTY

REVISIONS

REV	DATE	DESCRIPTION	BY
2	08AUG11	REVISIONS	RD
1	25JUL11	RF REVISIONS	NA
0	28APR11	FINAL CDS	JS
B	18APR11	REVISIONS	AP
A	12MAR11	PRELIM CDS 90%	AP

IT IS A VIOLATION OF LAW FOR ANY PERSON, UNLESS THEY ARE ACTING UNDER THE DIRECTION OF THE LICENSED PROFESSIONAL ARCHITECT, TO ALTER THIS DOCUMENT.

SHEET TITLE:
ELECTRICAL & GROUNDING PLANS, ONE LINE DIAGRAM

PROJECT NO.: MI2109

SHEET NUMBER: E-1

DO NOT SCALE DRAWINGS

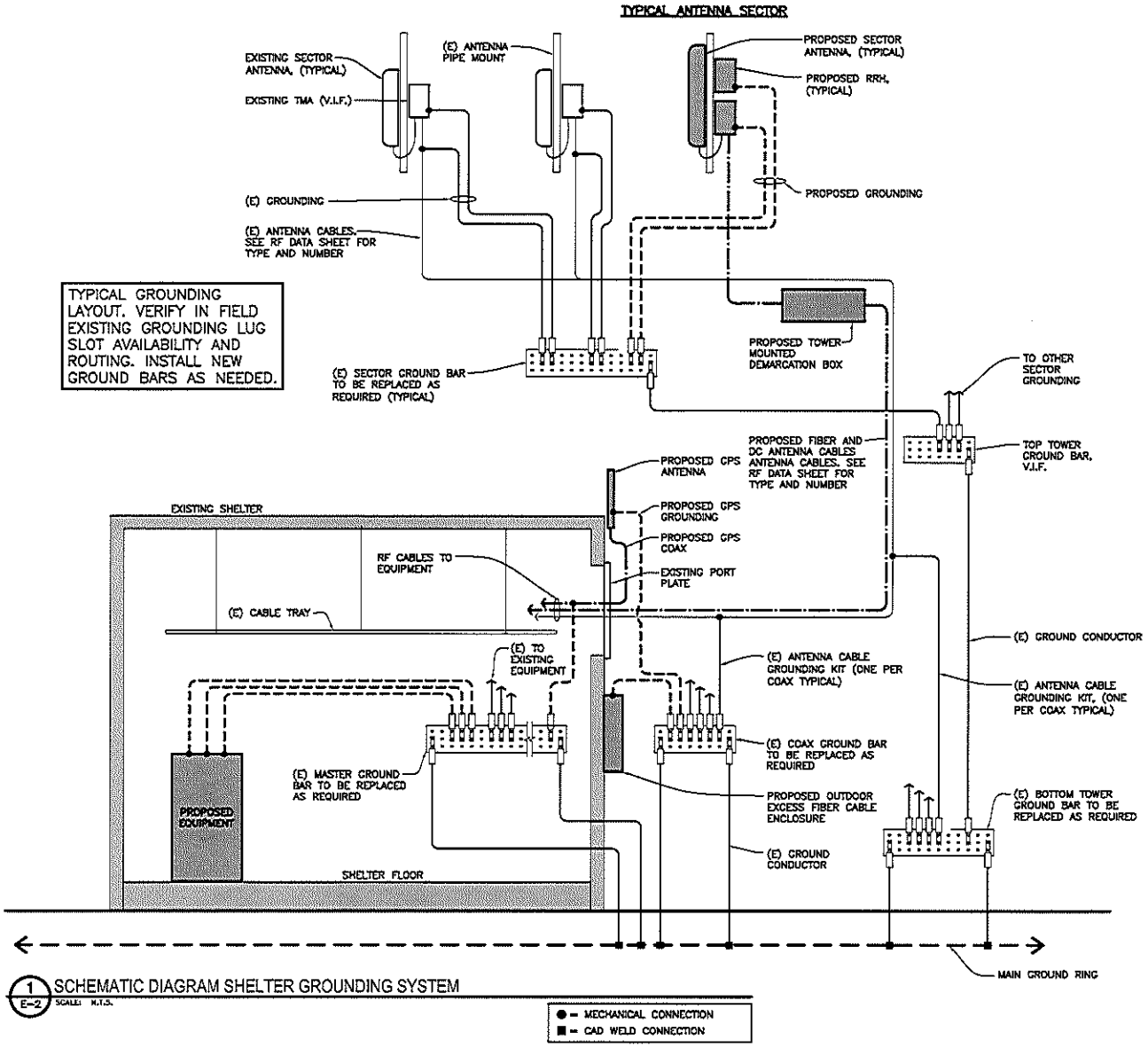

1 E-2 SCHEMATIC DIAGRAM SHELTER GROUNDING SYSTEM
SCALE: N.T.S.

at&t

Goodman Networks
Network Knowledge ... Delivered.

CHRISTOPHER WZACNY AND ASSOCIATES INC.
30150 TELEGRAPH ROAD, SUITE 114
BINGHAM FARMS, MI 48025
TEL: (248) 723-8516
FAX: (248) 723-4810

REFER TO GRAPHIC SCALE FOR 11"x17" DRAWINGS

MI2109
SITE NAME: LIVONIA POLICE TOWER
AT&T FA #: 10076130

16000 FARMINGTON ROAD
LIVONIA
MI 48154
WAYNE COUNTY

REVISIONS

REV	DATE	DESCRIPTION	BY
2	08AUG11	REVISIONS	RD
1	06JUL11	RF REVISIONS	NA
0	04APR11	FINAL CDS	JS
B	13APR11	REVISIONS	AP
A	12MAR11	FINCLUM CDS 90%	AP

IT IS A VIOLATION OF LAW FOR ANY PERSON, UNLESS THEY ARE ACTING UNDER THE DIRECTION OF THIS LICENSED PROFESSIONAL ARCHITECT, TO ALTER THIS DOCUMENT.

SHEET TITLE:
GROUNDING SCHEMATIC

PROJECT NO.:
MI2109

SHEET NUMBER:
E-2

DO NOT SCALE DRAWINGS

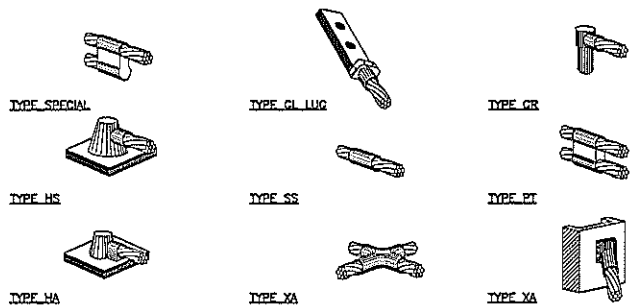

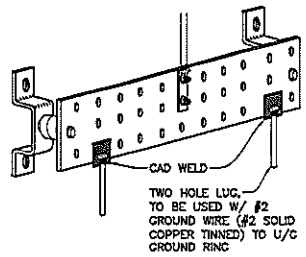

NOTES:
1. TINNED COPPER GROUND BAR, 1/4" X 4" X 20", NEWTON INSTRUMENTS OR APPROVED EQUAL. HOLES CENTER TO MATCH NEMS DOUBLE LUG CONFIGURATION.

2. INSULATORS– NEWTON CAT. NO 3015–8 OR APPROVED EQUAL. (WHERE REQUIRED)

3. 5/8" LOCK WASHERS NEWTON CAT. NO. A–6056 OR APPROVED EQUAL.

4. 5/8" –11 X 1" M.M.C.S. BOLTS NEWTON CAT. NO.– 3012–1 OR APPROVED EQUAL.

5. COAT ALL SURFACES W/ "KOPER SHIELD" BEFORE MATING.

6. ALL HARDWARE TO BE STAINLESS STEEL UNLESS OTHERWISE INDICATED.
NUTS TO FACE OUT

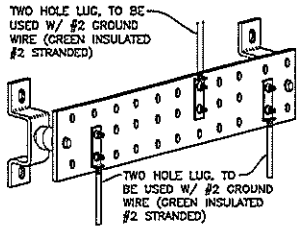

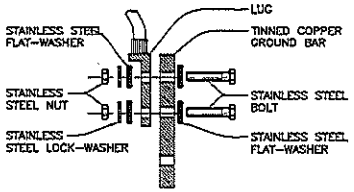

1 / E-3 TYPICAL GROUND BAR

SCALE: NTS

ELECTRICAL – GENERAL NOTES:

THE GENERAL NOTES AND ACCOMPANYING DRAWINGS ARE TO INDICATE THE PROVISIONS AND INSTALLATION BY THE ELECTRICAL CONTRACTOR OF ALL LABOR, MATERIALS, AND EQUIPMENT REQUIRED TO INSTALL THE ELECTRICAL WORK COMPLETE IN CONNECTION WITH THIS, THE OWNER. SITE SHALL INCLUDE, BUT NOT BE LIMITED TO, THE FOLLOWING:

1. THE INSTALLATION, PROVISIONS, AND CONNECTION OF A GROUND ROD (ELECTRODE) SYSTEM COMPLETE WITH A BUILDING AND SECONDARY GROUNDING AND CONNECTING TO THE INCOMING ELECTRICAL DISTRIBUTION EQUIPMENT.

2. THE INSTALLATION AND PROVISION OF AN ELECTRICAL SERVICE (OVERHEAD OR UNDERGROUND) AND ALL CONDUIT AND WIRE ASSOCIATED WITH IT AS INDICATED AND/OR REQUIRED ON PLANS.

3. THE INSTALLATION, PROVISION OF CONDUIT AND CONNECTIONS FOR LOCAL TELEPHONE SERVICE.

4. FOUR INCH DIAMETER CONDUITS SHALL BE PVC SCHEDULE #40, UNLESS OTHERWISE NOTED.

5. ALL FISH LINE SHALL BE LEFT IN CONDUITS (PVC) FOR FUTURE USE.

6. THE CONTRACTOR SHALL FURNISH AND INSTALL ELECTRICAL SERVICE ENTRANCE CONDUCTORS, CONDUIT AND METER SOCKET AND MAKE THE NECESSARY CONNECTION TO THE SERVICE EQUIPMENT WITHIN THE BUILDING.

CONTRACTOR TO LOCATE ALL UNDERGROUND UTILITIES PRIOR TO ANY EXCAVATION. EXTREME CAUTION IS TO BE EXERCISED IN AREAS THAT COULD POTENTIALLY CONTAIN UNDERGROUND UTILITIES. CONTRACTOR WILL BE HELD SOLELY RESPONSIBLE FOR ANY UNSCHEDULED INTERRUPTION/ LOSS OF SERVICE THAT MAY OCCUR TO ANY EXISTING TENANT AT THIS SITE.

UTILITIES GENERAL NOTES

1. UTILITY POINTS OF SERVICE AND WORK / MATERIALS SHOWN ARE BASED ON PRELIMINARY INFORMATION ONLY. PROVIDED BY THE UTILITY COMPANIES AND ARE FOR BID PURPOSE ONLY.

2. CONTRACTOR SHALL COORDINATE WITH UTILITY COMPANY FOR FINAL AND EXACT WORK / MATERIALS REQUIREMENTS AND CONSTRUCT TO UTILITY COMPANY PLANS AND SPECIFICATIONS ONLY. CONTRACTOR SHALL FURNISH AND INSTALL ALL CONDUIT, PULL WIRES, CABLES, PULLBOXES, CONCRETE ENCASEMENT OF CONDUIT (IF REQUIRED), TRANSFORMER PAD, BARRIERS, POLE RISERS, TRENCHING, BACKFILL, AND PAY ALL UTILITY COMPANY FEES AND INCLUDE ALL REQUIREMENTS IN SCOPE OF WORK.

3. ALL FISH LINE SHALL BE LEFT IN CONDUITS (PVC) FOR FUTURE USE.

ELECTRICAL WIRING AND RACEWAYS

1. WIRING OF ALL KINDS MUST BE INSTALLED IN CONDUIT, UNLESS OTHERWISE NOTED OR APPROVED BY THE ELECTRICAL ENGINEER.

2. ALL WIRING SHALL BE COPPER TYPE THWN AND IN ACCORDANCE WITH THE (NEC) NATIONAL ELECTRICAL CODE OR AS INDICATED ON PLANS.

3. RACEWAYS SHALL BE STEEL GALVANIZED, WITH SIZE AS SPECIFIED AND IN ACCORDANCE WITH THE (NEC) NATIONAL ELECTRICAL CODE UNLESS OTHERWISE NOTED ON PLANS. ALL RACEWAYS SHALL BE APPROVED PRIOR TO INSTALLATION

4. JUNCTION BOXES OR PULL BOXES SHALL MEET (NEC) NATIONAL ELECTRICAL CODE STANDARDS AND AS APPROVED FOR INSTALLATION OF RACEWAYS AND WIRING.

5. THE RACEWAY AND WIRING INSTALLATION SHALL BE GROUNDED PERMANENTLY AND EFFECTIVELY IN ACCORDANCE WITH ARTICLE 250 OF THE (NEC) NATIONAL ELECTRICAL CODES.

ELECTRICAL – GROUNDING SYSTEM

ALL GROUNDING CONDUCTORS SHALL BE #2 SOLID TINNED COPPER, UNLESS OTHERWISE NOTED.

CONDUCTORS ARE TO BE INSTALLED AT 3'–0" FROM SHELTER AND TOWER.

GROUND SYSTEM MUST BE TESTED AND SHALL HAVE A RESISTANCE OF 5 OHMS OR LESS SUBMIT AN INDEPENDENT FALL POTENTIAL TESTING REPORT.

ALL UNDERGROUND GROUNDING CONNECTORS ARE TO BE CADWELDED. ABOVE GRADE GROUNDING SHALL BE EITHER CADWELD OR MECHANICAL, AS SPECIFIED ON DRAWINGS.

ALL GROUNDING INSTALLATION IS TO BE IN ACCORDANCE WITH AT&T STANDARDS AND SUPPLEMENTS PROVIDED BY THE PROJECT MANAGER.

GATE GROUNDING FLEX CONNECTOR: (IF REQUIRED) REF. "CADWELD" CATALOG #A0402 FOR GATE/POST FLEX CONNECTOR (EXAMPLE: PART NO. A239FC25–Y–XL FOR 3" POST).

GROUND RODS SHALL BE INSTALLED VERTICALLY IN THE EXISTING UNDISTURBED EARTH, SPACED 10' ON CENTER. ALL GROUND RODS SHALL BE 5/8" DIA. X 8'–0" LONG COPPERCLAD GROUND RODS UNLESS OTHERWISE NOTED, OR AS APPROVED BY THE FIELD ENGINEER.

ALL EXOTHERMIC CONNECTIONS ON GALVANIZED SURFACES SHALL BE CLEANED THOROUGHLY AND COVERED WITH TWO (2) COATS SHERWIN WILLIAMS CALVITE PAINT 3350W3 (OR EQUAL).

ALL ELECTRICAL AND MECHANICAL GROUND CONNECTIONS WILL HAVE NO OXIDATION COMPOUND APPLIED TO CONNECTION.

THE GROUNDING SYSTEM SHALL BE TESTED AS SPECIFIED IN THE GROUND RESISTANCE TEST.

ALL DETAILS ARE SHOWN IN GENERAL TERMS. ACTUAL GROUNDING INSTALLATION AND CONSTRUCTION MAY VARY DUE TO THE SPECIFIC SITE CONDITIONS.

ALL EXTERIOR GROUNDING AND TOP OF GROUNDING RODS SHALL BE BURIED TO A MINIMUM DEPTH OF 42" BELOW FINISH GRADE. ELECTRIC METER GROUND EXCLUDED.

GENERAL NOTES

PRIOR TO THE SUBMISSION OF BIDS. THE ELECTRICAL CONTRACTOR SHALL VERIFY ALL DETAILS AND SCHEDULES ON THE DRAWINGS AND SPECIFICATIONS PROVIDED BY THE OWNER. FOR MEANING OF ABBREVIATIONS AND ADDITIONAL REQUIREMENTS AND INFORMATION. CHECK ELECTRICAL DRAWINGS FOR SCALE AND REPORT ANY DISCREPANCIES, CONFLICTS, ETC. TO THE OWNER BEFORE SUBMITTING BID.

CONTRACTOR LIABILITY

THE CONTRACTOR SHALL BE LIABLE FOR PROVIDING AND SECURING ALL REQUIRED PERMITS, LICENSES, INSPECTIONS, APPROVALS. AND PAYMENT OF ALL FEES.

THE INSTALLATION SHALL BE IN ACCORDANCE WITH ALL APPLICABLE CODES: STATE, LOCAL, AND NATIONAL. ALL THE DESIGN, PERFORMANCE CHARACTERISTIC METHODS OF CONSTRUCTION OF ALL ITEMS AND EQUIPMENT SHALL BE IN ACCORDANCE WITH THE LATEST ISSUE OF VARIOUS APPLICABLE STANDARD SPECIFICATIONS OF THE FOLLOWING RECOGNIZED AUTHORITIES:

NEC	NATIONAL ELECTRIC CODE
ANSI	AMERICAN NATIONAL STANDARD INSTITUTE
IEEE	INSTITUTE OF ELECTRICAL AND ELECTRONIC ENGINEERS
ASTM	AMERICAN SOCIETY FOR TESTING MATERIALS
NEMA	NATIONAL ELECTRICAL MANUFACTURERS ASSOCIATION
UL	UNDERWRITERS LABORATORY, INC.

ELECTRICAL ABBREVIATIONS

ATW	ATTACHED TO WALL	MTD	MOUNTED
C	CONDUIT	MGB	MASTER GROUND BUS BAR
CTW	CLOSE TO WALL	NEC	NATIONAL ELECTRIC CODE
EGB	EXTERNAL GROUND BUS BAR	PB	PULL BOX
EGRE	EMERGENCY GENERATOR RECEPTACLE	PH	PHASE (#)
FBO	FURNISHED BY OTHERS	PNL	PANEL
GFI	GROUND FAULT INTERRUPTER	RGS	RIGID GALVANIZED STEEL CONDUIT
HP	HORSEPOWER	SW	SWITCH
JB	JUNCTION BOX	TTC	TELEPHONE TERMINAL CABINET
KW	KILOWATTS	V	VOLTS
MAX	MAXIMUM	W	WIRE
MIN	MINIMUM	WM	WATER MAIN
MFR	MANUFACTURER	WP	WEATHERPROOF

at&t

Goodman Networks
Network Knowledge ... Delivered.

CHRISTOPHER WZACNY AND ASSOCIATES INC.
30150 TELEGRAPH ROAD, SUITE 114
BINGHAM FARMS, MI 48025
TEL: (248) 723-8516
FAX: (248) 723-4610

REFER TO GRAPHIC SCALE FOR 11"x17" DRAWINGS

MI2109
SITE NAME: LIVONIA POLICE TOWER
AT&T FA #: 10076130

15000 FARMINGTON ROAD
LIVONIA
MI 48154
WAYNE COUNTY

REVISIONS

REV	DATE	DESCRIPTION	BY
2	06AUG11	REVISIONS	HD
1	26JUL11	RF REVISIONS	NA
0	26APR11	FINAL CDS	JB
B	18APR11	REVISIONS	AP
A	12MAR11	PRELIM CDS 90%	AP

IT IS A VIOLATION OF LAW FOR ANY PERSON, UNLESS THEY ARE ACTING UNDER THE DIRECTION OF THIS LICENSED PROFESSIONAL ARCHITECT, TO ALTER THIS DOCUMENT.

SHEET TITLE:
GROUNDING DETAILS AND ELECTRICAL NOTES

PROJECT NO.: MI2109

SHEET NUMBER: E-3

DO NOT SCALE DRAWINGS

EXHIBIT D

LESSEE: AT&T

LOCATION: Livonia Police Station

COMMENCEMENT DATE: November 2011

SCHEDULE OF RENTS (Annual Increases) 4.0%

PERIOD					ANNUAL RENT
INITIAL TERM					
November	2011	TO	October	2012	$52,223
November	2012	TO	October	2013	54,312
November	2013	TO	October	2014	56,484
November	2014	TO	October	2015	58,744
November	2015	TO	October	2016	61,094
1ST FIVE YEAR EXTENSION					
November	2016	TO	October	2017	63,537
November	2017	TO	October	2018	66,079
November	2018	TO	October	2019	68,722
November	2019	TO	October	2020	71,471
November	2020	TO	October	2021	74,330
2ND FIVE YEAR EXTENSION					
November	2021	TO	October	2022	77,303
November	2022	TO	October	2023	80,395
November	2023	TO	October	2024	83,611
November	2024	TO	October	2025	86,955
November	2025	TO	October	2026	90,433
3RD FIVE YEAR EXTENSION					
November	2026	TO	October	2027	94,051
November	2027	TO	October	2028	97,813
November	2028	TO	October	2029	101,725
November	2029	TO	October	2030	105,794
November	2030	TO	October	2031	110,026
GRAND TOTAL					$1,555,101

P:\Agreements\towers\[Attachment to Exhibit D ATT Amendment.xls]ATTRENT

Vice President Walsh left the podium at 8:35 p.m. due to a conflict of interest on the next Agenda item.

CELLULAR TOWERS
Rec. and file info. from Law Dept. re: tower study that was conducted by AT&T Wireless Services.

A communication from the Department of Law, dated February 10, 1998, re: a tower study that was conducted by AT&T Wireless Services, dated December 8, 1997, was received and placed on file for the information of the Council. FEB 11 1998

CELLULAR TOWERS
Rec. and file info. from Law Dept. re: payment made for relocation of existing cellular tower antennaes in other municipalities by AT&T Wireless Services.

A communication from the Department of Law, dated February 9, 1998, re: payment made for relocation of existing cellular tower antennaes in other municipalities was received and placed on file for the information of the Council. FEB 11 1998

CELLULAR TOWERS
Rec. and file info. from AT&T Wireless re: forwarding check for annual rent at 15080 Farmington Road.

A communication from AT&T Wireless Services, dated January 29, 1998, re: forwarding a check for the annual rent at 15080 Farmington Road was received and placed on file for the information of the Council. FEB 11 1998

CELLULAR TOWERS
Rec. and file info. from Planning Dept. re: listing of Cellular Towers.

A report prepared by the Planning Department, dated February 4, 1998, re: Cellular Towers was received and placed on file for the information of the Council. FEB 11 1998

On a motion by Brosnan, seconded by Laura, it was:

CELLULAR TOWERS
Approval of the modification of the lease agreement bet. the City of Livonia and AT&T Wireless Services for the space on the cellular tower antennae at the Livonia Police Station site to allow AT&T Wireless Services to place its antennae at a higher level on the tower subject to payment by AT&T Wireless Services to the City of a one-time fee of $15,000.

RESOLVED, that having considered a communication from the Department of Law, dated January 23, 1998, approved for submission by the Mayor, regarding a proposed modification of the lease agreement between the City of Livonia and AT&T Wireless Services for the space on the cellular tower antennae at the Livonia Police Station site to allow AT&T Wireless Services to place its antennae at a higher level on the tower, the Council does hereby approve the proposed modification of the lease agreement, subject to approval as to form by the Department of Law, to allow AT&T Wireless Services to place its antennae at the 145' to 155' level (as opposed to the current 100' level) subject to payment by AT&T Wireless Services to the City of a one-time fee of $25,000.00 with the 3rd, 4th and 5th years of the lease open for re-negotiation; and the Mayor and City Clerk are hereby authorized to execute the necessary amendatory agreement for and on behalf of the City of Livonia with AT&T Wireless Services, and to do all other things necessary or incidental to the full performance of this resolution. FEB 11 1998

On a motion by Laura, seconded by ___(none)___, it was:

RESOLVED, that the Council does hereby call the previous question and end debate.

A roll call vote was taken on the motion to call the previous question with the following result:

AYES: Brosnan, Vandersloot, Pastor, Laura, and Engebretson.

NAYS: None.

The President declared debate ended.

A roll call vote was then taken on the aforementioned resolution with the following result:

AYES: Brosnan and Laura.

NAYS: Vandersloot, Pastor, and Engebretson.

The President declared the resolution denied.

On a motion by Brosnan, seconded by Laura, it was:

RESOLVED, that having considered a communication from the Department of Law, dated January 23, 1998, approved for submission by the Mayor, regarding a proposed modification of the lease agreement between the City of Livonia and AT&T Wireless Services for the space on the cellular tower antennae at the Livonia Police Station site to allow AT&T Wireless Services to place its antennae at a higher level on the tower, the Council does hereby refer this item to the Capital Improvement Committee for its report and recommendation.

A roll call vote was taken on the foregoing resolution with the following result:

AYES: Brosnan and Laura.

NAYS: Vandersloot, Pastor, and Engebretson.

The President declared the resolution denied.

On a motion by Vandersloot, seconded by Pastor, it was:

#120-98 RESOLVED, that having considered a communication from the Department of Law, dated January 23, 1998, approved for submission by the Mayor, regarding a proposed modification of the lease agreement between the City of Livonia and AT&T Wireless Services for the space on the cellular tower antennae at the Livonia Police Station site to allow AT&T Wireless Services to place its antennae at a higher level on the tower, the Council does hereby approve the proposed modification of the lease agreement, subject to approval as to form by the Department of Law, to allow AT&T Wireless Services to place its antennae at the 145' to 155' level (as opposed to the current 100' level) subject to payment by AT&T Wireless Services to the City of a one-time fee of $15,000.00; FURTHER, the Council does hereby authorize an appropriation in the amount of $7,500.00 from Account No. 101-707-974-000, Parks and Recreation - Capital Outlay, for purchase of playground equipment at Ben Celani Park and an appropriation of $7,500.00 from Account No. 101-304-987-000, Police Administration - Capital Outlay, for purchase of improvements to the Police gun range; and the Mayor and City Clerk are hereby authorized to execute the necessary amendatory agreement for and on behalf of the City of Livonia with AT&T Wireless Services, and to do all other things necessary or incidental to the full performance of this resolution.

FEB 11 1998

A roll call vote was taken on the foregoing resolution with the following result:

AYES: Vandersloot, Pastor, and Engebretson.

NAYS: Brosnan and Laura.

The President declared the resolution adopted.

Councilmember Laura questioned the vote outcome and the Chair made a ruling that the resolution passed 3-2.

FEB 11 1998

On a motion by Laura, seconded by (none), it was:

RESOLVED, that the Council does hereby appeal the ruling of the Chair on the aforementioned resolution.

The President relinquished the Chair to Councilmember Brosnan at 8:55 p.m.

A roll call vote was taken with respect to the appeal with the following result:

AYES: Laura.

NAYS: Engebretson, Vandersloot, Pastor, and Brosnan.

Councilmember Brosnan declared the appeal denied.

Vice President Walsh returned to the podium at 8:58 p.m.

The President resumed the Chair at 8:58 p.m.

John Walsh
Conflict of
Interest

DEPARTMENT OF LAW

CITY ATTORNEY
Sean P. Kavanagh

CHIEF ASSISTANT CITY ATTORNEY
Cathryn K. White

ASSISTANT CITY ATTORNEY
Michael E. Fisher

ASSISTANT CITY ATTORNEY
Barbara J. Scherr

RECEIVED
CLERK'S OFFICE
10 PM 12: 20

Jack E. Kirksey
MAYOR

33000 CIVIC CENTER DRIVE
LIVONIA, MICHIGAN 48154-3097
(734) 466-2520
FAX: (734) 421-4870

NEW DATA ATTACHED

February 10, 1998

TO: HONORABLE MEMBERS OF THE CITY COUNCIL

FROM: DEPARTMENT OF LAW

SUBJECT: AT & T Cellular Tower Lease Amendment - Additional Data
Regular Meeting of February 11, 1998 - Item #18

Dear Council Members:

Please find attached a tower study that was conducted by AT&T Wireless Services, dated December 8, 1997, at no charge to the City.

Very truly yours,

Sean P. Kavanagh, City Attorney

APPROVED FOR SUBMISSION:

Jack E. Kirksey, Mayor

SPK:mr
Attachment

cc: Mayor, Clerk, Council, Finance, Parks and Recreation, Chief of Police

k-5:council\at&tlea p2

TOW. HT. + TYPE	300' S.S. TOWER
SITE NAME	LIVONIA - AMS SITE 19101
LOCATION	LIVONIA, MI
MANF. / MODEL	ROHN - SSVMN
YEAR BUILT	OCT 94
ORIG. DESIGN	EIA-RS222-E- 80 MPH + 1/2" ICE
PRESENT ANALYSIS	TIA/EIA-222-F - 75 MPH + 1/2" ICE

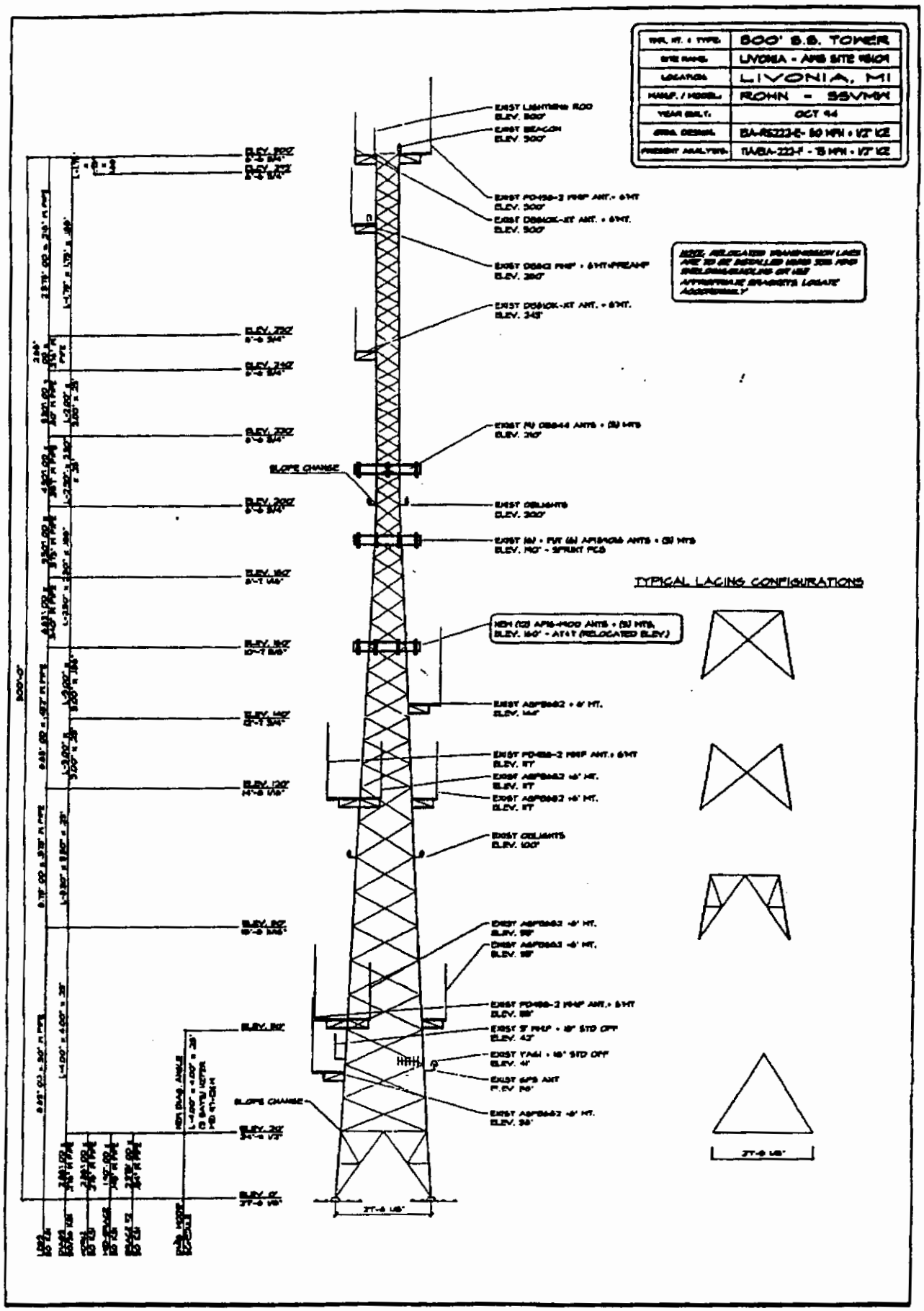

MALOUF ENGINEERING INTL, INC. STRUCTURAL CONSULTANTS	TOWER ELEVATION & SECTION 300' S.S. TOWER AT&T WIRELESS SERVICES SOUTHFIELD MICHIGAN	REVISIONS	DRAWN BY: RS ENG'D. BY: RS APP'D. BY: MH	JOB NO. 97-484 DATE 12/08/97	SHEET NO. 1 OF 1

3109

LIVONIA POLICE DEPARTMENT
TOWER MAPPING SITE #3109
ROHN SELF SUPPORTING TOWER

#	HEIGHT	AZMUTH	SIDEARM	LINE SIZE	ANTENNAS	MODEL #
1.)	38 FT	NORTH LEG	6 FT. ROHN ARM	RG 6	1	
2.)	38 FT	WEST LEG	6 FT. ROHN ARM	7/8"	1	ASPB-682
3.)	41 FT	EAST LEG	18 INCH STANDOFF	7/8"	1	YAGI
4.)	42 FT		18 INCH STANDOFF	RG 213	1	3 FT. WHIP
5.)	53 FT	EAST LEG	6 FT. ROHN ARM	7/8"	1	458-2
6.)	53 FT	NORTH LEG	6 FT. ROHN ARM	7/8"	1	ASPB-682
7.)	53 FT	WEST LEG	6 FT. ROHN ARM	7/8"	1	ASPB-682
8.)	97 FT (THIS SECTOR TO MOVE TO 160' LEVEL) AWS ANTENNA	NORTH, EAST, WEST LEG	SECTOR FRAMES ROHN	7/8" & 1 5/8"	9 & 12	AP~~1~~1900 AWS/0908 12
9.)	117 FT	NORTH LEG	6 FT. ROHN ARM	7/8"	1	ASPB682
10.)	117 FT	EAST LEG	6 FT. ROHN ARM	7/8"	1	ASPB682
	117 FT	WEST LEG	6 FT. ROHN ARM	7/8"	1	458-2
	144 FT	EAST LEG	6 FT. ROHN ARM	7/8"	1	ASPB682
11.)	190 FT	NORTH, EAST, WEST LEG	SECTOR FRAMES (3)	1 5/8"	6	AP189016-4
12.)	210 FT	NORTH, EAST, WEST LEG	SECTOR FRAMES (3)	1 5/8"	9	DB844880-XY
13.)	245 FT	WEST LEG	6 FT. ROHN SIDE-ARM	1 5/8"	1	DB810K-XT
14.)	280 FT (HAS PRE-AMP MOUNTED A FOOT ABOVE SIDE ARM)	WEST LEG	6 FT. ROHN SIDE-ARM	1 5/8"	1	DB812K-XT
15.)	295 FT	NORTH LEG	6 FT. ROHN SIDE-ARM	1 5/8"	1	458-2
16.)	295 FT	EAST LEG	6 FT. ROHN SIDE-ARM	1 5/8"	1	DB810K-XT

DEPARTMENT OF LAW

CITY ATTORNEY
Sean P. Kavanagh

CHIEF ASSISTANT CITY ATTORNEY
Cathryn K. White

ASSISTANT CITY ATTORNEY
Michael E. Fisher

ASSISTANT CITY ATTORNEY
Barbara J. Scherr

Jack E. Kirksey
MAYOR

33000 CIVIC CENTER DRIVE
LIVONIA, MICHIGAN 48154-3097
(313) 466-2520
FAX: (313) 421-4870

98 JAN 26 PM 3:37

January 23, 1998

TO: HONORABLE MEMBERS OF THE CITY COUNCIL

FROM: DEPARTMENT OF LAW

SUBJECT: Cellular Tower Antennae - Livonia Police Station Site

Dear Council Members:

We have reached a preliminary agreement with AT&T Wireless Services to modify the lease agreement previously entered into for space on the cellular tower located behind the police station. AT&T desires to raise their antennae array from the 100' level to the 145' - 155' level After negotiations, AT&T has agreed to pay the City a one time fee of $15,000.00. The lea terms, including the monthly rental previously agreed to, will continue.

We request that the City Council place this item on the next Council study meeting for consideration. Two (2) uses have been identified for the AT&T monies; $7,500.00 t new playground equipment for the McNamara/Bicentennial Park adjacent to the F Course, and $7,500.00 to be used to construct a pavilion at the police gun range willing to pay the $15,000.00 fee immediately after Council approval.

APPROVED FOR SUBMISSION:

Jack E. Kirksey, Mayor

Very truly yours,

Sean P. Kavanagh, C

SPK:mv

cc: Mayor, Clerk, Council, Police Chief, Superintend
Finance Director

26b:AT&T

DEPARTMENT OF LAW

CITY ATTORNEY
Sean P. Kavanagh

CHIEF ASSISTANT CITY ATTORNEY
Cathryn K. White

ASSISTANT CITY ATTORNEY
Michael E. Fisher

ASSISTANT CITY ATTORNEY
Barbara J. Scherr

Jack E. Kirksey
MAYOR

33000 CIVIC CENTER DRIVE
LIVONIA, MICHIGAN 48154-3097
(313) 466-2520
FAX: (313) 421-4870

December 26, 1997

AT&T Wireless
26877 Northwestern Hwy., Suite 350
Southfield, MI 48034
Attn: Mr. Anthony Amin

Re: Cellular Tower Antennae - Livonia Police Station Site

Dear Mr. Amin:

Confirming our telephone conversation of December 19, 1997, I indicated to you that the City of Livonia, subject to City Council and Mayoral approval, will allow AT&T Wireless to move its antennas currently situated at the 100 foot level of the police station tower to the 147 foot level (approximately). In exchange for this lease modification, AT&T Wireless will; 1) provide an equipment study of the tower to determine and identify present users and equipment (already provided); 2) move the City's antennae to another location as directed by Mr. Joe Sellinger at no expense to the City; and 3) pay the City a one time fee of $15,000.00 either by check within 30 days of Council approval, or by supplying $7,500.00 worth of playground equipment to the Livonia Parks and Recreation Department and $7,500.00 worth of construction materials and labor for installation of a pavilion at the police gun range.

If the above proposal and affirmation is acceptable to AT&T Wireless, please indicate in writing your acceptance and preferred method of payment as soon as possible. Upon receipt, we will submit the proposal to the Livonia City Council at the next available meeting. Thank you.

Very truly yours,

Sean P. Kavanagh, City Attorney

SPK:kp

cc: Mayor, City Clerk, City Council, Finance, Police - Chief Murray,
Parks and Recreation - Ron Reinke

k-5:spk\ltr\AT&T

Recycled Paper

AT&T Wireless Services
Suite 350
26877 Northwestern Hwy.
Southfield, MI 48034
248 386-7000
FAX 248 386-7007

January 22, 1998

Mr. Sean P. Kavanagh
City Attorney
City of Livonia
33000 Civic Center Drive
Livonia, MI 48154-3097

RE: CELLULAR TOWER ANTENNAE - LIVONIA POLICE STATION SITE

Dear Mr. Kavanagh:

Please allow this correspondence to summarize our understanding with regards to your correspondence dated December 26, 1997. Please review same at your earliest convenience.

AT&T Wireless Services (AWS) agrees to provide the City of Livonia a one time fee of Fifteen Thousand ($15,000.00) Dollars in exchange for a lease modification allowing AWS to move its antennas from the current 100' level to a new level of 145' - 155'. For this contribution, AWS would appreciate an expeditious response form the Livonia City Council since we believe it to be only an administrative matter. We would like to have this item submitted for approval by the City Council at the earliest opportunity which we believe would be the regular meeting on January 28, 1998. Upon receipt of all necessary City approvals, AWS will provide a check to the City of Livonia.

I trust this is complete for your purposes; however, if there are any questions or if additional information is needed, please feel free to contact me at (248) 386-7006. Thank you for your consideration in this matter.

Sincerely,

AT&T WIRELESS SERVICES

Anthony M. Amine
Director of Site Acquisition

Recycled Paper

DEPARTMENT OF LAW

CITY ATTORNEY
Sean P. Kavanagh

CHIEF ASSISTANT CITY ATTORNEY
Cathryn K. White

ASSISTANT CITY ATTORNEY
Michael E. Fisher

ASSISTANT CITY ATTORNEY
Barbara J. Scherr

Jack E. Kirksey
MAYOR

33000 CIVIC CENTER DRIVE
LIVONIA, MICHIGAN 48154-3097
(313) 466-2520
FAX: (313) 421-4870

97 DEC 26 PM 4:31

December 26, 1997

AT&T Wireless
26877 Northwestern Hwy., Suite 350
Southfield, MI 48034
Attn: Mr. Anthony Amin

Re: Cellular Tower Antennae - Livonia Police Station Site

Dear Mr. Amin:

Confirming our telephone conversation of December 19, 1997, I indicated to you that the City of Livonia, subject to City Council and Mayoral approval, will allow AT&T Wireless to move its antennas currently situated at the 100 foot level of the police station tower to the 147 foot level (approximately). In exchange for this lease modification, AT&T Wireless will; 1) provide an equipment study of the tower to determine and identify present users and equipment (already provided); 2) move the City's antennae to another location as directed by Mr. Joe Sellinger at no expense to the City; and 3) pay the City a one time fee of $15,000.00 either by check within 30 days of Council approval, or by supplying $7,500.00 worth of playground equipment to the Livonia Parks and Recreation Department and $7,500.00 worth of construction materials and labor for installation of a pavilion at the police gun range.

If the above proposal and affirmation is acceptable to AT&T Wireless, please indicate in writing your acceptance and preferred method of payment as soon as possible. Upon receipt, we will submit the proposal to the Livonia City Council at the next available meeting. Thank you.

Very truly yours,

Sean P. Kavanagh, City Attorney

SPK:kp

cc: Mayor, City Clerk, City Council, Finance, Police - Chief Murray,
Parks and Recreation - Ron Reinke

k-5:spk\ltr\AT&T

Recycled Paper

Revised 2/4/98

CELLULAR TOWERS
LIVONIA, MICHIGAN

NEW DATA
ATTACHED

RECEIVED
98 FEB 11 PM 3:30

PREPARED FOR
THE
LIVONIA CITY COUNCIL
AND
LIVONIA CITY PLANNING COMMISSION

PREPARED BY
THE
LIVONIA PLANNING DEPARTMENT

MAYOR

Jack E. Kirksey

CITY COUNCIL

Jack Engebretson, ***President***

John Walsh, ***Vice President***

Maureen Miller Brosnan

Brian Duggan

Joe Laura

John Pastor

Val Vandersloot

CITY CLERK

Joan McCotter

TREASURER

Laura M. Toy

PLANNING COMMISSION

James C McCann, ***Chairman***

Robert Alanskas , ***Vice Chairman***

C. Daniel Piercecchi , ***Secretary***

Elaine Koons

Michael S. Hale

William LaPine

PLANNING DEPARTMENT

Administration
John J. Nagy, Planning Director

Planners
S. Allen Nowak, Planner IV
Scott Miller, Planner II
William H. Poppenger, Jr., Planner I, Project Principle

Clerical
Doris E. Urbanski, Program Supervisor
Robby Williams, Clerk-Steno II

C:doc4doc whp 2/ 4/ 98

WIRELESS COMMUNICATION FACILITIES

Location & Address	Type of Tower and Colocater available	Height of Tower	Single purpose or a colocater
Existing Cellular One			
1. El Nibble Nook Restaurant 27725 Eight Mile Road	monopole & no	120'	single
2. Data Techniques Inc. 31835 Eight Mile Road	monopole & no	120'	single
3. Botsford Park & Pool 19444 Lathers	monopole & no	120'	single
4. Schoolcraft College 18600 Haggerty	monopole & no	120'	single
5. Laurel Park Office III 17197 N. Laurel Park Dr..	attached to bldg. & yes	roof top	single
6. Phillips Plumbing 17201 Middlebelt	monopole & no	120'	single
7. Nagle Paving Co. 13055 Levan	monopole & no	120'	single
8. Certified Celings & Walls 33026 Capital	monopole & no	120'	single
9. Secured Self Storage 12775 Inkster Road	monopole & no	120'	single
10. United Parcel 30422 Industrial Road	monopole & no	120'	single
Proposed Cellular one			

Location & Address	Type of Tower and Colocater available	Height of Tower	Single purpose or a colocater
Existing Ameritech Mobile Communications AMCI's			
11. Mini U Storage 32455 Eight Mile Road	monopole & no	120'	single
12. Stevenson High School 33620 Six Mile Road	monopole & no	120'	single
13. Joe's Trailers 13374 Farmington Road	monopole & no	120'	single
14. CAN-AM Eng. Products 30850 Industrial Road	monopole & no	120'	single
15. Luwall Investment Co. 13329 Inkster	monopole & no	120'	single
Existing AT & T			
16. Wayne Co. Hines Pkwy. 9150 Stark Road	monopole & no	120'	single
17. Livonia Civic Center 15050 Farmington Road	lattace & yes	300'	colocater
18. Knights of Columbus (ste.3108) 39050 Schoolcraft	monopole & yes	120'	colocater
Proposed AT & T			

Location & Address	Type of Tower and Colocater available	Height of Tower	Single purpose or a colocater
Existing Nextel Towers			
19. Livonia Civic Center 15050 Farmington Road	lattace & yes	300'	colocater
20. Whispering Willows Golf Course 37305 Eight Mile Road	lattace & Yes	145'	colocater
21. K of C Hall 38435 Schoolcraft	monopole & Yes	130'	colocater
Existing Sprint Spectrum LP			
22. Laurel Park Office III 17197 N. Laurel Park Drive	rooftop & No	10'	single
23. Livonia Civic Center 15050 Farminton Road	lattace & Yes	300'	colocater
24. Data Techniques Inc. 120' 31835 Eight Mile Road	monopole & Yes	120'	colocater

Cellular One
26935 Northwestern Hwy.
Southfield, Mich 48034

Ameritech Mobil Communications
32255 Northwestern Hwy.
Farmington Hills, Mich. 48334

AT & T Wireless Services Inc.
26877 Northwestern Hwy.
Suite 350
Southfield, Mich. 48034

Nextel Communications
300 Galleria Officecentre
Southfield, Mich. 48034

Sprint Spectrum
200 Galleria Officecentre
Suite 125
Southfield, Mich. 48034

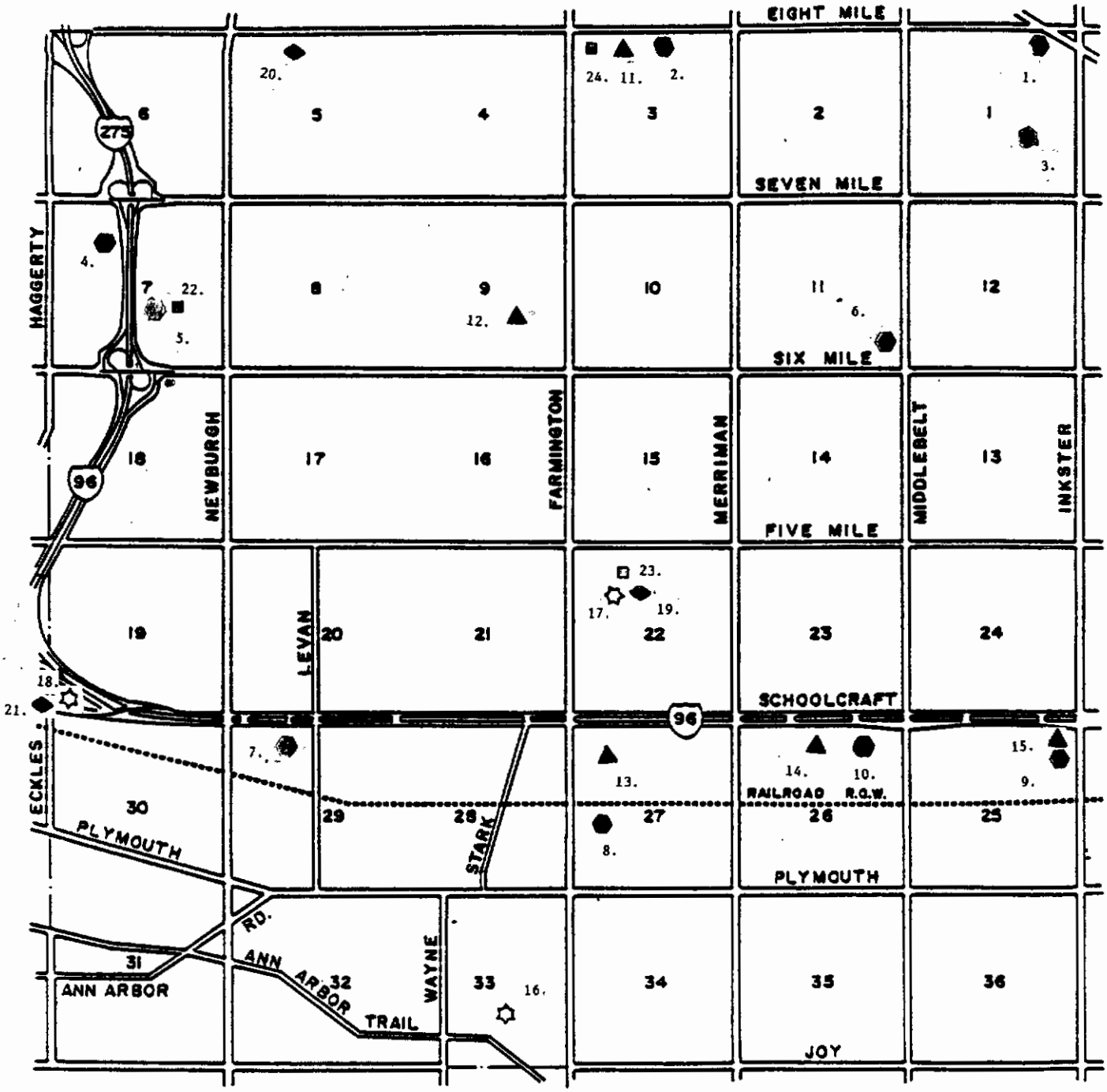

LEGEND

- Existing Cellular One Sites
- Proposed Cellular One Sites
- Existing AMCI Sites
- Proposed Amci Sites
- Existing AT & T Sites
- Proposed AT & T Sites
- Existing Nextel Sites
- Proposed Nextel Sites
- Existing Sprint Spectrum Sites
- Proposed Sprint Spectrum Sites

CELLULAR TOWERS

PREPARED BY LIVONIA CITY PLANNING DEPARTMENT

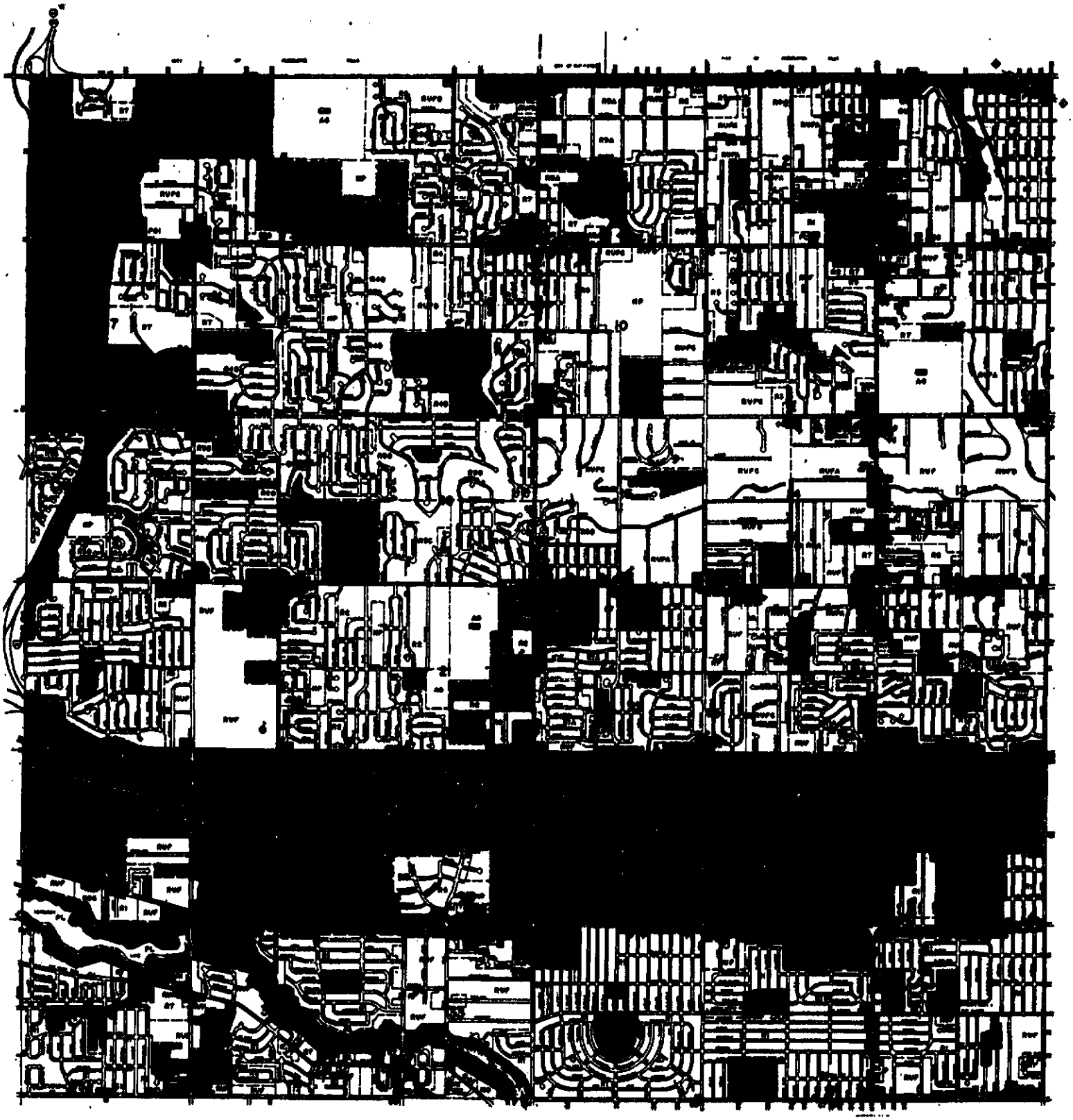

WIRELESS COMMUNICATION FACILITIES AUTHORIZATION MAP

LIVONIA, MICHIGAN

Permitted Uses	Permitted Uses must obtain owners approval	Waiver Uses	Special Waiver Uses

Wireless Communication Sites *(continued)*

Q. Why do wireless sites have to be a certain height?

PCS is a low-power, line-of-sight radio technology. Therefore, antennas must be elevated to ensure that the radio waves have a clear path of transmission and are not obstructed by hills, high buildings or other structures. The optimum height of a site, usually between 100 and 150 feet, depends on the topography of the land where it will be located.

Q. At what power level does a typical site operate?

PCS radio links operate at very low power levels - typically 100 watts or less per channel, the same wattage as an ordinary household light bulb. In comparison, a television tower may emit up to 5 million watts and a commercial FM radio station may operate at 100,000 watts of power.

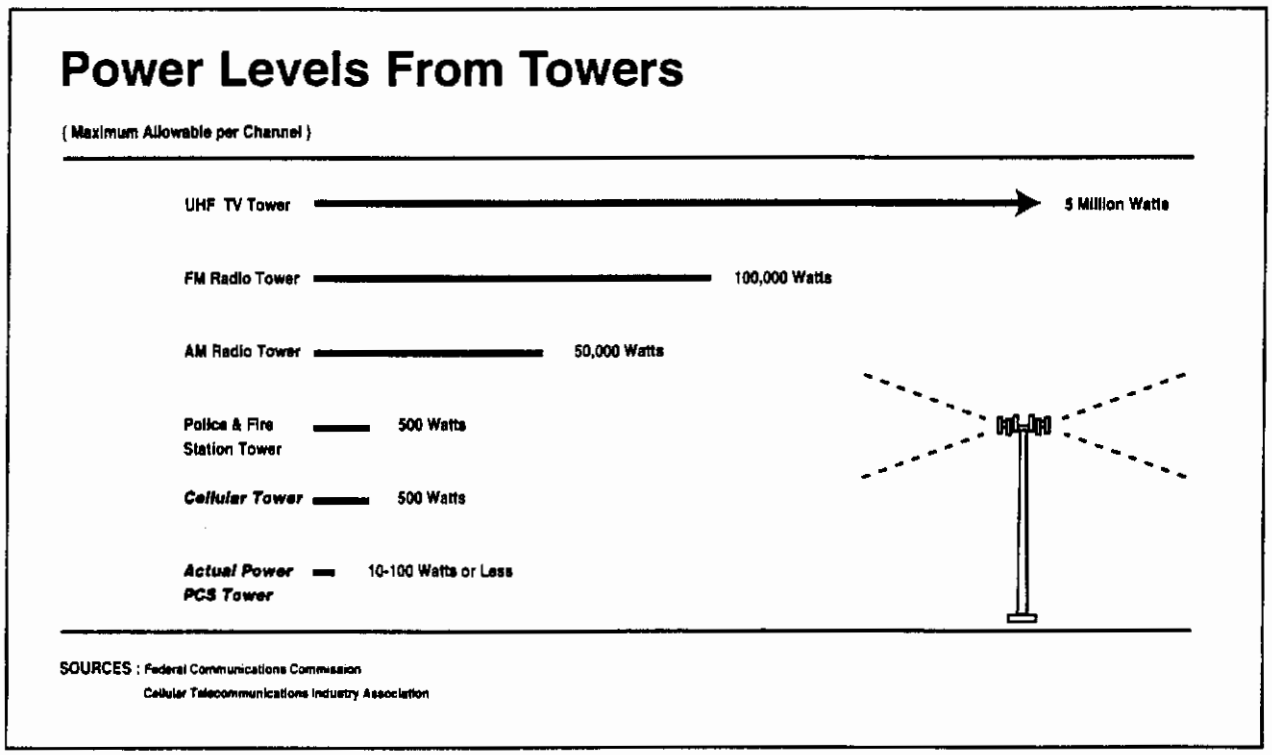

EXHIBIT D

SCHEDULE OF RENTS

PERIOD					ANNUAL RENT
INITIAL TERM					
February 1,	1997	TO	January 31,	1998	$24,000
February 1,	1998	TO	January 31,	1999	24,960
February 1,	1999	TO	January 31,	2000	25,958
February 1,	2000	TO	January 31,	2001	26,997
February 1,	2001	TO	January 31,	2002	28,077
1ST FIVE YEAR EXTENSION					
February 1,	2002	TO	January 31,	2003	29,200
February 1,	2003	TO	January 31,	2004	30,368
February 1,	2004	TO	January 31,	2005	31,582
February 1,	2005	TO	January 31,	2006	32,846
February 1,	2006	TO	January 31,	2007	34,159
2ND FIVE YEAR EXTENSION					
February 1,	2007	TO	January 31,	2008	35,526
February 1,	2008	TO	January 31,	2009	36,947
February 1,	2009	TO	January 31,	2010	38,425
February 1,	2010	TO	January 31,	2011	39,962
February 1,	2011	TO	January 31,	2012	41,560
3RD FIVE YEAR EXTENSION					
February 1,	2012	TO	January 31,	2013	43,223
February 1,	2013	TO	January 31,	2014	44,952
February 1,	2014	TO	January 31,	2015	46,750
February 1,	2015	TO	January 31,	2016	48,620
February 1,	2016	TO	January 31,	2017	50,564
GRAND TOTAL					$714,674

c: COUNCIL JEK:s 2/10/98

Original to Finance

AT&T

18

AT&T Wireless Services
Suite 350
26877 Northwestern Hwy.
Southfield, MI 48034
248 386-7000
FAX 248 386-7007

January 29, 1998

City of Livonia
15050 Farmington Road
Livonia, MI 48154

NEW DATA ATTACHED

98 FEB 10 AM 8:49

Re: **AT&T Site 3109B**
15080 Farmington Road

To whom it may concern:

Please find a check in the amount of Twenty Four Thousand Nine Hundred and Sixty ($24,960.00) Dollars enclosed for your annual rent.

I trust the enclosed is accurate and complete for your purposes; however, if there are any questions or if additional information is needed, please feel free to contact me at 248-386-7053.

Very truly yours,

AT&T WIRELESS SERVICES

Liz S. Lanni
Site Acquisition

Enclosure

Recycled Paper

PAYMENT DATE	CONTROL NUMBER	VENDOR NAME	VENDOR NUMBER
27-JAN-98		CITY OF LIVONIA	10000059

INVOICE NUMBER	INVOICE DATE	DESCRIPTION	DISCOUNT	NET
98ANNUAL	26-JAN-98	ANNUAL RENT 02/01/98-01/31/99 3	0.00	24,960.00

3109

0.00	24,960.00

THE FACE OF THIS DOCUMENT HAS A COLORED BACKGROUND WITH AN ARTIFICIAL WATERMARK AND SAFETY PANTOGRAPH ON THE REVERSE SIDE.

AT&T

AT&T Wireless Services
CENTRAL REGION
2630 LIBERTY AVENUE
PITTSBURGH, PA 15222
(412) 471-4400

SEAFIRST BANK
DISBURSEMENT ACCOUNT

86-156
531

8072747

CHECK DATE	CHECK NUMBER	AMOUNT
27-JAN-98	8072747	*****24,960.00

PAY EXACTLY

Twenty-Four Thousand Nine Hundred Sixty Dollars And 00 Cents******

TO THE ORDER OF

CITY OF LIVONIA
15050 FARMINGTON ROAD
LIVONIA, MI 48154

FIRST UNION NATIONAL BANK
CHAPEL HILL, N.C.

AUTHORIZED SIGNATURE
NOT VALID AFTER 90 DAYS

⑈08072747⑈ ⑆053101561⑆ 2079985253011⑈

FAX

RECEIVED
CITY CLERK'S OFFICE
FEB 6 PM 4:52

Date 02/06/98

Number of pages including cover sheet 3

TO: *Honorable City Council Members*
City of Livonia

Phone
Fax Phone *734-421-4388*

FROM: *Liz Lanni*
AT&T Wireless Services
26877 Northwestern Highway
Suite 350
Southfield, Michigan 48334

Phone *248-386-7053*
Fax Phone *248-386-7006*

CC:

REMARKS: ☐ *Urgent* ☐ *For your review* ☐ *Reply ASAP* ☐ *Please Comment*

NEW DATA ATTACHED

AT&T

AT&T Wireless Services
Suite 350
26877 Northwestern Hwy.
Southfield, MI 48034
810 386-7000
FAX 810 386-7007

February 6, 1998

Mr. Sean P. Kavanagh
City Attorney
City of Livonia
33000 Civic Center Drive
Livonia, MI 48154-3097

RE: CELLULAR TOWER ANTENNAE - LIVONIA POLICE STATION SITE

Dear Mr. Kavanagh:

Please allow this correspondence to provide information that was requested at the Livonia City Council meeting of February 2, 1998. Please review same at your earliest convenience and let me know if you have any further questions.

I have listed below municipalities with the appropriate contact person and telephone number for sites where AT&T Wireless Services (AWS) entered into a Lease Agreement and then had to raise the height of the antennas on the existing monopole. No charge was assessed by any listed municipality in connection with movement of the antennas. Moreover AT&T has never been required to pay a municipality for movement of antennas.

City of Walled Lake - Miles Davis (248) 624-4847
Grosse Isle Fire Department - Ken Fisher (313) 676-7100
City of Northville - Gary Word (248) 349-3271
City of Troy - Peter Letzmann (248) 524-3320
Shelby Township - Mark Schmidt (810) 726-7241
City of Sterling Heights - (Outside City Attorney) - Clark Andrews - (810) 726-1000

AWS looks forward to the appropriate information being relayed to the Livonia City Council in order for them to make an educated decision on this matter. AWS is still willing to abide by the original terms of our "agreement" as long as the City Council moves in an expeditious manner. We believe that the proposed agreement is a very equitable deal for the City of Livonia, taken together with our performance of the tower survey and our commitment to move city equipment located on the tower. Our requested services and cash payment represent value in excess of $17,000.00

Recycled Paper

I trust this is complete for your purposes; however, if there are any questions or if additional information is needed, please feel free to contact me at (248) 386-7006. Thank you for your consideration in this matter.

Sincerely,

AT&T WIRELESS SERVICES

Anthony M. Amine
Director of Site Acquisition

cc: The Honorable Jack Kirksey
The Honorable Livonia City Council Members

DEPARTMENT OF LAW

CITY ATTORNEY
Sean P. Kavanagh
CHIEF ASSISTANT CITY ATTORNEY
Cathryn K. White
ASSISTANT CITY ATTORNEY
Michael E. Fisher
ASSISTANT CITY ATTORNEY
Barbara J. Scherr

98 FEB -9 PM 4:28

Jack E. Kirksey
MAYOR

98 FEB -9 PM 4:42

NEW DATA ATTACHED

33000 CIVIC CENTER DRIVE
LIVONIA, MICHIGAN 48154-3097
(313) 466-2520
FAX: (313) 421-4870

February 9, 1998

This item has been scheduled as
Public:
Study Meeting _____
Regular Meeting 2/11/98 #18
Other _____
Copies to _____

TO: HONORABLE MEMBERS OF THE CITY COUNCIL

FROM: DEPARTMENT OF LAW

SUBJECT: AT & T Cellular Tower Lease Amendment
Regular Meeting of February 11, 1998 - Item #18

Dear Council Members:

Pursuant to the Council's request, we have contacted several municipalities to inquire about payment made for relocation of existing cellular tower antennaes.

We contacted Schoolcraft College, Livonia Public Schools, Farmington Hills, City of Walled Lake, Grosse Ile Fire Department, and the City of Troy. None of those entities has ever been paid by a provider for permission to relocate an existing antennae array on the same tower.

I am enclosing a copy of a letter from Mr. Anthony Amine of AT & T which indicates that in at least six communities no charge was made for permission to move antennaes. Based upon this additional information, we again recommend that the City Council approve the lease amendment, accept the $15,000.00 payment, and appropriate the funds as requested in our previous correspondence.

APPROVED FOR SUBMISSION:

Jack E. Kirksey, Mayor

Very truly yours,

Sean P. Kavanagh, City Attorney

SPK:kp
Attachment

cc: Mayor, Clerk, Council, Finance, Parks and Recreation, Chief of Police, Anthony Amine

k-5:council\at&tlea

AT&T Wireless Services
Suite 350
26877 Northwestern Hwy.
Southfield, MI 48034
810 386-7000
FAX 810 386-7007

February 6, 1998

RECEIVED
FEB 6 1998
DEPARTMENT OF LAW
CITY OF LIVONIA

Mr. Sean P. Kavanagh
City Attorney
City of Livonia
33000 Civic Center Drive
Livonia, MI 48154-3097

RE: CELLULAR TOWER ANTENNAE - LIVONIA POLICE STATION SITE

Dear Mr. Kavanagh:

Please allow this correspondence to provide information that was requested at the Livonia City Council meeting of February 2, 1998. Please review same at your earliest convenience and let me know if you have any further questions.

I have listed below municipalities with the appropriate contact person and telephone number for sites where AT&T Wireless Services (AWS) entered into a Lease Agreement and then had to raise the height of the antennas on the existing monopole. No charge was assessed by any listed municipality in connection with movement of the antennas. Moreover AT&T has never been required to pay a municipality for movement of antennas.

City of Walled Lake - Miles Davis (248) 624-4847
Grosse Isle Fire Department - Ken Fisher (313) 676-7100
City of Northville - Gary Word (248) 349-3271
City of Troy - Peter Letzmann (248) 524-3320
Shelby Township - Mark Schmidt (810) 726-7241
City of Sterling Heights - (Outside City Attorney) - Clark Andrews - (810) 726-1000

AWS looks forward to the appropriate information being relayed to the Livonia City Council in order for them to make an educated decision on this matter. AWS is still willing to abide by the original terms of our "agreement" as long as the City Council moves in an expeditious manner. We believe that the proposed agreement is a very equitable deal for the City of Livonia, taken together with our performance of the tower survey and our commitment to move city equipment located on the tower. Our requested services and cash payment represent value in excess of $17,000.00

Recycled Paper

I trust this is complete for your purposes; however, if there are any questions or if additional information is needed, please feel free to contact me at (248) 386-7006. Thank you for your consideration in this matter.

Sincerely,

AT&T WIRELESS SERVICES

Anthony M. Amine
Director of Site Acquisition

cc: The Honorable Jack Kirksey
The Honorable Livonia City Council Members

DEPARTMENT OF LAW

CITY ATTORNEY
Sean P. Kavanagh
CHIEF ASSISTANT CITY ATTORNEY
Cathryn K. White
ASSISTANT CITY ATTORNEY
Michael E. Fisher
ASSISTANT CITY ATTORNEY
Barbara J. Scherr

Jack E. Kirksey
MAYOR

33000 CIVIC CENTER DRIVE
LIVONIA, MICHIGAN 48154-3097
(734) 466-2520
FAX: (734) 421-4870

OFFICE OF THE CITY CLERK
FEB 10 PM 12:10
FEB 10 PM 12:19
NEW DATA ATTACHED
This item has been scheduled as
Regular Meeting
2/11/98 - #18

February 10, 1998

TO: HONORABLE MEMBERS OF THE CITY COUNCIL

FROM: DEPARTMENT OF LAW

SUBJECT: AT & T Cellular Tower Lease Amendment - Additional Data
Regular Meeting of February 11, 1998 - Item #18

Dear Council Members:

Please find attached a tower study that was conducted by AT&T Wireless Services, dated December 8, 1997, at no charge to the City.

Very truly yours,

Sean P. Kavanagh, City Attorney

APPROVED FOR SUBMISSION:

Jack E. Kirksey, Mayor

SPK:mr
Attachment

cc: Mayor, Clerk, Council, Finance, Parks and Recreation, Chief of Police

k-5:council\at&tlea p2

TWR. HT. & TYPE:	300' S.S. TOWER
SITE NAME:	LIVONIA - APS SITE #8104
LOCATION:	LIVONIA, MI
MANUF. / MODEL:	ROHN - SSVMW
YEAR BUILT:	OCT 94
ORIG. DESIGN:	EIA-RS222-E- 80 MPH + 1/2" ICE
PRESENT ANALYSIS:	TIA/EIA-222-F - 75 MPH + 1/2" ICE

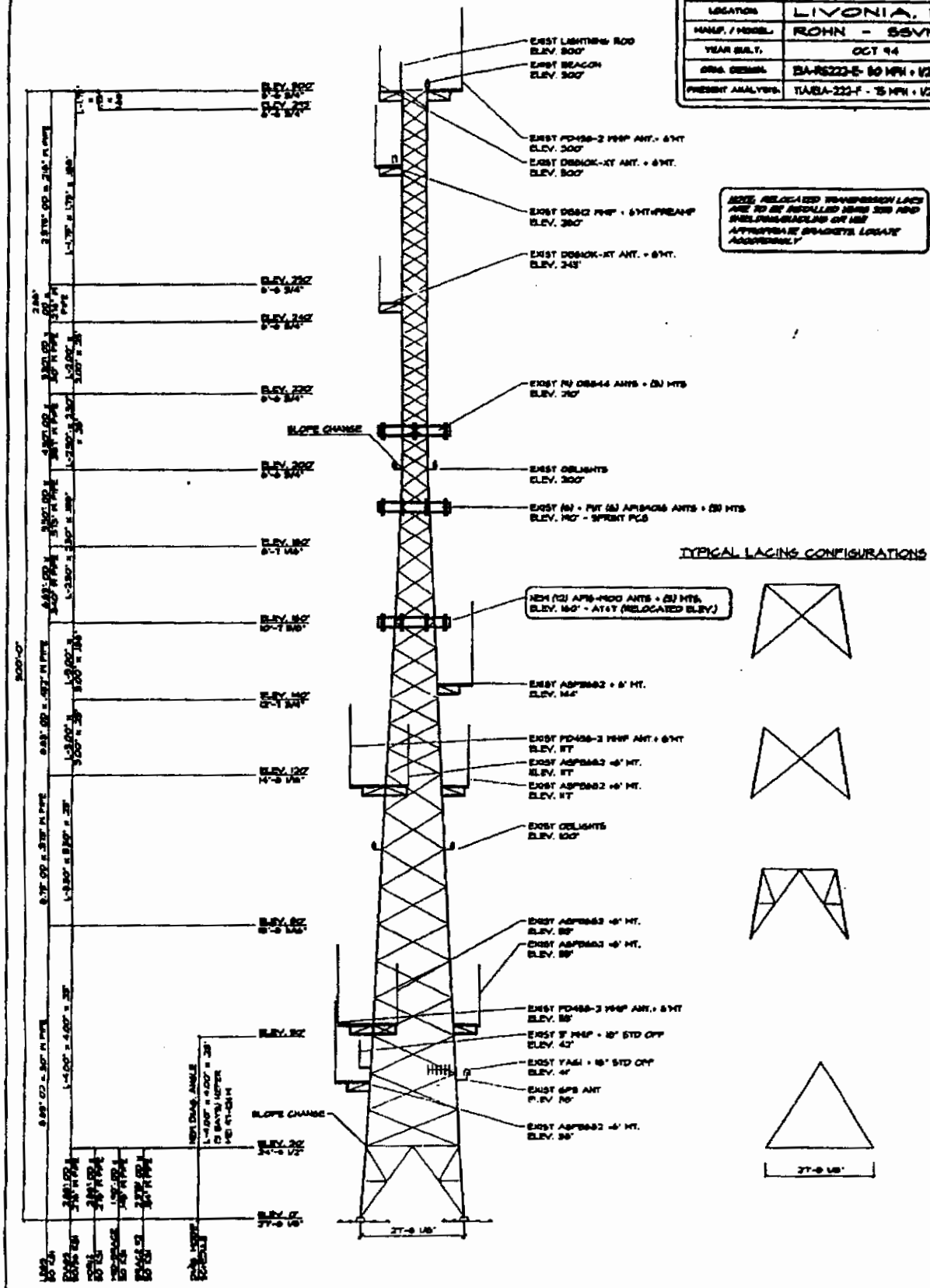

MALOUF ENGINEERING INTL. INC.
STRUCTURAL CONSULTANTS

TOWER ELEVATION & SECTION
300' S.S. TOWER
AT&T WIRELESS SERVICES
SOUTHFIELD MICHIGAN

REVISIONS

DRAWN BY: RS
ENG'D. BY: RS
APP'D. BY: HM

JOB NO. 97-484

DATE 12/08/97

SHEET NO. 1 OF 1

3109

LIVONIA POLICE DEPARTMENT
TOWER MAPPING SITE #3109
ROHN SELF SUPPORTING TOWER

#	HEIGHT	AZMUTH	SIDEARM	LINE SIZE	ANTENNAS	MODEL #
1.)	38 FT	NORTH LEG	6 FT. ROHN ARM	RG 6	1	
2.)	38 FT	WEST LEG	6 FT. ROHN ARM	7/8"	1	ASPB-682
3.)	41 FT	EAST LEG	18 INCH STANDOFF	7/8"	1	YAGI
4.)	42 FT		18 INCH STANDOFF	RG 213	1	3 FT. WHIP
5.)	53 FT	EAST LEG	6 FT. ROHN ARM	7/8"	1	458-2
6.)	53 FT	NORTH LEG	6 FT. ROHN ARM	7/8"	1	ASPB-682
7.)	53 FT	WEST LEG	6 FT. ROHN ARM	7/8"	1	ASPB-682
8.)	97 FT (THIS SECTOR TO MOVE TO 160' LEVEL) AWS ANTENNA	NORTH, EAST, WEST LEG	SECTOR FRAMES ROHN	7/8" & 1 5/8"	9 & 12	AP 1900 AWS/0908
9.)	117 FT	NORTH LEG	6 FT. ROHN ARM	7/8"	1	ASPB682
10.)	117 FT	EAST LEG	6 FT. ROHN ARM	7/8"	1	ASPB682
	117 FT	WEST LEG	6 FT. ROHN ARM	7/8"	1	458-2
	144 FT	EAST LEG	6 FT. ROHN ARM	7/8"	1	ASPB682
11.)	190 FT	NORTH, EAST, WEST LEG	SECTOR FRAMES (3)	1 5/8"	6	AP189016-4
12.)	210 FT	NORTH, EAST, WEST LEG	SECTOR FRAMES (3)	1 5/8"	9	DB844880-XY
13.)	245 FT	WEST LEG	6 FT. ROHN SIDE-ARM	1 5/8"	1	DB810K-XT
14.)	280 FT (HAS PRE-AMP MOUNTED A FOOT ABOVE SIDE ARM)	WEST LEG	6 FT. ROHN SIDE-ARM	1 5/8"	1	DB812K-XT
15.)	295 FT	NORTH LEG	6 FT. ROHN SIDE-ARM	1 5/8"	1	458-2
16.)	295 FT	EAST LEG	6 FT. ROHN SIDE-ARM	1 5/8"	1	DB810K-XT

OFFICE OF THE COUNCIL

33000 CIVIC CENTER DRIVE
LIVONIA, MICHIGAN 48154-3097

Anthony M. Amine
Director of Site Acquisition
AT&T Wireless Services
26877 Northwestern Highway
Suite 350
Southfield, MI 48034

11

On a motion by Feenstra, seconded by Brosnan, and unanimously adopted, it was:

JAN 29 1997

CELLULAR TOWERS
In conn. with AT&T Wireless PCS, Inc.'s lease agreement with the City for use of a portion of the radio tower at the Police Station, the Council determined to take **NO FURTHER ACTION** on subject of financial aspects associated with lease of space on City tower.

#61-97 RESOLVED, that having considered the report and recommendation of the Legislative Committee, dated January 21, 1997, submitted pursuant to Council Resolution 831-96, with respect to the subject of financial aspects associated with the lease of space on the City's communication tower, the Council does hereby determine to take no further action with respect to this matter.

17d

4.	CR-831-96 Subject of financial aspects associated with the lease of space on the City's communication tower for report and recommendation.

The Committee recommends:

- Adoption of a resolution of "No Further Action."

This item to be placed on the **Regular Meeting Agenda of January 29, 1997.**

MEMORANDUM

TO: Councilman Fernon Feenstra

FROM: Councilman Mike McGee

RE: Legislative Committee

DATE: January 21, 1997

Fernon:

I apologize for missing this evening's Committee meeting; I'm afraid duty calls as I must appear before the Mount Clemens City Commission to discuss the new Brownfield Redevelopment Authority Act.

I have taken a look at the Committee agenda materials and would ask for the following resolutions:

1. **Fence Ordinance**

A. *Setback.* As far as the specific regulation cited by Mr. Blomberg, I have no problem with making the allowance he suggests, i.e., granting relief from the setback requirements applicable to corner side yards.

B. *Consent to Privacy Fences.* I have one other point I would like to bring up, and that is the requirement of § 15.44.090 B. that privacy fences shall not be allowed within or abutting properties unless "written consent is obtained by the person erecting the fence from the adjoining property owner(s)."

The reason for the "written consent" requirement, as I recall it, was to require neighbors to talk things over and reach agreement before the fence goes in.

I agree with the notion that the neighbors should talk. The problem in practice with the current requirement, however, is that it gives all the leverage to the non-installing neighbor. Even in cases where the privacy fence is of appropriate appearance and quality, there is no incentive for the adjoining property owner to give a consent, let alone a written consent. This, it seems to me, is unfair to the property owner who wants to put up the fence, especially since their only remedy is to go before the ZBA. The ordinance in essence rewards bad behavior on the part of the non-installing neighbor.

I propose amending the requirement to eliminate the "written" consent, but adding a requirement that (1) the installing property owner give written notice to the abutting property owner, and (2) that consent will be conclusively presumed unless the abutting property owner files a written objection with the Inspection Department within some reasonable time, say, 30 days.

This would still require the neighbors to talk, since the installing property owner has the written notification requirement. And it would still protect the abutting property owner, since that person would have 30 days to object. But it would shift the consequence of doing nothing from the installing to the abutting property owner. This, it seems to me, is more fair to all concerned.

I therefore would ask for a resolution directing the Law Department to prepare an amendment to the foregoing effect.

C. *Privacy "Screens."* I also am not clear on the fence ordinance's application to the "privacy screen" (such as around a pool within a yard). The ordinance says that the privacy fence prohibition applies "within or abutting" property. If the "consent" procedure is applicable to fences and screens within an installing property owner's property, I think the "notice-and-presumed-consent" procedure outlined above should cover that case, too.

2. Fence Board of Appeals

I prefer the "hearing officer" option offered by the Law Department's August 5, 1996, letter. The hearing board could consist of 3 officers along the lines you have previously suggested. If a resolution to that effect is not asked for by someone else, I would ask for a resolution to the Law Department asking that such an ordinance amendment be prepared.

3. Council Member's Right To Put Items On Agenda

My position is the same as it was last year (see my memo of February 20, 1996): Council members by custom have always had the right to place specific items of interest on a Study agenda. Since we each represent the electorate, that right assures that each of us have an equal right to bring items of public interest before the Council as a whole.

To allow one person, such as the President, to arbitrarily prevent items from being placed on an agenda in essence gives that person 7 votes on that item. That is fundamentally unfair. Moreover it prevents issues from being debated publicly.

I therefore continue to support an amendment to our rules which codifies what (until 1996) had been the prevailing practice: each Council member has the right to place items at least on a Study agenda for public consideration.

4. Lease of Communication Tower

Since we recently approved the lease, I presume NFA is in order.

5. Commercial Real Estate Signs

I concur with the Planning Commission's recommendation and would support an approving resolution. If one is not asked for by someone else, I will ask for it.

I would appreciate it if you could distribute copies of this to the other Council members present tonight, as well as to Administration representatives present and to Karen. Thanks for the accommodation.

MPM

DEFS2\415427.1\088888-00422

CELULAR TOWERS
AT&T Wireless PCS, INC
Approval of lease agreement for 5 years, with option of 3 successive 5 yr. renewal periods, portion of radio tower at Police station, installation of equipment shelter at site, annual rent of $24,000 to City, annual rent to increase by 4% per year.

#18-97 RESOLVED, that having considered the report and recommendation of the Department of Law, dated December 3, 1996, approved by the Finance Director, and approved for submission by the Mayor, to which is attached a proposed lease agreement between the City of Livonia and AT&T Wireless PCS, Inc. for a period of five years, with the option of three successive five-year renewal periods, for use of a portion of the radio tower located at the Police Station and the installation of an equipment shelter at the site at an annual rent of $24,000.00 to be paid to the City (which amount shall be increased by 4% per year), the Council does hereby authorize the Mayor and City Clerk, for and on behalf of the City of Livonia, to execute the attached agreement in the manner and form herein submitted, as well as to do all things necessary or incidental to the full performance of this resolution.

JAN 15 1997

CONSENT AGENDA ITEM

Motion by: Taylor
Seconded by: McGee

ROLL CALL:
Ayes: Taylor, Duggan, Brosnan, Vandersloot, McGee and Laura.
Nays: None.
Absent: Feenstra (recovering from surgery).

DEPARTMENT OF LAW

CITY ATTORNEY
Sean P. Kavanagh

CHIEF ASSISTANT CITY ATTORNEY
Cathryn K. White

ASSISTANT CITY ATTORNEY
Michael E. Fisher

ASSISTANT CITY ATTORNEY
Barbara J. Scherr

Jack E. Kirksey
MAYOR

33000 CIVIC CENTER DRIVE
LIVONIA, MICHIGAN 48154-3097
421-2000, ext. 226-227
FAX: 421-4870

19

This item has been scheduled as follows:

Study Meeting

Regular Meeting

Other

Copies to

December 3, 1996

TO: HONORABLE MEMBERS OF THE CITY COUNCIL

FROM: DEPARTMENT OF LAW

SUBJECT: Proposed Lease Agreement between City of Livonia and AT&T Wireless, PCS, Inc. for use of a portion of City's Communications Tower Located at Police Department

REF: Council Resolution No. 890-96

Dear Council Members:

At your regular meeting of September 11, 1996, the subject of the proposed lease agreement between the City of Livonia and AT&T Wireless PCS, Inc. for use of a portion of the radio tower located at the Police Station was referred to this office for further negotiations with AT&T Wireless PCS, Inc. It is our understanding that the Council desired language in the lease agreement that would give the City the discretion to terminate the agreement at the end of the initial five (5) year term as well as at the end of any five (5) year extension.

AT&T Wireless PCS, Inc. representatives have agreed to this provision and pp 2 and 3 of the proposed Lease Agreement have been revised accordingly. In addition, Exhibit C has been revised to incorporate a more detailed site plan, which plan has been reviewed and approved by the Police Department and the administration. It is therefore recommended that the proposed Lease Agreement (as revised), a copy of which is submitted hereto for your consideration, be approved and that the following resolution be adopted:

> RESOLVED, that having considered the report and recommendation of the Department of Law, dated December 3, 1996, approved by the Finance Director, and approved for submission by the Mayor, to which is attached a proposed lease agreement between the City of Livonia and AT&T Wireless

Recycled Paper

PCS, Inc. for a period of five years with the option of three successive five-year renewal periods for use of a portion of the radio tower located at the police station and the installation of an equipment shelter at the site at an annual rent of $24,000.00 to be paid to the City (which amount shall be increased by 4% per year), the Council does hereby authorize the Mayor and City Clerk, for and on behalf of the City of Livonia, to execute the attached agreement in the manner and form herein submitted, as well as to do all things necessary or incidental to the full performance of this resolution.

APPROVED:

Michael T. Slater, Finance Director

Very truly yours,

Sean P. Kavanagh, City Attorney

APPROVED FOR SUBMISSION:

Jack E. Kirksey, Mayor

Cathryn K. White
Chief Assistant City Attorney

CKW/mb

Enclosure

cc: Mayor, Clerk, Council, Police
Finance, Engineering, Planning
Director of Public Works

21:\letters\at&tltr

LEASE AGREEMENT

This Lease Agreement, commences _____, between the CITY OF LIVONIA, a municipal corporation ("Landlord"), whose address is 33000 Civic Center Drive, Livonia, Michigan 48154, and AT&T Wireless PCS, Inc., a Delaware Corporation ("Tenant"), whose address is 26877 Northwestern Highway, Suite 350, Southfield, Michigan 48034.

RECITALS:

Landlord has legal title to real property (the "Site") located at the common address of 15050 Farmington Road, City of Livonia, Wayne County, State of Michigan, and a communications tower structure on that property (the "Tower"), portions of which Tenant wishes to lease from Landlord, for telecommunication purposes, which includes the transmission and reception of radio communication signals. The legal description of the site is shown on Exhibit "A." The portion of the Site and Tower which Landlord has agreed to lease to Tenant for the stated purposes is described on Exhibit "B," and is referred to in this lease as the "Premises."

NOW THEREFORE, for and in consideration of value received and the mutual promises contained in this Lease, Landlord and Tenant agree as follows:

1. Use of Leased Premises. This Lease of the Premises described in Exhibit "B" by Landlord to Tenant grants to Tenant, subject to restrictions or limitations contained in this Lease:

(a) The right to use vertical space on the Tower for the installation, maintenance and operation of up to nine (9) antennae, plus provisions for Omni whips mounted at a base height of 100 feet (plus or minus 15 feet)

on the Tower, with the top of the antennae to be no higher than 115 feet on the Tower, together with necessary transmission cables or lines no greater than two (2) inches in diameter. Detailed plans and specifications conforming to this provision are attached as Exhibit "C" and are hereby approved and accepted by Landlord. All antennae, cables or lines and related equipment installed on the Premises in accordance with this Lease are and shall remain Tenant's personal property.

(b) The right to construct or install, secure and use an equipment enclosure on the ground of the Premises provided it is not permanently attached to the land, the size and location being set forth in Exhibit "C."

(c) Access, utility and transmission line easements necessary for Tenant to use, enjoy and maintain its installations on the Premises.

(d) The right to install and maintain cables and transmission lines between the equipment enclosure and its installations on the Tower subject to Landlord's right to designate the route to be utilized, which shall be consistent with the accepted engineering practice, the Landlord's existing installations and primary purpose for which the Tower was constructed.

(e) The rights and access granted to Tenant are non-exclusive, Landlord hereby reserving the right to enter in and upon the Premises as provided in this Lease.

2. Term of Lease.

(a) The initial term of this Lease shall be five (5) years from commencement.

(b) Provided Tenant is not in default, the term of this Lease may be extended for up to three (3) additional and separate five (5) year terms. Landlord shall have the right, in its sole discretion, to terminate this lease at the conclusion of the initial five (5) year term or at the conclusion of any additional five (5) year extension by giving written notice to Tenant at least ninety (90) days prior to the end of the initial term or any extension thereof. If Landlord does not exercise its right to terminate this agreement at the conclusion of the initial term or any extension(s) thereof, the term of this lease shall be automatically extended for up to three (3) additional and separate five (5) year terms unless Tenant gives Landlord written notice of intention to terminate at least six (6) months prior to the end of each current term.

3. Rent and Lease Payments.

(a) The annual rental for the first year shall be Twenty-four Thousand Dollars ($24,000.00), with the annual rental for each subsequent year of the initial and extension terms to be increased by four percent (4%), as set forth on Exhibit "D."

(b) Annual rental payments shall be paid by Tenant to Landlord in advance on or before the commencement date of this Lease and each anniversary date thereafter at Landlord's address designated in this Lease or to such other person or location as Landlord designates in writing at least thirty (30) days prior to a rental payment due date.

(c) A payment of rent or other financial obligations of Tenant to Landlord more than five (5) days after it is due, shall be considered a default and include an administrative late charge equal to five percent (5%) of the required payment.

4. Utilities. Tenant shall be responsible for securing installation of separate lines and meters, and for all charges, fees and expenses for utility services for the leased Premises.

5. Installation, Alterations, Repairs and Maintenance.

(a) The equipment which Landlord has approved for placement or installation on the Premises by Tenant is described on Exhibit "C." In the ordinary course of business, Tenant may replace used, broken or obsolete equipment, without Landlord's consent, with equipment that has similar physical dimensions, characteristics and impact as the existing equipment. Tenant shall not install equipment in a manner which may adversely affect the physical and structural integrity and capacity of the Tower as designed, or that causes damage to Landlord's or other Tower users' property.

(b) Except for replacement in the ordinary course of business, Tenant shall not make any other alterations or improvements to the Premises without Landlord's prior written consent. Improvements added without the required consent shall become Landlord's property. Landlord shall not be required to consider any request by Tenant under this section unless it is accompanied by detailed plans and specifications, which, if approved, will serve as an amendment of Exhibit "C."

(c) Tenant's installation and operation of materials, equipment and fixtures shall be done in a neat, workmanlike manner, consistent with good engineering practices and without damage to the Site, Tower or property and operations of Landlord and other Site or Tower users. Subject to Section 7, Tenant shall promptly repair or correct any damages caused by its installations and operations.

(d) Subject to Section 11(g), Landlord, as the owner of the Tower, shall be responsible for repair and maintenance of the Tower necessary to assure its physical and structural integrity; provided, however, that Tenant shall be responsible for sharing in the costs of maintenance of the Tower and fencing. Landlord shall be responsible for any damage to Tenant's property caused solely by Landlord in the course of fulfilling its repair and maintenance obligations to the extent not covered by insurance.

(e) Tenant, by its authorized representatives, shall have access to the Premises, twenty-four (24) hours a day, seven (7) days a week. For purposes of this section, authorized representative means an employee of Tenant, whose name and title has been provided in writing by Tenant to Landlord, together with a current picture identification of the employee. Tenant's authorized representatives may only access the Premises after providing advance notice to Landlord by notifying the on-duty commanding officer at the Livonia Police main desk of the identity of the authorized representative(s) who will be entering the Premises together with a

description of the vehicle(s) which will be used and the approximate time the authorized representative(s) will be on the Premises.

6. Taxes and Assessments. Tenant shall be solely responsible for, and shall promptly pay all personal property taxes levied and assessed against it or its personal property. Tenant shall also be solely responsible for all real estate, special assessments or similar taxes (if any) relating to the Premises.

7. Insurance and Indemnification by Tenant. Tenant shall maintain throughout the term of this Lease, insurance with coverage and liability limits as described in Exhibit "E," with each policy to be endorsed to include Landlord as an additional insured, entitled to at least thirty (30) days prior written notice of any cancellation or material change in the insurance. Tenant shall furnish to Landlord certificates of insurance, confirming the coverage and endorsement required throughout the term of this Lease.

(a) Tenant may rely on insurance coverage to satisfy its obligation to repair or correct damages from its installations or operations under Section 5(c), provided the insurer has acknowledged in writing the existence of coverage in a sufficient amount, the damage or interference is not disrupting or interrupting the communications systems of Landlord or other Tower users and the parties have agreed to a deadline for completion of the required repairs or corrective action that is consistent with the nature and extent of the damages and required corrective action.

(b) Tenant agrees to indemnify, defend and hold Landlord harmless from any claims for damages, injury or loss to property or persons, including costs

and reasonable attorney fees incurred by Landlord, arising from or in connection with Tenant's installations and/or operations on the Site.

8. Interference. The parties recognize the potential for broadcast and electronic interference inherent in multiple use of the Tower and the need to cooperate with each other and other Tower users in preventing the occurrence of interference and promptly eliminating it if it occurs. Consistent with this recognition and objective, the parties agree as follows:

(a) Tenant shall obtain an intermod study at its own expense and shall furnish same to Landlord for Landlord's approval prior to commencement of this Lease.

(b) Landlord agrees that the definitions of and procedures to prevent or eliminate interference contained in this Lease shall be uniform for all users of the Tower and will be included in all other leases or license agreements which Landlord may subsequently enter into with other tenants or licensees.

(c) As used in this Lease, "interference" shall mean a material impairment of the quality of sound, picture or data signals on a broadcasting activity or electronic equipment use as compared with that which would be obtained if no other broadcaster were using or had equipment on the Tower different than what existed on the date of this Lease. To the extent applicable, the existence of interference and procedures for preventing or eliminating it shall be according to rules and regulations of the FCC and the recommended practice of the Electronics Industries Association (EIA).

(d) Tenant acknowledges that its knowledge, experience and resources on the subject of interference and the recommended practices of EIA and the rules and regulations of the FCC are superior to Landlord's. Tenant agrees that at all times it will conduct its operations in full compliance with the practices of EIA and rules and regulations of the FCC, and that upon written request by Landlord regarding any particular operation or activity, will provide written documentation confirming the required compliance.

(e) Tenant acknowledges that in addition to Landlord, the Tower may be used by one or more of Tenant's competitors, and agrees that it will not knowingly or intentionally install its equipment or conduct its operations on the Premises in a manner which will prevent, obstruct or interfere with its competitor realizing the same level of broadcasting quality that Tenant desires and expects to obtain under this Lease.

(f) In order to prevent the occurrence of interference and allow the parties to promptly identify possible sources of interference if it occurs, each party shall provide the other with written notice of the day, time and nature of all equipment placed, or work performed, on the tower as part of installations, repairs, maintenance, movement or replacement, with technical specifications for all new equipment. Except for emergencies or situations which require more immediate activity, the written notice shall be provided at least seven (7) days before the activity, in which case, the actual date and time of the activity shall be confirmed by a second notice.

(g) The parties agree to promptly notify the other of any interference experienced with their respective broadcasting activities believed to be attributable to others, including the date and time it was first experienced and a description of the interference.

(h) Tenant's installations, operations and use on the Premises shall not cause interference with existing or future broadcast activities or electronic equipment of Landlord or other Tower users. Any such interference shall be eliminated by Tenant at its expense in a prompt manner consistent with the nature, extent and effects of the interference. If the interference is disrupting or substantially reducing the continuous nature and required quality of Landlord's public safety communications, Tenant shall immediately suspend its operations upon receiving written notice from Landlord to do so, until the interference has been eliminated or remedied. Upon Tenant's failure to immediately suspend operations, Landlord may take whatever action it deems necessary to eliminate or remedy the interference, with any cost or expense of said action to be paid by Tenant within thirty (30) days of written notice.

(i) Claims by or against the parties and/or other Tower users regarding interference and any disagreements regarding the existence and sources of interference shall be resolved consistent with the following general principles or as may be otherwise agreed by the parties involved in the claim or disagreement.

(1) Time is of the essence.

(2) Interference claimed should be specifically described, and whenever possible, specify the alleged or potential sources and proposed/requested corrective measures.

(3) Parties alleged to be causing interference shall voluntarily implement requested corrections whenever possible, consistent with their analysis of the claim.

(4) Parties causing interference shall be responsible for the cost of correction.

(5) Where requested or suggested corrections are voluntarily implemented and do not correct the interference, the cost of implementation and restoration to the prior condition shall be the responsibility of the party who made the request/suggestion.

(6) Disputes regarding the existence and/or sources of claimed interference shall be resolved, when necessary, by analysis and opinion of an independent expert, selected at random, from names submitted by the parties involved in the dispute or designated by Landlord, with the cost of the independent expert to be paid pro rata by the parties found to be causing the interference.

(7) The determinations and any recommendations for correction of interference by the independent expert shall be binding upon, and immediately implemented by, the responsible parties.

9. Assignments. This Lease and all rights under it may not be assigned by Tenant without Landlord's consent. Tenant shall give Landlord sixty (60) days advance written notice of any proposed assignment. Such an assignment, if approved by Landlord, shall not relieve or release Tenant from its obligations under this Lease unless the assignee has agreed in writing to assume those obligations and Landlord has consented in writing to a release of Tenant. Whether Landlord will consent to a requested assignment and/or release, and any conditions imposed in connection with the consent, shall be in the sole discretion of Landlord.

10. Subletting Prohibited. Tenant shall be prohibited from subletting all or part of the Premises.

11. Termination; Default. This Lease may be terminated prior to its expiration as provided in this section.

(a) If either party is in default or breach of this Lease for more than thirty (30) days after written notice of breach or default from the other party, the rights of the party in breach or default may be terminated by the other party, to be effective sixty (60) days after written notice to terminate is given; provided, however, that the grace period for any monetary default is ten (10) days from receipt of notice. If Landlord terminates this Lease, it shall be entitled to all remedies provided in this Lease and by law, including but not limited to, re-entry, repossession and denial of Tenant's access to the Premises, retention of rent paid in advance and liquidated damages as provided in Section 11(i). Landlord shall not be entitled to distrain Tenant's personal property on the Premises if security for liquidated

damages under Section 11(i) and delinquent financial obligations under Sections 3 and 8, acceptable to Landlord is provided by Tenant. The parties acknowledge that this subparagraph intends to provide sufficient time to obtain alternate licensing or leasing arrangements.

(b) Upon thirty (30) days written notice to Landlord, Tenant may terminate this Lease if and to the extent, through no fault of Tenant, it has lost or been denied any necessary governmental authorization for all or part of its uses of the Premises as contemplated in this Lease and has exhausted all administrative remedies or appeals, documentation of which shall accompany the written notice. Such a termination shall not require Landlord to return any portion of the annual advance rent to the Tenant unless the loss or denial was caused by Landlord's acts or omissions in violation of this Lease.

(c) Tenant may terminate this Lease at any time upon ninety (90) days advance written notice to Landlord provided that any delinquent financial obligations of Tenant under Sections 3 and 8 and liquidated damages under Section 11(i) are paid. If at least one (1) year advance notice is given, liquidated damages shall not be payable.

(d) If Landlord defaults in its obligation to provide access to and use of the Premises by Tenant such that Tenant is unable to use the Premises as provided in this Lease, resulting in Tenant terminating this Lease, Tenant shall have all remedies available under this Lease and applicable law.

(e) Subject to satisfying liquidated damages under Section 11(i) and delinquent financial obligations to Landlord under Sections 3 and 8, upon expiration, termination or cancellation of this Lease, for any reason, Tenant shall remove all its equipment and installations from the Premises within forty-five (45) days. In addition to the required removal, Tenant shall restore the Premises to the condition which existed prior to Tenant's use and occupancy, reasonable wear and tear and intervening circumstances as approved by Landlord, excepted. The required restoration requires Tenant to remove any concrete footings or foundations to a depth of one foot (1') below ground level, but shall not permit Tenant to remove any security fence it may have constructed, if prior to the termination date, Landlord has provided written notice to Tenant to leave the security fence on the Premises, which at that time shall become the property of Landlord.

(f) If the Premises are destroyed or damaged through no fault of Tenant to an extent that materially and adversely will affect Tenant's use of the Premises for more than thirty (30) days, Tenant may terminate this Lease on thirty (30) days written notice to Landlord, unless the destruction or damage is repaired and the material and adverse affects are eliminated within the thirty (30) days. Tenant's option under this Section is conditioned on promptly pursuing individually and/or by cooperating with Landlord to secure the required repairs.

(g) If the Tower is damaged or destroyed through no fault of Landlord, it may elect to repair, rebuild or restore the Tower to the same condition which

existed immediately prior to the damage or destruction or to terminate this Lease by written notice to Tenant, given within fifteen (15) days of the damage or destruction. If Landlord terminates the Lease, Tenant shall be entitled to a refund of rent for each full month from the date of termination to the next anniversary date, with the monthly refund amount being equal to 1/12 of the last annual rental payment. If Landlord elects to repair, rebuild or restore the Tower, the Lease has not been terminated as provided in Section 11(f) and the damage or destruction has deprived Tenant of its full use and enjoyment of the premises, Tenant shall be entitled to fifty percent (50%) rent abatement by credit against its next annual rental payment, from the date of damage or destruction to the date repairs or restoration are completed, with the amount of rent abatement to be based on the number of days without use, using the last annual rental payment as a basis.

(h) If the portion of the Site occupied by all or part of the Premises is taken by eminent domain or condemned by any public authority, this lease shall terminate, with Landlord entitled to the amount of any condemnation award.

(i) Upon a termination by Landlord under Section 11(a) or Tenant under Section 11(c) on less than one (1) year advance written notice, at any time except during the last year of the initial and any renewal term, in addition to any annual advance rent which has been paid to Landlord, Tenant shall also be liable for and pay liquidated damages in the amount of one-third

(1/3) of the last annual rental payment, in satisfaction of any then remaining term of this Lease, this provision being in recognition of the long range nature of this Lease, the Landlord's annual budget process and to limit and define liability in advance of any such termination.

(j) If Tenant's estate created by this Lease is taken by execution or other legal process, is assigned for the benefit of creditors or, if a petition in bankruptcy or for appointment of receiver concerning Tenant is filed and pending without dismissal for more than sixty (60) days or upon a bankruptcy adjudication of or appointment of receiver for Tenant, this Lease may be terminated at the option of Landlord.

12. Quiet Enjoyment; Cooperation; Estoppel Letters.

(a) Landlord covenants and agrees that upon payment of the rental and observance and performance of all covenants, terms and conditions by Tenant under this Lease, Tenant shall peaceably and quietly hold and enjoy the Premises, rights and privileges granted hereunder for the term hereby demised without hindrance or interference by Landlord.

(b) Landlord agrees, provided there is no expense to, or changes required by, Landlord to reasonably cooperate with Tenant in any efforts by Tenant to secure or renew any governmental permits, that are not issued or required by Landlord, necessary to use the Premises as contemplated in this Lease, and to join in any applications or other documents reasonably requested by Tenant.

(c) Landlord and Tenant agree to furnish to each other upon request, letters confirming whether this Lease is in full force and effect free of known defaults and such other matters concerning the status of this Lease which may be reasonably requested.

13. Underwriter Requirements. Tenant hereby agrees to observe all reasonable regulations and requirements of underwriters concerning the use and condition of the Premises tending to reduce fire hazards and insurance rates and further agrees not to permit nor allow any rubbish, waste materials or products to accumulate on the Premises.

14. Construction. This Lease shall be construed in accordance with the laws of the State of Michigan. In the event that any provisions hereof shall be legally unenforceable as determined by final order of a court of competent jurisdiction or the FCC, the remaining provision shall nevertheless be carried into effect. The parties agree that time is of the essence of this Lease.

15. Paragraph Headings; Entire Agreement; Oral Modifications. The section or paragraph headings contained herein are for convenience only and shall not be deemed a part of this Lease. This Lease, which includes the attached Exhibits, contains the entire understanding between the parties with reference to the matters contained herein, there being no terms, conditions, warranties, or representations other than those contained herein, and no amendment hereto shall be valid unless made in writing and signed by both of the parties hereto.

16. Successors and Interests. Subject to the provisions regarding assignment, this Lease shall be binding upon, and inure to the benefit of, the successors-in-interest and permitted assigns of the parties hereto.

17. Landlord's Representations. Landlord covenants and represents, as of the date of this Lease, to Tenant as follows:

(a) Landlord is in possession and control of the Site, good and marketable legal title to which is presently held by the City of Livonia and that there are no easements, covenants, restrictions, judgments or other exceptions which might impair Landlord's ability to lease the Premises to Tenant.

(b) Subject to subsection (a), Landlord has full authority to execute, deliver and perform this Lease, which benefits and serves a legitimate public purpose by generating revenues.

(c) There is no litigation or other proceeding pending or threatened affecting title to or permitted uses of the site and Premises.

(d) Landlord will provide written notice to Tenant upon discovering or receiving notice of any fact or claim related to the title, authority or proceedings described in subsections (a) through (c).

18. Tenant's Agreements. Tenant acknowledges and agrees:

(a) That at all times it will conduct its operations on the Premises in a lawful manner, in compliance with all standards, rules and regulations of the FCC and any other governmental agency with authority over Tenant's use and business on the Premises, including Landlord's ordinances, and that Tenant will not store any property or material outside its equipment enclosure except as disclosed on Exhibit "C."

(b) That it has inspected the Premises and Tower and accepts the existing conditions as satisfactory for installation of Tenant's equipment as

disclosed on Exhibit "C," in accordance with all required governmental permits, licenses or approvals.

(c) That it will obtain and thereafter diligently maintain all permits, licenses or other governmental approvals required for its use and operations on the premises throughout the initial and extension terms of this Lease.

19. Notices. All notices, requests or other writings provided for under this Lease must be in writing and shall be deemed validly given on the date of personal delivery or of mailing if sent by certified mail, return receipt requested, addressed as follows (or any other address that the party to be notified may have designated to the sender by like notice):

TENANT: AT&T Wireless PCS, Inc.
26877 Northwestern Highway, Suite 350
Southfield, Michigan 48034

-and-

LANDLORD: City of Livonia
33000 Civic Center Drive
Livonia, MI 48154
Attn: Michael T. Slater, Director of Finance

20. Broker's Commissions. The parties represent that neither of them has used real estate brokers in connection with this Lease.

21. Environmental Matters.

(a) Definition. For purposes of this Lease, "Hazardous Material" includes any hazardous, toxic or dangerous waste, substance or material as defined in the Comprehensive Environmental Response, Compensation, and Liability Act, or any other existing federal or state statute, relating to, or imposing

liability or standards of conduct concerning any hazardous, toxic or dangerous waste, substance or material.

(b) No Hazardous Material. Neither Landlord nor, to the best knowledge of Landlord, any other person has ever caused or permitted any hazardous material to be placed, held, located, dumped, stored or disposed of on or under the Site or any part thereof.

(c) Tenant's Indemnity. Tenant indemnifies and agrees to hold Landlord harmless from all losses, liabilities, damages, injuries, costs, expenses, and claims of every kind that are paid, incurred or suffered by or asserted against Landlord for, with respect to, or as a direct or indirect result of, the presence on or under, or the escape, seepage, leakage, spillage, discharge, emission, discharging or release from the Premises and Site into or upon any land, the atmosphere, or any watercourse, body of water or wetland, of any hazardous material, caused by or under the control of Tenant.

(d) Landlord's Indemnity. Landlord indemnifies and agrees to hold Tenant harmless from all losses, liabilities, damages, injuries, costs, expenses and claims of every kind that are paid, incurred or suffered by or asserted against Tenant for, with respect to, or as a direct or indirect result of, the presence on or under, or the escape, seepage, leakage, spillage, discharge, emission, discharging or release from the Premises and Site into or upon any land, the atmosphere, or any watercourse, body of water or wetland, of any hazardous material, that is caused by or under the control of Landlord, the existence or potential source of which was not disclosed.

(e) Survival. The provisions of this section shall survive the termination of this Lease.

22. Remedies Not Exclusive. It is agreed that the rights, remedies and benefits provided by this Lease shall be cumulative, and shall not be exclusive of any other of said rights, remedies and benefits, or of any other rights, remedies and benefits allowed by law.

23. Waiver. One or more waivers of any covenant or condition by Landlord shall not be construed as a waiver of a further breach of the same covenant or condition.

24. Counterparts. This Lease may be executed in several counterparts, each of which shall be an original and all of which shall constitute but one and the same instrument.

Date: _____

LANDLORD

WITNESSES:

CITY OF LIVONIA, a Municipal Corporation and Body Politic

_____

By: _____
Jack E. Kirksey, Mayor

And

_____

By: _____
Joan McCotter, City Clerk

LANDLORD'S ADDRESS:

City of Livonia
33000 Civic Center Drive
Livonia, MI 48154

Date: _____

WITNESSES:

_____

_____

TENANT

AT&T Wireless PCS, Inc.
a Delaware Corporation

By: _____

Its: _____

By: _____

Its: _____

TENANT'S ADDRESS:

AT&T Wireless PCS, Inc.
26877 Northwestern Highway, Suite 350
Southfield, Michigan 48034

POLICE DEPARTMENT PROPERTY

That part of the N.W. 1/4 of Section 22, T. 1S., R. 9E., described as beginning South 1°25' West, 795.23 feet and South 88°35'30" East, 108 feet from N.W. corner Section 22: thence South 1°25' West, 1,019.14 feet; thence South 88°32'30" East, 600 feet; thence North 1°25' East, 1,019.14 feet; thence South 88°32'30" East, 600 feet to the point of beginning.

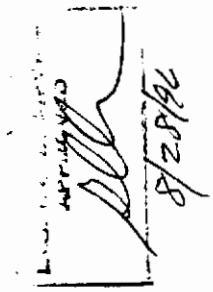

EXHIBIT A

EXHIBIT B

LEGAL DESCRIPTION

COMMENCING AT THE N.W. CORNER, SECTION 22, T1S, R9E, CITY OF LIVONIA, WAYNE COUNTY, STATE OF MICHIGAN; THENCE S 01°58'55" E 1749.74 FEET ALONG THE WEST LINE OF SAID SECTION AND CENTERLINE OF FARMINGTON ROAD; THENCE N 42°33'05" E 635.96 FEET FOR A PLACE OF BEGINNING; THENCE CONTINUING N 42°33'05" E 65.00 FEET; THENCE S 46°47'00" E 40.00 FEET; THENCE S 42°33'05" W 65.00 FEET; THENCE N 46°47'00" W 40.00 FEET TO THE PLACE OF BEGINNING. BEING A PART OF THE N.W. 1/4 OF SAID SECTION 22 AND CONTAINING 0.06 ACRES OF LAND, MORE OR LESS. INCLUDING RIGHTS OF INGRESS AND EGRESS AND PUBLIC UTILITIES OVER EXISTING ROADWAYS, PARKING AREAS, AND DRIVES.

NEXTEL DESCRIPTION

N 42°23'37" W 83°22'18"	LATITUDE OF CENTER OF TOWER

2/22/01

EXHIBIT D
SCHEDULE OF RENTS

PERIOD					ANNUAL RENT
INITIAL TERM					
October 1,	1996	TO	September 30,	1997	$24,000
October 1,	1997	TO	September 30,	1998	24,960
October 1,	1998	TO	September 30,	1999	25,958
October 1,	1999	TO	September 30,	2000	26,997
October 1,	2000	TO	September 30,	2001	28,077
1ST FIVE YEAR EXTENSION					
October 1,	2001	TO	September 30,	2002	29,200
October 1,	2002	TO	September 30,	2003	30,368
October 1,	2003	TO	September 30,	2004	31,582
October 1,	2004	TO	September 30,	2005	32,846
October 1,	2005	TO	September 30,	2006	34,159
2ND FIVE YEAR EXTENSION					
October 1,	2006	TO	September 30,	2007	35,526
October 1,	2007	TO	September 30,	2008	36,947
October 1,	2008	TO	September 30,	2009	38,425
October 1,	2009	TO	September 30,	2010	39,962
October 1,	2010	TO	September 30,	2011	41,560
3RD FIVE YEAR EXTENSION					
October 1,	2011	TO	September 30,	2012	43,223
October 1,	2012	TO	September 30,	2013	44,952
October 1,	2013	TO	September 30,	2014	46,750
October 1,	2014	TO	September 30,	2015	48,620
October 1,	2015	TO	September 30,	2016	50,564
		GRAND TOTAL			$714,674

EXHIBIT E

AT&T Wireless PCS, Inc. will provide a Certificate of Insurance with the following requirements before any work begins on the site and will give thirty (30) days written notice to the below named certificate holder for any change to the policy to occur.

1) General Liability

A.	General liability coverage (including bodily injury and property damage coverage)	Combined single limit of $1,000,000 per occurrence
B.	Automobile liability coverage	$1,000,000
C.	Workers Compensation and Employers Liability	$1,000,000

2) Additionally Insured

The City of Livonia will be named as additionally insured.

3) Certificate Holder

City of Livonia
33000 Civic Center Drive
Livonia, MI 48154
Attn: Department of Law

mv/21:tower

OFFICE OF THE MAYOR

JACK E. KIRKSEY
MAYOR

33000 CIVIC CENTER DRIVE
LIVONIA, MICHIGAN 48154-3097
(313) 421-2000
FAX: 421-4870

96 SEP 23 PM 3:21

September 24, 1996

Honorable Members of the City Council
City of Livonia

RE: Proposed lease space on the City's communications tower located at the Police Department by AT&T Wireless, PCS, Inc.

Dear Council Members:

The City of Livonia has been approached by Lorraine Buerger and Anthony Amine of AT&T Wireless PCS, Inc. to lease space on the City's communications tower located at the Police Department. AT&T has agreed to an annual rental of twenty-four thousand dollars ($24,000.00), with a 4% increase for each subsequent year.

The administration has conducted a survey of surrounding communities and has determined that the proposed rental rate is a fair market price and that none of the surrounding communities has a higher rate. Therefore, it is my recommendation that the Council accepts the lease agreement with AT&T Wireless PCS, Inc., on behalf of the City of Livonia.

Sincerely,

Jack E. Kirksey

Jack E. Kirksey, Mayor
CITY OF LIVONIA

JEK:g
cc: City Clerk
City Attorney
Finance Dir.

Recycled Paper

On a motion by Taylor, seconded by Feenstra, and unanimously adopted, it was:

#860-96 RESOLVED, that the Council does hereby amend the Orders of the Day by removing Item 28 from the agenda and placing same on the September 30, 1996 Regular Meeting, removing Item 29 from the agenda and placing same on the September 16, 1996 Study Meeting, adding Item 16f (to schedule a public hearing date), and adding two (2) new items to the end of the agenda, which shall be considered as Item 32 and Item 33.

SEP 11 1996

On a motion by Feenstra, seconded by Brosnan, and unanimously adopted, it was:

CELLULAR TOWERS
Proposed lease agreement bet. the City of Livonia and AT&T Wireless PCS, Inc. for use of a portion of the radio tower located at the Police Station.
(Refer to Law)

#890-96 RESOLVED, that having considered the report and recommendation of the Legislative Committee, dated September 10, 1996, submitted pursuant to Council Resolution 831-96, and the report and recommendation of the Department of Law, dated August 8, 1996, approved by the Finance Director and approved for submission by the Mayor, to which is attached a proposed lease agreement between the City of Livonia and AT&T Wireless PCS, Inc. for use of a portion of the radio tower located at the Police Station, the Council does hereby refer this matter to the Department of Law for further negotiations with AT&T Wireless PCS, Inc. regarding the term of the proposed lease.

SEP 11 1996

33 X2 - a wb

LEGISLATIVE COMMITTEE

TUESDAY, SEPTEMBER 10, 1996

A Legislative Committee meeting was held on Tuesday, September 10, 1996, in the Second Floor Council Chambers of the Livonia City Hall, 33000 Civic Center Drive, Livonia, MI 48154-3097.

Committee Members Present:	Fernon P. Feenstra, Chairman Maureen Miller Brosnan Michael P. McGee
Committee Members Absent:	None.
City Officials and Others Present:	Mayor Jack Kirksey Council President Laura Councilmember Taylor Councilmember Vandersloot City Attorney Kavanagh Joseph Garcia, Karoub Associates Ralph Williams Paul Pierson

The meeting convened at 6:30 P.M.

5. CR-540-96 - Proposed amendment to Section 18.42 of the Zoning Ordinance to regulate the installation of cellular/communication towers and antennas. Referred for report and recommendation.

The Committee recommends:

- Adopt resolution to send the proposed ordinance amendment to the Livonia Planning Commission for public hearing.

This item to be placed as an **X-Item on the Regular Meeting Agenda of September 10, 1996.**

6. CR-831-96 - RESOLVED, that having considered the report and recommendation of the Department of Law, dated August 8, 1996, approved by the Finance Director and approved for submission by the Mayor, to which is attached a proposed lease agreement between the City of Livonia and AT&T Wireless PCS, Inc. for a period of five years with three successive five-year renewal periods for use of a portion of the radio tower located at the Police Station and the installation of an equipment shelter at the site at an annual rent of $24,000.00 to be paid to the City (which amount shall be increased by 4% per year), the Council does hereby refer the subject of the financial aspects associated with the lease of space on the City's communication tower to the Legislative Committee for its report and recommendation.

The Committee recommends:

- Adopt resolution which authorizes the Law Department to begin negotiations.

This item to be placed as an **X-Item on the Regular Meeting Agenda of September 10, 1996.**

The meeting adjourned at 7:55 P.M.

On a motion by Feenstra, seconded by Brosnan, and unanimously

adopted, it was:

CELLULAR TOWERS
Proposed lease agreement bet. the City and AT&T Wireless PCS, Inc. for use of a portion of the radio tower located at the Police Station and the installation of an equipment shelter at the site. (Refer to Communications Tower Comm.)

#830-96 RESOLVED, that having considered the report and recommendation of the Department of Law, dated August 8, 1996, approved by the Finance Director and approved for submission by the Mayor, to which is attached a proposed lease agreement between the City of Livonia and AT&T Wireless PCS, Inc. for a period of five years with three successive five-year renewal periods for use of a portion of the radio tower located at the Police Station and the installation of an equipment shelter at the site at an annual rent of $24,000.00 to be paid to the City (which amount shall be increased by 4% per year), the Council does hereby refer this subject to the Communications Tower Committee for its report and recommendation.

AUG 26 1996

John Rathbone, AT&T, 26957 Northwestern Hwy, Ste. 305, Southfield, MI answered questions regarding the aforementioned item.

On a motion by Feenstra, seconded by Duggan, it was:

RESOLVED, that having considered the report and recommendation of the Department of Law, dated August 8, 1996, approved by the Finance Director and approved for submission by the Mayor, to which is attached a proposed lease agreement between the City of Livonia and AT&T Wireless PCS, Inc. for a period of five years with three successive five-year renewal periods for use of a portion of the radio tower located at the Police Station and the installation of an equipment shelter at the site at an annual rent of $24,000.00 to be paid to the City (which amount shall be increased by 4% per year), the Council does hereby refer the subject matter of lease of space on the City's communications tower to the Committee of the Whole for its report and recommendation.

Feenstra and Duggan withdrew their motions on the foregoing resolution.

On a motion by Feenstra, seconded by Duggan, and unanimously

adopted, it was:

CELLULAR TWOERS
Proposed lease agreement bet. the City and AT&T Wireless PCS, Inc. for use of a portion of the radio tower located at the Police Station and the installation of an equipment shelter at the site.
(Refer to Legislative Comm.)

#831-96 RESOLVED, that having considered the report and recommendation of the Department of Law, dated August 8, 1996, approved by the Finance Director and approved for submission by the Mayor, to which is attached a proposed lease agreement between the City of Livonia and AT&T Wireless PCS, Inc. for a period of five years with three successive five-year renewal periods for use of a portion of the radio tower located at the Police Station and the installation of an equipment shelter at the site at an annual rent of $24,000.00 to be paid to the City (which amount shall be increased by 4% per year), the Council does hereby refer the subject of the financial aspects associated with the lease of space on the City's communication tower to the Legislative Committee for its report and recommendation.

AUG 26 1996

DEPARTMENT OF FINANCE

Michael T. Slater
DIRECTOR OF FINANCE

James P. Andres
CHIEF ACCOUNTANT

RECEIVED
OFFICE OF THE CITY
96 AUG 26 PM

Jack E. Kirksey
MAYOR

96 AUG 26 PM 3:55

33000 CIVIC CENTER DRIVE
LIVONIA, MICHIGAN 48154-3097
421-2000
FAX: 421-1807

NEW DATA ATTACHED

This item has been scheduled as follows:

Study Meeting _____

Regular Meeting 9/9/96

Other _____

Copies to _____

August 22, 1996

Honorable Members of the City Council
City of Livonia, Michigan

Re: Proposed Tower Lease with AT&T

Dear Council Members:

At the Study Meeting on August 19, 1996, City Council requested additional information regarding tower lease rates paid in other communities. I have attached a survey of tower lease rates that was performed in April, 1996.

Very truly yours,

Michael T. Slater

Michael T. Slater
Director of Finance

Approved for Submission

Jack E. Kirksey

Jack E. Kirksey, Mayor

MTS:ml
Attachment

pc: City Clerk, City Attorney, Director of Planning

EXHIBIT A

SCHEDULE OF TOWER RENTAL INCOME
CITY OF LIVONIA AND SURROUNDING AREA
As of April 2, 1996

Lessor/Lessee	Tower Built by Lessee	Terms of Lease
Botsford Park w/ Ameritech	Yes	$600/mo with 5 year renewals as: $700/mo $800/mo $900/mo $1000/mo Plus: Storage Shed for City
Whispering Willows/ Fox Creek w/ Nextel	Yes	$833/mo increased by 4% per year. 25% of colease revenue to City - the tower would belong to Nextel, but will revert to City upon written request. Some improvements will be provided such as cart paths and eventual paving of same.
Schoolcraft College w/Ameritech	Yes	$10,000/yr with 5 five-year renewals. At the end of the lease the tower reverts to the college.
Stevenson High School w/ Ameritech	Yes	$600/mo - Plus: Press Box for athletic field.
Plymouth/Canton w/ Ameritech	Yes	$600/ mo - Removed tower from original site and moved it to new location. Revamped Plymoth-Canton radio equipment.
Farmington Hills w/ Detroit Cellular	No	$21,500 plus 2% per year annually in advance with 5% late charge after two weeks.
Sterling Heights w/ Ameritech	Yes	$1,333/mo plus 5% per year, Plus: tower to revert to City at end of lease (2021), various construction, improvements and equipment including a new 911 system

EXHIBIT A

SCHEDULE OF TOWER RENTAL INCOME
CITY OF LIVONIA AND SURROUNDING AREA
As of April 2, 1996

Lessor/Lessee	Tower Built by Lessee	Terms of Lease
Dearborn w/Cellular One	Yes	Rent will commence in approx. 5 years, Plus: Storage shelters were constructed. They are doing some research based on lease of commercial sites for towers and equipment, and have determined that rent is approx. $900/mo for the tower space and $900/mo for the space required on the ground for transmitters/receivers.
Auburn Hills w/Ameritech and Cellular One	Yes	Rent is currently $25,000/ yr, with 5% increase and 20 year renewable lease. Ameritech and Cellular One each pay 50%. The tower does not belong to the City, but will revert to them in 20 years.
Royal Oak w/ Cellular One Turned down by Council	Yes	$22,000 up front, $600/mo plus improvements.
Southfield		
3 w/Ameritech	Yes	
1 w/Cellular One	Yes	Received $50,000 initally, plus annual rental of approx. $7,500 each.
Mt. Clemens w/ Nextel	Yes	Receive $500/mo - not sure of length of lease. Tower belongs to Nextel.
Westland w/Nextel	Yes	Receive $700/mo plus 4% per year with four renewals.

EXHIBIT A

SCHEDULE OF TOWER RENTAL INCOME
CITY OF LIVONIA AND SURROUNDING AREA
As of April 2, 1996

Lessor/Lessee	Tower Built by Lessee	Terms of Lease
Novi w/Powerphone (Proposed)	Yes	Would receive $1150/mo plus contruct a building and provide equipment to the City. The City would retain the right to lease space, and Powerphone would do maintenance.
Wixom w/Ameritech	Yes	Receive $700/mo , plus mount the City's equipment and build a garage for Public Service.
Oakland County w/AT&T (Proposed)	No	Would Receive $1,200/mo. Oakland County supply space and equipment room. AT&T would provide maintenance and pay utilities.

A:\TOWERLEA.WK1

DEPARTMENT OF LAW

CITY ATTORNEY
Sean P. Kavanagh

CHIEF ASSISTANT CITY ATTORNEY
Cathryn K. White

ASSISTANT CITY ATTORNEY
Michael E. Fisher

ASSISTANT CITY ATTORNEY
Barbara J. Scherr

RECEIVED OFFICE OF THE CITY CLERK 96 AUG 12 PM 4:57

33000 CIVIC CENTER DRIVE
LIVONIA, MICHIGAN 48154-3097
(313) 421-2000, ext. 226-227
FAX: 421-4870

This item has been scheduled as follows:

Jack E. Kirksey
MAYOR

Study Meeting 8/19/96

Regular Meeting

Other

Copies to

August 8, 1996

TO: HONORABLE MEMBERS OF THE CITY COUNCIL

FROM: DEPARTMENT OF LAW

SUBJECT: Proposed lease of space on the City's communications tower located at the Police Department by AT&T Wireless, PCS, Inc.

Dear Council Members:

[redacted]. AT&T has agreed to an annual rental of twenty-four thousand dollars ($24,000.00), with a 4% increase for each subsequent year. The initial lease term is for five (5) years, with three (3) additional five (5) year renewal options. AT&T has also agreed to undertake an intermod study beforehand to insure that its operations will cause no interference to activities or equipment of the City or other Tower users. AT&T has requested to also be allowed to construct a 20' x 10' equipment shelter near the base of the tower, which is acceptable to the Police Department. If AT&T subsequently decides to terminate the lease without giving at least one (1) year advance notice (except during the last year of the initial or any renewal term), it will be liable for payment of liquidated damages of 1/3 of the annual rental payment in addition to the annual rent for that year. AT&T has also agreed to share in the maintenance costs of the tower.

Based on these understandings, this office has prepared a proposed lease agreement which has been approved by AT&T, the Finance Director and the Police Department. The proposed agreement is submitted hereto for your consideration. [redacted]

RESOLVED, that having considered the report and recommendation of the Department of Law, dated August 8, 1996, approved by the Finance

Director, and approved for submission by the Mayor, to which is attached a proposed lease agreement between the City of Livonia and AT&T Wireless PCS, Inc. for a period of five years with three successive five-year renewal periods for use of a portion of the radio tower located at the police station and the installation of an equipment shelter at the site at an annual rent of $24,000.00 to be paid to the City (which amount shall be increased by 4% per year), the Council does hereby authorize the Mayor and City Clerk, for and on behalf of the City of Livonia, to execute the attached agreement in the manner and form herein submitted, as well as to do all other things necessary or incidental to the full performance of this resolution.

APPROVED FOR SUBMISSION:

Jack E. Kirksey, Mayor

Very truly yours,

Sean P. Kavanagh, City Attorney

APPROVED:

Michael T. Slater, Finance Director

Cathryn K. White
Chief Assistant City Attorney

CKW:mv

Enclosure

cc: Mayor, Clerk, Council, Police
Finance, Engineering, Planning
Director of Public Works

21:\letters\at&t-ltr

LEASE AGREEMENT

This Lease Agreement, commences _____, between the CITY OF LIVONIA, a municipal corporation ("Landlord"), whose address is 33000 Civic Center Drive, Livonia, Michigan 48154, and AT&T Wireless PCS, Inc., a Delaware Corporation ("Tenant"), whose address is 26877 Northwestern Highway, Suite 350, Southfield, Michigan 48034.

RECITALS:

Landlord has legal title to real property (the "Site") located at the common address of 15050 Farmington Road, City of Livonia, Wayne County, State of Michigan, and a communications tower structure on that property (the "Tower"), portions of which Tenant wishes to lease from Landlord, for telecommunication purposes, which includes the transmission and reception of radio communication signals. The legal description of the site is shown on Exhibit "A." The portion of the Site and Tower which Landlord has agreed to lease to Tenant for the stated purposes is described on Exhibit "B," and is referred to in this lease as the "Premises."

NOW THEREFORE, for and in consideration of value received and the mutual promises contained in this Lease, Landlord and Tenant agree as follows:

1. Use of Leased Premises. This Lease of the Premises described in Exhibit "B" by Landlord to Tenant grants to Tenant, subject to restrictions or limitations contained in this Lease:

(a) The right to use vertical space on the Tower for the installation, maintenance and operation of up to nine (9) antennae, plus provisions for Omni whips mounted at a base height of 100 feet (plus or minus 15 feet)on

the Tower, with the top of the antennae to be no higher than 115 feet on the Tower, together with necessary transmission cables or lines no greater than two (2) inches in diameter. Detailed plans and specifications conforming to this provision are attached as Exhibit "C" and are hereby approved and accepted by Landlord. All antennae, cables or lines and related equipment installed on the Premises in accordance with this Lease are and shall remain Tenant's personal property.

(b) The right to construct or install, secure and use an equipment enclosure on the ground of the Premises provided it is not permanently attached to the land, the size and location being set forth in Exhibit "C."

(c) Access, utility and transmission line easements necessary for Tenant to use, enjoy and maintain its installations on the Premises.

(d) The right to install and maintain cables and transmission lines between the equipment enclosure and its installations on the Tower subject to Landlord's right to designate the route to be utilized, which shall be consistent with the accepted engineering practice, the Landlord's existing installations and primary purpose for which the Tower was constructed.

(e) The rights and access granted to Tenant are non-exclusive, Landlord hereby reserving the right to enter in and upon the Premises as provided in this Lease.

2. Term of Lease.

(a) The initial term of this Lease shall be five (5) years from commencement.

(b) Provided Tenant is not in default, the term of this Lease shall be automatically extended for up to three (3) additional and separate five (5) year terms unless Tenant gives Landlord written notice of intention to terminate at least six (6) months prior to the end of each current term.

(c) Landlord or Tenant may terminate this Lease by written notice at least six (6) months prior to the end of any five (5) year extension.

3. Rent and Lease Payments.

(a) The annual rental for the first year shall be Twenty-four Thousand Dollars ($24,000.00), with the annual rental for each subsequent year of the initial and extension terms to be increased by four percent (4%), as set forth on Exhibit "D."

(b) Annual rental payments shall be paid by Tenant to Landlord in advance on or before the commencement date of this Lease and each anniversary date thereafter at Landlord's address designated in this Lease or to such other person or location as Landlord designates in writing at least thirty (30) days prior to a rental payment due date.

(c) A payment of rent or other financial obligations of Tenant to Landlord more than five (5) days after it is due, shall be considered a default and include an administrative late charge equal to five percent (5%) of the required payment.

4. Utilities. Tenant shall be responsible for securing installation of separate lines and meters, and for all charges, fees and expenses for utility services for the leased Premises.

5. Installation, Alterations, Repairs and Maintenance.

(a) The equipment which Landlord has approved for placement or installation on the Premises by Tenant is described on Exhibit "C." In the ordinary course of business, Tenant may replace used, broken or obsolete equipment, without Landlord's consent, with equipment that has similar physical dimensions, characteristics and impact as the existing equipment. Tenant shall not install equipment in a manner which may adversely affect the physical and structural integrity and capacity of the Tower as designed, or that causes damage to Landlord's or other Tower users' property.

(b) Except for replacement in the ordinary course of business, Tenant shall not make any other alterations or improvements to the Premises without Landlord's prior written consent. Improvements added without the required consent shall become Landlord's property. Landlord shall not be required to consider any request by Tenant under this section unless it is accompanied by detailed plans and specifications, which, if approved, will serve as an amendment of Exhibit "C."

(c) Tenant's installation and operation of materials, equipment and fixtures shall be done in a neat, workmanlike manner, consistent with good engineering practices and without damage to the Site, Tower or property and operations of Landlord and other Site or Tower users. Subject to Section 7, Tenant shall promptly repair or correct any damages caused by its installations and operations.

(d) Subject to Section 11(g), Landlord, as the owner of the Tower, shall be responsible for repair and maintenance of the Tower necessary to assure its physical and structural integrity; provided, however, that Tenant shall be responsible for sharing in the costs of maintenance of the Tower and fencing. Landlord shall be responsible for any damage to Tenant's property caused solely by Landlord in the course of fulfilling its repair and maintenance obligations to the extent not covered by insurance.

(e) Tenant, by its authorized representatives, shall have access to the Premises, twenty-four (24) hours a day, seven (7) days a week. For purposes of this section, authorized representative means an employee of Tenant, whose name and title has been provided in writing by Tenant to Landlord, together with a current picture identification of the employee. Tenant's authorized representatives may only access the Premises after providing advance notice to Landlord by notifying the on-duty commanding officer at the Livonia Police main desk of the identity of the authorized representative(s) who will be entering the Premises together with a description of the vehicle(s) which will be used and the approximate time the authorized representative(s) will be on the Premises.

6. Taxes and Assessments. Tenant shall be solely responsible for, and shall promptly pay all personal property taxes levied and assessed against it or its personal property. Tenant shall also be solely responsible for all real estate, special assessments or similar taxes (if any) relating to the Premises.

7. Insurance and Indemnification by Tenant. Tenant shall maintain throughout the term of this Lease, insurance with coverage and liability limits as described in Exhibit "E," with each policy to be endorsed to include Landlord as an additional insured, entitled to at least thirty (30) days prior written notice of any cancellation or material change in the insurance. Tenant shall furnish to Landlord certificates of insurance, confirming the coverage and endorsement required throughout the term of this Lease.

(a) Tenant may rely on insurance coverage to satisfy its obligation to repair or correct damages from its installations or operations under Section 5(c), provided the insurer has acknowledged in writing the existence of coverage in a sufficient amount, the damage or interference is not disrupting or interrupting the communications systems of Landlord or other Tower users and the parties have agreed to a deadline for completion of the required repairs or corrective action that is consistent with the nature and extent of the damages and required corrective action.

(b) Tenant agrees to indemnify, defend and hold Landlord harmless from any claims for damages, injury or loss to property or persons, including costs and reasonable attorney fees incurred by Landlord, arising from or in connection with Tenant's installations and/or operations on the Site.

8. Interference. The parties recognize the potential for broadcast and electronic interference inherent in multiple use of the Tower and the need to cooperate with each other and other Tower users in preventing the occurrence of interference and

promptly eliminating it if it occurs. Consistent with this recognition and objective, the parties agree as follows:

(a) Tenant shall obtain an intermod study at its own expense and shall furnish same to Landlord for Landlord's approval prior to commencement of this Lease.

(b) Landlord agrees that the definitions of and procedures to prevent or eliminate interference contained in this Lease shall be uniform for all users of the Tower and will be included in all other leases or license agreements which Landlord may subsequently enter into with other tenants or licensees.

(c) As used in this Lease, "interference" shall mean a material impairment of the quality of sound, picture or data signals on a broadcasting activity or electronic equipment use as compared with that which would be obtained if no other broadcaster were using or had equipment on the Tower different than what existed on the date of this Lease. To the extent applicable, the existence of interference and procedures for preventing or eliminating it shall be according to rules and regulations of the FCC and the recommended practice of the Electronics Industries Association (EIA).

(d) Tenant acknowledges that its knowledge, experience and resources on the subject of interference and the recommended practices of EIA and the rules and regulations of the FCC are superior to Landlord's. Tenant agrees that at all times it will conduct its operations in full compliance with the practices of EIA and rules and regulations of the FCC, and that upon

written request by Landlord regarding any particular operation or activity, will provide written documentation confirming the required compliance.

(e) Tenant acknowledges that in addition to Landlord, the Tower may be used by one or more of Tenant's competitors, and agrees that it will not knowingly or intentionally install its equipment or conduct its operations on the Premises in a manner which will prevent, obstruct or interfere with its competitor realizing the same level of broadcasting quality that Tenant desires and expects to obtain under this Lease.

(f) In order to prevent the occurrence of interference and allow the parties to promptly identify possible sources of interference if it occurs, each party shall provide the other with written notice of the day, time and nature of all equipment placed, or work performed, on the tower as part of installations, repairs, maintenance, movement or replacement, with technical specifications for all new equipment. Except for emergencies or situations which require more immediate activity, the written notice shall be provided at least seven (7) days before the activity, in which case, the actual date and time of the activity shall be confirmed by a second notice.

(g) The parties agree to promptly notify the other of any interference experienced with their respective broadcasting activities believed to be attributable to others, including the date and time it was first experienced and a description of the interference.

(h) Tenant's installations, operations and use on the Premises shall not cause interference with existing or future broadcast activities or electronic

equipment of Landlord or other Tower users. Any such interference shall be eliminated by Tenant at its expense in a prompt manner consistent with the nature, extent and effects of the interference. If the interference is disrupting or substantially reducing the continuous nature and required quality of Landlord's public safety communications, Tenant shall immediately suspend its operations upon receiving written notice from Landlord to do so, until the interference has been eliminated or remedied. Upon Tenant's failure to immediately suspend operations, Landlord may take whatever action it deems necessary to eliminate or remedy the interference, with any cost or expense of said action to be paid by Tenant within thirty (30) days of written notice.

(i) Claims by or against the parties and/or other Tower users regarding interference and any disagreements regarding the existence and sources of interference shall be resolved consistent with the following general principles or as may be otherwise agreed by the parties involved in the claim or disagreement.

(1) Time is of the essence.

(2) Interference claimed should be specifically described, and whenever possible, specify the alleged or potential sources and proposed/requested corrective measures.

(3) Parties alleged to be causing interference shall voluntarily implement requested corrections whenever possible, consistent with their analysis of the claim.

(4) Parties causing interference shall be responsible for the cost of correction.

(5) Where requested or suggested corrections are voluntarily implemented and do not correct the interference, the cost of implementation and restoration to the prior condition shall be the responsibility of the party who made the request/suggestion.

(6) Disputes regarding the existence and/or sources of claimed interference shall be resolved, when necessary, by analysis and opinion of an independent expert, selected at random, from names submitted by the parties involved in the dispute or designated by Landlord, with the cost of the independent expert to be paid pro rata by the parties found to be causing the interference.

(7) The determinations and any recommendations for correction of interference by the independent expert shall be binding upon, and immediately implemented by, the responsible parties.

9. Assignments. This Lease and all rights under it may not be assigned by Tenant without Landlord's consent. Tenant shall give Landlord sixty (60) days advance written notice of any proposed assignment. Such an assignment, if approved by Landlord, shall not relieve or release Tenant from its obligations under this Lease unless the assignee has agreed in writing to assume those obligations and Landlord has consented in writing to a release of Tenant. Whether Landlord will consent to a requested assignment and/or release, and any conditions imposed in connection with the consent, shall be in the sole discretion of Landlord.

10. Subletting Prohibited. Tenant shall be prohibited from subletting all or part of the Premises.

11. Termination; Default. This Lease may be terminated prior to its expiration as provided in this section.

(a) If either party is in default or breach of this Lease for more than thirty (30) days after written notice of breach or default from the other party, the rights of the party in breach or default may be terminated by the other party, to be effective sixty (60) days after written notice to terminate is given; provided, however, that the grace period for any monetary default is ten (10) days from receipt of notice. If Landlord terminates this Lease, it shall be entitled to all remedies provided in this Lease and by law, including but not limited to, re-entry, repossession and denial of Tenant's access to the Premises, retention of rent paid in advance and liquidated damages as provided in Section 11(i). Landlord shall not be entitled to distrain Tenant's personal property on the Premises if security for liquidated damages under Section 11(i) and delinquent financial obligations under Sections 3 and 8, acceptable to Landlord is provided by Tenant. The parties acknowledge that this subparagraph intends to provide sufficient time to obtain alternate licensing or leasing arrangements.

(b) Upon thirty (30) days written notice to Landlord, Tenant may terminate this Lease if and to the extent, through no fault of Tenant, it has lost or been denied any necessary governmental authorization for all or part of its uses of the Premises as contemplated in this Lease and has exhausted all

administrative remedies or appeals, documentation of which shall accompany the written notice. Such a termination shall not require Landlord to return any portion of the annual advance rent to the Tenant unless the loss or denial was caused by Landlord's acts or omissions in violation of this Lease.

(c) Tenant may terminate this Lease at any time upon ninety (90) days advance written notice to Landlord provided that any delinquent financial obligations of Tenant under Sections 3 and 8 and liquidated damages under Section 11(i) are paid. If at least one (1) year advance notice is given, liquidated damages shall not be payable.

(d) If Landlord defaults in its obligation to provide access to and use of the Premises by Tenant such that Tenant is unable to use the Premises as provided in this Lease, resulting in Tenant terminating this Lease, Tenant shall have all remedies available under this Lease and applicable law.

(e) Subject to satisfying liquidated damages under Section 11(i) and delinquent financial obligations to Landlord under Sections 3 and 8, upon expiration, termination or cancellation of this Lease, for any reason, Tenant shall remove all its equipment and installations from the Premises within forty-five (45) days. In addition to the required removal, Tenant shall restore the Premises to the condition which existed prior to Tenant's use and occupancy, reasonable wear and tear and intervening circumstances as approved by Landlord, excepted. The required restoration requires Tenant to remove any concrete footings or foundations to a depth of one foot (1')

below ground level, but shall not permit Tenant to remove any security fence it may have constructed, if prior to the termination date, Landlord has provided written notice to Tenant to leave the security fence on the Premises, which at that time shall become the property of Landlord.

(f) If the Premises are destroyed or damaged through no fault of Tenant to an extent that materially and adversely will affect Tenant's use of the Premises for more than thirty (30) days, Tenant may terminate this Lease on thirty (30) days written notice to Landlord, unless the destruction or damage is repaired and the material and adverse affects are eliminated within the thirty (30) days. Tenant's option under this Section is conditioned on promptly pursuing individually and/or by cooperating with Landlord to secure the required repairs.

(g) If the Tower is damaged or destroyed through no fault of Landlord, it may elect to repair, rebuild or restore the Tower to the same condition which existed immediately prior to the damage or destruction or to terminate this Lease by written notice to Tenant, given within fifteen (15) days of the damage or destruction. If Landlord terminates the Lease, Tenant shall be entitled to a refund of rent for each full month from the date of termination to the next anniversary date, with the monthly refund amount being equal to 1/12 of the last annual rental payment. If Landlord elects to repair, rebuild or restore the Tower, the Lease has not been terminated as provided in Section 11(f) and the damage or destruction has deprived Tenant of its full use and enjoyment of the premises, Tenant shall be

entitled to fifty percent (50%) rent abatement by credit against its next annual rental payment, from the date of damage or destruction to the date repairs or restoration are completed, with the amount of rent abatement to be based on the number of days without use, using the last annual rental payment as a basis.

(h) If the portion of the Site occupied by all or part of the Premises is taken by eminent domain or condemned by any public authority, this lease shall terminate, with Landlord entitled to the amount of any condemnation award.

(i) Upon a termination by Landlord under Section 11(a) or Tenant under Section 11(c) on less than one (1) year advance written notice, at any time except during the last year of the initial and any renewal term, in addition to any annual advance rent which has been paid to Landlord, Tenant shall also be liable for and pay liquidated damages in the amount of one-third (1/3) of the last annual rental payment, in satisfaction of any then remaining term of this Lease, this provision being in recognition of the long range nature of this Lease, the Landlord's annual budget process and to limit and define liability in advance of any such termination.

(j) If Tenant's estate created by this Lease is taken by execution or other legal process, is assigned for the benefit of creditors or, if a petition in bankruptcy or for appointment of receiver concerning Tenant is filed and pending without dismissal for more than sixty (60) days or upon a

bankruptcy adjudication of or appointment of receiver for Tenant, this Lease may be terminated at the option of Landlord.

12. Quiet Enjoyment; Cooperation; Estoppel Letters.

(a) Landlord covenants and agrees that upon payment of the rental and observance and performance of all covenants, terms and conditions by Tenant under this Lease, Tenant shall peaceably and quietly hold and enjoy the Premises, rights and privileges granted hereunder for the term hereby demised without hindrance or interference by Landlord.

(b) Landlord agrees, provided there is no expense to, or changes required by, Landlord to reasonably cooperate with Tenant in any efforts by Tenant to secure or renew any governmental permits, that are not issued or required by Landlord, necessary to use the Premises as contemplated in this Lease, and to join in any applications or other documents reasonably requested by Tenant.

(c) Landlord and Tenant agree to furnish to each other upon request, letters confirming whether this Lease is in full force and effect free of known defaults and such other matters concerning the status of this Lease which may be reasonably requested.

13. Underwriter Requirements. Tenant hereby agrees to observe all reasonable regulations and requirements of underwriters concerning the use and condition of the Premises tending to reduce fire hazards and insurance rates and further agrees not to permit nor allow any rubbish, waste materials or products to accumulate on the Premises.

14. Construction. This Lease shall be construed in accordance with the laws of the State of Michigan. In the event that any provisions hereof shall be legally unenforceable as determined by final order of a court of competent jurisdiction or the FCC, the remaining provision shall nevertheless be carried into effect. The parties agree that time is of the essence of this Lease.

15. Paragraph Headings; Entire Agreement; Oral Modifications. The section or paragraph headings contained herein are for convenience only and shall not be deemed a part of this Lease. This Lease, which includes the attached Exhibits, contains the entire understanding between the parties with reference to the matters contained herein, there being no terms, conditions, warranties, or representations other than those contained herein, and no amendment hereto shall be valid unless made in writing and signed by both of the parties hereto.

16. Successors and Interests. Subject to the provisions regarding assignment, this Lease shall be binding upon, and inure to the benefit of, the successors-in-interest and permitted assigns of the parties hereto.

17. Landlord's Representations. Landlord covenants and represents, as of the date of this Lease, to Tenant as follows:

(a) Landlord is in possession and control of the Site, good and marketable legal title to which is presently held by the City of Livonia and that there are no easements, covenants, restrictions, judgments or other exceptions which might impair Landlord's ability to lease the Premises to Tenant.

(b) Subject to subsection (a), Landlord has full authority to execute, deliver and perform this Lease, which benefits and serves a legitimate public purpose by generating revenues.

(c) There is no litigation or other proceeding pending or threatened affecting title to or permitted uses of the site and Premises.

(d) Landlord will provide written notice to Tenant upon discovering or receiving notice of any fact or claim related to the title, authority or proceedings described in subsections (a) through (c).

18. Tenant's Agreements. Tenant acknowledges and agrees:

(a) That at all times it will conduct its operations on the Premises in a lawful manner, in compliance with all standards, rules and regulations of the FCC and any other governmental agency with authority over Tenant's use and business on the Premises, including Landlord's ordinances, and that Tenant will not store any property or material outside its equipment enclosure except as disclosed on Exhibit "C."

(b) That it has inspected the Premises and Tower and accepts the existing conditions as satisfactory for installation of Tenant's equipment as disclosed on Exhibit "C," in accordance with all required governmental permits, licenses or approvals.

(c) That it will obtain and thereafter diligently maintain all permits, licenses or other governmental approvals required for its use and operations on the premises throughout the initial and extension terms of this Lease.

19. Notices. All notices, requests or other writings provided for under this Lease must be in writing and shall be deemed validly given on the date of personal delivery or of mailing if sent by certified mail, return receipt requested, addressed as follows (or any other address that the party to be notified may have designated to the sender by like notice):

TENANT: AT&T Wireless PCS, Inc.
26877 Northwestern Highway, Suite 350
Southfield, Michigan 48034

-and-

LANDLORD: City of Livonia
33000 Civic Center Drive
Livonia, MI 48154
Attn: Michael T. Slater, Director of Finance

20. Broker's Commissions. The parties represent that neither of them has used real estate brokers in connection with this Lease.

21. Environmental Matters.

(a) Definition. For purposes of this Lease, "Hazardous Material" includes any hazardous, toxic or dangerous waste, substance or material as defined in the Comprehensive Environmental Response, Compensation, and Liability Act, or any other existing federal or state statute, relating to, or imposing liability or standards of conduct concerning any hazardous, toxic or dangerous waste, substance or material.

(b) No Hazardous Material. Neither Landlord nor, to the best knowledge of Landlord, any other person has ever caused or permitted any hazardous

material to be placed, held, located, dumped, stored or disposed of on or under the Site or any part thereof.

(c) Tenant's Indemnity. Tenant indemnifies and agrees to hold Landlord harmless from all losses, liabilities, damages, injuries, costs, expenses, and claims of every kind that are paid, incurred or suffered by or asserted against Landlord for, with respect to, or as a direct or indirect result of, the presence on or under, or the escape, seepage, leakage, spillage, discharge, emission, discharging or release from the Premises and Site into or upon any land, the atmosphere, or any watercourse, body of water or wetland, of any hazardous material, caused by or under the control of Tenant.

(d) Landlord's Indemnity. Landlord indemnifies and agrees to hold Tenant harmless from all losses, liabilities, damages, injuries, costs, expenses and claims of every kind that are paid, incurred or suffered by or asserted against Tenant for, with respect to, or as a direct or indirect result of, the presence on or under, or the escape, seepage, leakage, spillage, discharge, emission, discharging or release from the Premises and Site into or upon any land, the atmosphere, or any watercourse, body of water or wetland, of any hazardous material, that is caused by or under the control of Landlord, the existence or potential source of which was not disclosed on Exhibit "I."

(e) Survival. The provisions of this section shall survive the termination of this Lease.

22. Remedies Not Exclusive. It is agreed that the rights, remedies and benefits provided by this Lease shall be cumulative, and shall not be exclusive of any other of said rights, remedies and benefits, or of any other rights, remedies and benefits allowed by law.

23. Waiver. One or more waivers of any covenant or condition by Landlord shall not be construed as a waiver of a further breach of the same covenant or condition.

24. Counterparts. This Lease may be executed in several counterparts, each of which shall be an original and all of which shall constitute but one and the same instrument.

Date: _____

LANDLORD

WITNESSES:

CITY OF LIVONIA, a Municipal Corporation and Body Politic

_____

By: _____
Jack E. Kirksey, Mayor

And

_____

By: _____
Joan McCotter, City Clerk

LANDLORD'S ADDRESS:

City of Livonia
33000 Civic Center Drive
Livonia, MI 48154

Date: _____

TENANT

WITNESSES:

AT&T Wireless PCS, Inc.
a Delaware Corporation

_____

By: _____

Its: _____

_____

By: _____

Its: _____

TENANT'S ADDRESS:

AT&T Wireless PCS, Inc.
26877 Northwestern Highway, Suite 350
Southfield, Michigan 48034

SITE # 3109

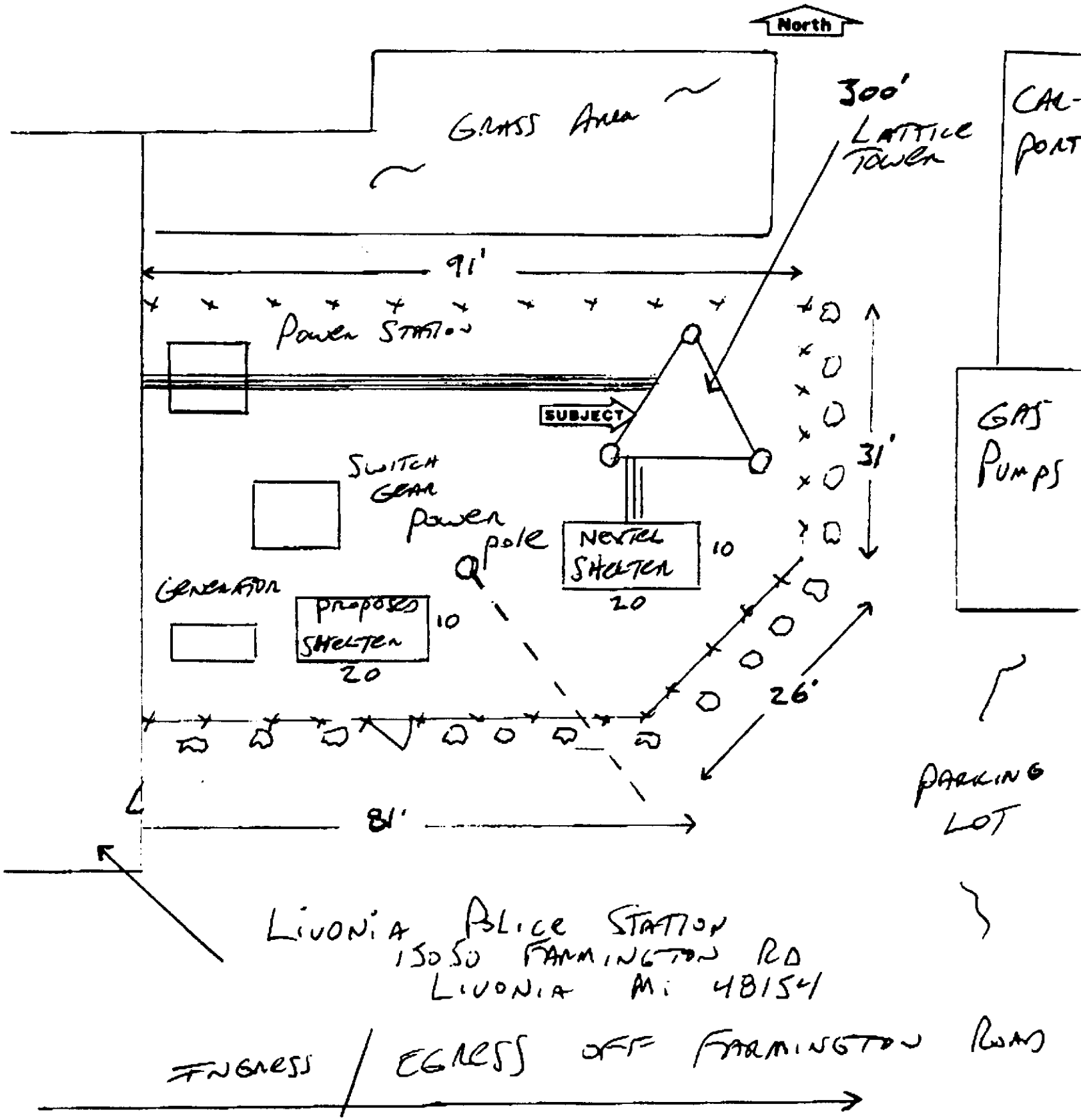

EXHIBIT C

EXHIBIT D
SCHEDULE OF RENTS

PERIOD					ANNUAL RENT
INITIAL TERM					
October 1,	1996	TO	September 30,	1997	$24,000
October 1,	1997	TO	September 30,	1998	24,960
October 1,	1998	TO	September 30,	1999	25,958
October 1,	1999	TO	September 30,	2000	26,997
October 1,	2000	TO	September 30,	2001	28,077
1ST FIVE YEAR EXTENSION					
October 1,	2001	TO	September 30,	2002	29,200
October 1,	2002	TO	September 30,	2003	30,368
October 1,	2003	TO	September 30,	2004	31,582
October 1,	2004	TO	September 30,	2005	32,846
October 1,	2005	TO	September 30,	2006	34,159
2ND FIVE YEAR EXTENSION					
October 1,	2006	TO	September 30,	2007	35,526
October 1,	2007	TO	September 30,	2008	36,947
October 1,	2008	TO	September 30,	2009	38,425
October 1,	2009	TO	September 30,	2010	39,962
October 1,	2010	TO	September 30,	2011	41,560
3RD FIVE YEAR EXTENSION					
October 1,	2011	TO	September 30,	2012	43,223
October 1,	2012	TO	September 30,	2013	44,952
October 1,	2013	TO	September 30,	2014	46,750
October 1,	2014	TO	September 30,	2015	48,620
October 1,	2015	TO	September 30,	2016	50,564
GRAND TOTAL					$714,674

EXHIBIT E

AT&T Wireless PCS, Inc. will provide a Certificate of Insurance with the following requirements before any work begins on the site and will give thirty (30) days written notice to the below named certificate holder for any change to the policy to occur.

1) General Liability

A.	General liability coverage (including bodily injury and property damage coverage)	Combined single limit of $1,000,000 per occurrence
B.	Automobile liability coverage	$1,000,000
C.	Workers Compensation and Employers Liability	$1,000,000

2) Additionally Insured

The City of Livonia will be named as additionally insured.

3) Certificate Holder

City of Livonia
33000 Civic Center Drive
Livonia, MI 48154
Attn: Department of Law

mv/21:tower

From The Desk Of . . .

BONNIE JOHNSON
Council Office

Council:

Just a short note to let you know that a Jennifer Jones of Communications Alert, also known as Vertical Real Estate, located in Ft. Wayne, Indiana, called to inquire about their company attaching onto the communications tower located at Police Headquarters. I have referred her to the Mayor's Office. For your records her telephone no. is (800) 869-3777.

8/26/96

OFFICE OF THE COUNCIL

33000 CIVIC CENTER DRIVE
LIVONIA, MICHIGAN 48154-3097

58-A.9

Ed Bacon
FMHC Corporation
26011 Evergreen
Suite 320
Southfield, MI 48076

20

25

51-6-9

Ed Bacon no longer represents AT&T. All contacts should be made thru John Dalk's office.
(313) 961-2550
Only Public Hearing only.
10-6-97 [illegible]

LETTER TO THE LIVONIA CITY COUNCIL

7.

Council Office
October 19, 2021

MEETING DATE	PREPARED BY
November 8, 2021	Sara Kasprowicz, Council Office Manager

AGENDA ITEM

Senior Citizens and Families Committee Meeting of October 11, 2021
Subject matter of noise waiver requests and acceptable decibel levels at events. (CR 262-21)

BACKGROUND

CR 262-21 RESOLVED, that upon the motion by Councilmember Laura Toy, seconded by Councilmember Brandon McCullough, at the Regular Meeting held August 23, 2021, the Council does hereby refer the subject matter of noise waiver requests and acceptable decibel levels at events.

RECOMMENDATION

To report out the discussion regarding the subject matter of noise waiver requests and acceptable decibel levels at events.

FISCAL CONSIDERATION

N/A

ATTACHMENTS

1. LTC: SCF101121
2. R082321 Subject matter of acceptable decibel levels to CofW CR 262-21

APPROVED BY

SENIOR CITIZENS AND FAMILIES COMMITTEE MEETING

MONDAY, OCTOBER 11, 2021

A Committee meeting was held on Monday, October 11, 2021, in the City Hall Council Chambers on the 2nd floor.

Committee Members Present:	Councilmember Rob Gjonaj-Donovic, Chairman Councilmember Laura M. Toy, Member
Committee Members Absent:	Councilmember Cathy K. White, Vice Chair
City Officials and Others Present:	Councilmember Kathleen E. McIntyre, President Paul Bernier, City Attorney Jerome Hanna, Director of Inspection
Additional Attendees:	See list of attendees attached.

The meeting convened at 7:00 p.m.

1. CR 262-21 Subject matter of noise waiver requests and acceptable decibel levels at events.

Discussion was led by Council Chair Rob Donovic, regarding noise at outdoor events and its impact on the peace of nearby homes and their respective residents, while also encouraging community activities and neighborly fun.

An exchange of ideas took place on the following items:

- Enforcement can take place at the time of the incident, rather than the following day when Code Enforcement Officers are on duty and the event has concluded.
- What the acceptable or legal decimal levels are for outdoor events and during what time.

The Law Department explained that enforcement must be objective and not arbitrary.

The Inspection Department explained that Code Enforcement Officers work during certain hours and days, consistent with normal business hours. Decimal levels are measured at the property line of the individual receiving the noise. The standard is not the problem, it's the enforcement.

It was noted that Council has the authority to place certain conditions on the Petitioner to implement noise plans before authorizing waivers. There are several changes that need to be done to some ordinances since the adoption of the Livonia Vison 21 ordinance, which the Law and Inspection departments are already reviewing.

The noise plan should be shown to Council prior to the granting of such noise waiver requests. Petitioners should know that the end time granted by Council's noise waiver means the noise stops at that time, not 10 minutes after, for example.

Residents attending the meeting made the following suggestions:

- Posting signage nearby to give residents adequate notice of the event and noise and establish a clear understanding of the decimal ceiling
- A Sound Engineer being onsite during the events to control the noise

The Law Department is looking into what other communities do and how they handle such requests and situations.

The Committee recommends:

A resolution to refer the noise ordinance to the Law Department for potential updates.

The Law Department will look into what other communities do and how they handle such requests and situations.

Note: This item will remain in Committee for future updates

This item is to be placed on the **Regular Meeting Agenda of November 8, 2021**

The meeting was adjourned at 8:05 p.m.

Respectfully submitted,

Rob Donovic

cc: City Clerk, City Attorney

PLEASE SIGN IN

MEETING: SENIOR CITIZENS AND FAMILIES COMMITTEE MEETING

DATE: MONDAY, OCTOBER 11, 2021

TIME: 7:00 PM

NAME	DEPARTMENT OR ADDRESS
Cathy Condon	[redacted]
Paul Condon	
Scott Morgan	
Steven Johnson	
Marci Qiu	
Haytham Fakhouri	
Steve George	

LETTER TO THE LIVONIA CITY COUNCIL

1.

Council Office
August 30, 2021

MEETING DATE	PREPARED BY
October 11, 2021	Sara Kasprowicz, Council Office Manager,

AGENDA ITEM

Subject matter of noise waiver requests and acceptable decibel levels at events. (CR 262-21)

BACKGROUND

#262-21 RESOLVED, that upon the motion by Councilmember Laura Toy, seconded by Councilmember Brandon McCullough, at the Regular Meeting held August 23, 2021, the Council does hereby refer the subject matter of noise waiver req.uests and acceptable decibel levels at events.

RECOMMENDATION

To discuss the subject matter of noise waiver requests and acceptable decibel levels at events.

FISCAL CONSIDERATION

N/A

ATTACHMENTS

1. R082321 Subject matter of acceptable decibel levels to CofW CR 262-21

APPROVED BY

On a motion by Toy, supported by McCullough, and unanimously adopted, it was:

> **#262-21** RESOLVED, that upon the motion by Councilmember Laura Toy, seconded by Councilmember Brandon McCullough, at the Regular Meeting held August 23, 2021, the Council does hereby refer the subject matter of noise waiver requests and acceptable decibel levels at events to the Senior Citizens and Families Committee for its report and recommendation.

REQUEST FROM COUNCIL MEMBER (Regular Meeting of August 23, 2021)

Motion by:	**Toy**
Seconded by:	**McCullough**
ROLL CALL:	
Ayes:	**Toy, Bahr, White, McCullough, Donovic, Jolly, McIntyre**
Nays:	**None**
Absent:	**None**

CITY OF LIVONIA – CITY COUNCIL
MINUTES OF STUDY MEETING HELD OCTOBER 18, 2021

Meeting was called to order in the Auditorium of City Hall, 33000 Civic Center Drive, at 8:35 p.m. by President Kathleen McIntyre. Present: Jim Jolly, Laura Toy, Scott Bahr, Cathy White, Brandon McCullough, Rob Donovic, and President Kathleen McIntyre. Absent: None.

1. REQUEST TO PURCHASE CITY-OWNED PROPERTY: Zak Alzught, re: offer to purchase City-owned property at 29660 Gaylord Court.

Zak Alzught, 29656 Schoolcraft Road, presented this request to Council. He stated several months back he was driving through the neighborhood when they were doing working on Schoolcraft Road, you're all familiar with them having construction going on there. So I got lost in the back there, on Gaylord Court, there's actually a nice little cul-de-sac there. And as I drove through there turning back around and coming back out I realized that that actually butts up against the property where we live currently at 29656 Schoolcraft. My father owns the property, we've been there for several years now, we're very happy in Livonia. And it came to mind that I should look into who owns the property and as luck has it, it's the City of Livonia. So it's a little bit more involved than going through the owner obviously and requesting to purchase the property and here we are today. I understand now that this is a process that comes to a resolution where it will be voted on, it comes to the public, etc. All I have to offer at this point is my willingness to bow out should anybody object to it but I believe there are a few things that the City could appreciate and sort of as a benefit to the City. In some respect it is, obviously the property is as per two letters that I submitted to the City initially to purchase the property and then it came to mind that I could potentially even exchange property that my father owns there that abuts the property. Any amalgamation of that property and any breakup of that property and lay out of the property we would be willing to exchange for the property on Gaylord Court, if that makes sense, that might be way out of line. But in terms of the City, obviously the City would have less upkeep and property responsibility there. It is potentially a neighborhood improvement, it's a nice little neighborhood. I think a nice house after we build would be an improvement there. Obviously a resident retention, I don't want to move to Canton or Plymouth or anywhere else for that matter. We do like it in Livonia and finally, of course, is the property tax revenue. So, in consideration of these things I hope that the City will give this some thought. If there's any questions, please feel free to ask.

Vice President Bahr thanked Alzught for being at the meeting tonight. He stated it wasn't 100% clear to me, so it's your intent when you talk about possibly exchanging the property, your intent would be to move off of your current home and you want to build a new home at this property and Alzught replied we would retain the house on Schoolcraft though as well. Bahr said what I guess I'm ultimately getting at is you want to purchase this property in order to build a new

home there, right, and Alzught replied yes. Bahr stated I don't think I have any further questions; I think his request is reasonable and good for you for a creative mind on a walk or a drive in the neighborhood. I've seen this property before and I'm actually a little bit surprised, maybe somebody has asked in the past about this, but I think what's appropriate and this is what's been recommended to us and I think it makes sense, is to refer this to the Administration, Parks & Recreation probably specifically, to just get their opinion on what to do with this. I think your request is totally valid, I just want to look at what the Administration's view would be for that property before we make any big decisions. So I would offer that resolution, to send it to the Administration for recommendation.

Councilmember Donovic stated I think it makes sense, without knowing what the City intended to do with the property, I don't know if anybody is familiar because I Googled it and looked it up and it's just a vacant lot, if I was correct, so I don't understand what the City would necessarily do with this. So I think we have an awesome opportunity to build a new home and keep some Livonia residents while we're doing it. I do have a question and I might not even get an answer, but who determines the asking price, I don't know if that's a question maybe for Mr. Taormina through the Chair.

Attorney Bernier stated you couldn't just directly tell it to this gentleman, if it went up for sale this gentleman may not get the property and it may be somebody else that you may not want to get that property and I should add that I believe it's park land, too.

Donovic said I have one more question, what was there before, was there a home there or has it always been vacant?

Bernier replied we looked at it because I believe I talked to the gentleman, there's several of us from the Law Department that did, and we told him the process to come through. When that was developed, that was like a fill-in subdivision and those lots were never intended, I think it was left intentionally vacant so that there would be open space.

Taormina stated I think the proper course, first step would be to refer to the Parks Commission, I believe that was suggested although you had said refer it to the Administration, but the Parks Commission. Normally this would go before the Planning Commission for the disposition of any City-owned property, however, because this is Public Land, it should first go to Parks and then I guess the question to Council would then be, depending on the recommendation from the Parks Commission, if it would go directly to the Planning Commission to hold a public hearing or would it first come back to the Council before you made that decision, so it depends on what happens at the Parks Commission.

Bahr stated he would modify his resolution to refer to the Parks & Rec Commission.

Councilmember Jolly said I don't want to go in an opposite direction necessarily here but the fact that this is zoned Park Land currently, I think my voting for this would be very unlikely. I think the residents, although it's open space right now, the residents who purchased their houses understand that it was park land and probably relied upon that. As a City we also have a situation with there are certain grants out there that determine funding for our Parks system. Because of things we've done with our park land in the past, we are below where we used to be in terms of acreage with our park lands, and further selling off Park Land would continue to go in the negative direction as opposed to coming back in the positive direction. So I just want to be very clear to you and let you know that I probably would not be in support of it and I think it's probably a bad policy to sell park land when it's been understood by other residents to be park land.

Councilmember McCullough asked the Petitioner if he had reached out to any of the neighbors on Gaylord Court and Alzught replied I have not, I've been a little hesitant about doing that.

McCullough then said I, too, share exactly what my colleague Mr. Jolly is bringing up is with it being park land and you have a cul-de-sac there, I don't think I would be in support of changing this either. I value the opportunity that you bring and I think it's a great idea, but I'll tell you what if I was one of the homeowners on that cul-de-sac, I think I would enjoy the public land and that might have been a stipulation, but I don't think I'd be in favor as well, sorry.

Councilmember Toy asked Taormina on a site when it's City-owned like this, before it goes to Parks & Rec, do we require a sign up there that it – or after it goes to Parks & Rec, you know what I'm saying, to say that it might be for sale or it might be up for whatever so that residents know that? I don't think we do, do we?

Taormina replied no, I don't believe a sign is required to be posted until such time that there would be a change of zoning or a lot split under certain conditions. I do know, however, that if the end result is to put the property out for bid, that surrounding property owners are notified, any abutting property owner is given the opportunity to consider bidding on the property.

Attorney Bernier stated Mark is completely right, it's the property owners that are touching it. But this is an interesting one because it would also require, if it goes up for sale, it will require a rezoning. So, it's a complicated transaction and I'm pretty sure because I went down there and looked at it myself, I'm pretty sure that you would probably get a protest petition and the two houses that are next door would be enough to probably do it, it's a complicated one. And I think when we talked, we didn't hold out a great deal of hope, we explained the process but didn't hold out, it's not our vote clearly, the Law Department, but we didn't hold out a great deal of hope that this might happen. Because the conversations we had is that the Parks Department, like Mr. Jolly said, the Parks

& Rec Commission doesn't really want to give up land.

Toy then stated so that brings up the point, it begs the point, if it's City property then if indeed it was identified as being sellable or whatever, would this gentleman as well as anybody that touches it then have the first right of – I know at one point when we looked at some property, it was because we were adjacent to it, we had the first right or honors or whatever. It's fuzzy, but you know what I mean, I'm trying to remember it. Is that true still?

Taormina replied it would be a bidding process. It is a very unique circumstance, the bidding process, regarding the sale of City-owned land.

Councilmember Donovic I didn't know this was park land. Looking at it from an aerial perspective it looks like a cul-de-sac and I just assumed that either at one point there were homes there or the homes had never been built. I did not know it as park land, so contingent upon what the Parks Commission would say, I'm not inclined to support selling park land off with the exception if the Parks Commission says it's not a utilized park and they're okay with that, they're the experts in Parks and Recreation, but I imagine through some of the comments made tonight, I would imagine that the residents that move in next door to that park, assumed it would stay a park and it's City-owned but I don't have a lot of intimate knowledge about those lots right there, again, I just assumed it was just lots that were never finished or built when the cul-de-sac was there, but I'd be interested to see what the Parks Commission says on this particular parcel.

Alzught replied I'd be interested to see that as well. I would also be interested in seeing whether the residents that do touch as Mr. Bernier mentioned, whether they would object to it and obviously like I said at the beginning if there is an objection I would withdraw that. And I do understand the argument for retaining park land, that is clearly a good thing. Thank you all.

Vice President Bahr stated I do want to send this to Parks & Rec like I said just to get their formal recommendation on it but just to your last comment about I don't know the neighbors would say, just having spent more than a decade on the Planning Commission and City Council, I have yet, this is a true statement, I have yet to see a development of any kind that the neighbors like, so I'm just telling you what's coming from that standpoint. But I would be interested to hear and my resolution would still stand, to get the formal feedback from them.

DIRECTION: REFER TO PARKS & REC COMMISSION

LETTER TO THE LIVONIA CITY COUNCIL

9.

Council Office
October 19, 2021

MEETING DATE	PREPARED BY
October 18, 2021.	Sara Kasprowicz, Council Office Manager

AGENDA ITEM

REQUEST TO PURCHASE CITY-OWNED PROPERTY: Zak Alzught, re: offer to purchase City-owned property at 29660 Gaylord Court.

BACKGROUND

Request from Zak Alzught to purchase property at 29660 Gaylord Court or exchange a portion of his property at 29656 Schoolcraft Road.

RECOMMENDATION

Referral to Parks and Recreation for report and recommendation.

FISCAL CONSIDERATION

ATTACHMENTS

1. Letter 2 to City of Livonia, Sept 2021
2. S101821 Req to purch vacant land

APPROVED BY

Zak & Helen Alzught
29656 Schoolcraft Rd.
Livonia, MI 48150
(734) 624-5054
Zak.alzught@yahoo.com

Livonia City Council
33000 Civic Center Dr.
Livonia, MI 48154

Dear Mayor & City Council of Livonia,

This letter is a follow-up to my letter to City Council submitted 9/27/2021. My family is interested in city owned property located at 29660 Gaylord Ct., Parcel # 092040206000. I requested that Livonia City Council determines if that property can be sold and bid on per city guidelines and ordinances. I believe the city may yet prefer another option. Our property, at 29656 Schoolcraft Rd has 180 feet of frontage. It is possible the city, planning commission, or parks and recreation can benefit (now or in the future) from property with direct access to Schoolcraft Rd. With that said, we would be interested in giving up a portion of the property at 29656 Schoolcraft Rd in exchange for the property at 29660 Gaylord Ct. The size and layout of the parcel exchanged can be discussed in further detail. If it benefits the city, we will continue to use and maintain the property the city has acquired in the exchange. Please feel free to reach out to me if any discussion or clarity are warranted.

Sincerely,

Zak Alzught
(734) 624-5054

Kasprowicz, Sara

From: Simmons, Jennifer
Sent: Monday, September 27, 2021 2:18 PM
To: CityCouncil; Taormina, Mark; Hanna, Jerome
Cc: Mayor Staff
Subject: FW: Online Form Submittal: City Council Inquiries
Attachments: Letter to City Council of Livonia Sept 27th, 2021.pdf

Good afternoon,

Please see the attached letter from Mr. Alzught regarding his intentions to purchase land that currently belongs to the City.

Thank you,

Jennifer Simmons
Constituent Relations Specialist
City of Livonia | Mayor's Office
(734) 466-2204
jsimmons@livonia.gov

From: noreply@civicplus.com <noreply@civicplus.com>
Sent: Monday, September 27, 2021 1:54 PM
To: support <support@livonia.gov>
Subject: Online Form Submittal: City Council Inquiries

City Council Inquiries

This form is for any questions, comments, or concerns you may have for the City in regards to city council meetings or other city council inquiries. If you leave contact information, the City will reply within 2 business days. If this is an emergency, please dial 9-1-1.

First Name	Zak
Last Name	Alzught
Email Address	zak.alzught@yahoo.com
Phone Number	7346245054
Topic	Other City Council Inquiry
Date of Issue	9/27/2021
Attachment (Optional)	Letter to City Council of Livonia Sept 27th, 2021.pdf

Comments	Please let me know should a hard copy of this letter be required.

Email not displaying correctly? View it in your browser.

Zak & Helen Alzught
29656 Schoolcraft Rd.
Livonia, MI 48150
(734) 624-5054
Zak.alzught@yahoo.com

Livonia City Council
33000 Civic Center Dr.
Livonia, MI 48154

Dear Mayor & City Council of Livonia,

I'm writing this letter to express interest in purchasing a property I recently learned is owned by the City of Livonia. The property is located at 29660 Gaylord Ct., Parcel # 092040206000. It is presently an empty lot. Our growing family lives at 29656 Schoolcraft Rd, where the two properties are adjoined on their respective back halves. This unique situations would give us and our children an opportunity to live within walking distance of my aging parents. The property is not zoned to build a residence, but should a sale be approved, I will submit formal applications and permits to rezone accordingly. If for whatever reason rezoning the property to build a residence is not possible, please make me aware and I'll respectfully withdraw my request. I also understand it will be my responsibility to have the property appraised and that it will go through a bidding process should city council and the planning commission approve it. I don't believe the city has any plans for this property and hope you consider that approval of this request will produce property tax revenues for generations. I sincerely hope my children can grow up in Livonia and attend Livonia Public Schools while enjoying the pleasant neighborhood (despite the ongoing construction!). I can be reached by email and/or telephone should any clarification or discussion be warranted.

Sincerely,

Zak Alzught
(724) 624-5054

CITY OF LIVONIA – CITY COUNCIL
MINUTES OF STUDY MEETING HELD OCTOBER 18, 2021

Meeting was called to order in the Auditorium of City Hall, 33000 Civic Center Drive, at 8:35 p.m. by President Kathleen McIntyre. Present: Jim Jolly, Laura Toy, Scott Bahr, Cathy White, Brandon McCullough, Rob Donovic, and President Kathleen McIntyre. Absent: None.

7. SITE PLAN PETITION: Planning Commission, re: Petition 2021-08-08-05 submitted by Hellyer Lewis requesting to remodel the exterior of the Citizens Bank at 37307 Six Mile Road, located on the south side of Six Mile Road between Levan and Newburgh Roads in the Northwest ¼ of Section 17.

Mark Taormina, Director of Planning and Economic Development, presented this request to Council. He stated this is an after the fact request involving changes to the Citizens Bank located on Six Mile Road just east of Newburgh Road. This is before you for the simple reason that the building is located within a vicinity controlled zone so any changes, exterior modifications to the building first have to be approved by the Planning Commission and City Council. The work that was done on this building was done without knowledge of the process so the Petitioner is here before you seeking your approval after the fact as I indicated. This is the building, the way it appeared, before the changes were made. And afterwards you can see the color scheme completely changed on the bank. This included squaring off the main central or entrance tower, replacing the brick that was on that with a new material, in this case composite, painting the EIFS green and painting all of the brick on the building white. So, the other piece of New Data that you have before you is actually from the prior owner of this property, which Mr. Frankel, it's a communication. He did retain some type of covenant or restriction regarding the architecture of the building. He has actually indicated that he has approved the elevation on the bottom of this so that would require some changes to the painting scheme on the upper façade of the building. He has not yet approved the tower element the way you see it here. That's something that's ongoing apparently, I'll let Mr. K describe the communication that they've had. But the Planning Commission has approved this, but subject to that maintenance plan that you referenced earlier. What their main concern is now that the brick is painted, how is it going to be maintained and that was the reason for the plan that was presented to you.

Councilmember Jolly stated I live right over there, I see this building quite often, it looks better, it's a big improvement, but I have some concerns not in regard to this particular building but I'm curious how often this happens and at what point the City finds out that unauthorized work has been done. And if and when this happens, and I'm not looking to fine you or anything like that, is there any recourse from the City against those contractors who do work and complete work on projects without going through the appropriate process?

Taormina replied well, this is the recourse at this point, so, it's requiring him to go through the process he would normally have to follow.

Jolly said it's like a day late and a dollar short, though, and honestly, it's probably easier to convince somebody to let you do something after you've already done it and not towards you but in the grand scheme of things, that seems a little backwards. And I think we can kind of understand why, right, because you can't say no when something is already done.

Taormina replied when it comes to the fees, I know Inspection can apply double fees for work that is done without a permit; in this case that would involve modifications to that tower element, the painting of something that typically doesn't require any permit per se but there were no fines or anything with that issue here. I mean the risk that he runs is having to go back and spend another 50 to $75,000.00 to bring it back to its original condition if you decide it's not something that you want to live with.

Jolly said I hope that there's some kind of process within City Hall or with the Inspectors out there in the field to look for sites like this and make sure that the appropriate process has been followed initially so that there aren't issues that are kind of skating under the radar to get away from us. With that being said, in regard to this particular project, if you are waiting for Mr. Frankel to give his approval for this tower element, why are you here before us now? Wouldn't you wait until he approves it so that we can approve it and move on the road here.

Paul Gagel, project manager for Citizens Bank, came to the podium. He stated my work address is 27777 Franklin Road, Southfield, Michigan 48034. What got us here today, a little back story, is we submitted our plans showing the exterior work to the City for review. We received comments back for some interior things and our architect through their due diligence did not catch the ordinance and when we received the comments back there were no specific comments, Mr. Jolly, to just the exterior work, that we had to go through Planning and Zoning, so it was not flagged on either side. So, it was a combined miss between the City and between our architect for that, that's how we got here. And then when we submitted a plan for additional signage for a variance, during that Planning Commission meeting it was identified and discovered that hey, by the way they did exterior work, we issued an interior building permit which we assumed was a building permit for everything, so we just went full blast at it. So, that's how we got to where we're at now. Now, we are actually sitting on a ground lease with Mr. Frankel. We own the building. So, during the course of approvals and things like that for the sign packages as owner of the building, we signed off on the applications or for the applications to get that. During our due diligence of the lease, Mr. Frankel had certain comments about the easements of the property which are up to our curb. But there is one thing in the lease that the elements, the design elements should match the building. But it's my understanding based on previous meetings that that's not an enforceable act or it's not enforceable by our lease is my understanding. So I have been discussing this with Mr. Frankel,

we talked about the color of green, part of your new package should have a couple options of the renderings with the green that we did that was just submitted this morning, we didn't get it in Friday, we got it in first thing this morning. And my conversation with Mr. Frankel on Friday was he likes the green on the lower band but he asked if we could do a rendering, he just threw this at me last week. I didn't get a chance to do any rendering, I'm still working on it with our design team, and that's why I included in the package today, that was submitted today, we have a couple other locations, this has now become our corporate image and we're doing this throughout our entire footprint from here out to the East coast when we renovate a property. So that's why I wanted you folks to have that in your package today to see that we are doing this, we just did it in Royal Oak and we did it in Dearborn Heights.

Jolly said thank you for all of that information, it was very useful. He then offered an approving resolution for the Regular Agenda so you can come back in two weeks and show us the final piece before we actually approve it.

Councilmember Toy thanked Gag for investing in the Livonia community. While you may have missed a few steps here, and that's important as has been pointed out to you, but seriously in this day and age for small businesses, whether it's a bank, or a bakery or a restaurant or whatever, flower shop, too, but in all seriousness there's a lot of challenges out there today, you know, with the Covid, the economy, etc., and small businesses, they used to say are the backbone of our nation, I'm beginning to wonder about that because we need to treat them with the utmost care and the utmost understanding when it comes to things. And you know, again, maybe the Chamber can help out on this by saying if you've got a project you're doing in your business, you might want to visit the City, before you start things, because some people just don't know, they're naïve to some of this. I know when we revamped out building, it was a long process and we weren't real sure and I've been in government, it's like what do you do, what permits do I need, what kinds of things between the County and the State and you know everybody else, so it gets a little confusing at times. This Council has been great with people in understanding and Mark Taormina and his team and just our whole City and Paul and not to name names, but everybody has just been very cooperative and Todd, you know, you can't ask for better, so thank you.

Gagel said thank you for that and I agree. I've been before the Council before on other projects the bank has done, we have other branches here in Livonia as well. But Mr. Jolly, just to clarify something here, my conversation with Mr. Frankel was come back, see if you come back with something. If ultimately the internal design team says this is our design element, this is our corporate image, much like when I spoke with Mr. Frankel I mentioned to him about the red on the Big Boy, it doesn't match anything in the center either, he owns that building but he stated it goes towards their corporate image. If this is our corporate image and internally we can't make a change or not, I don't know where we'll be at at that point in time.

Jolly said I think you've done a great job clarifying everything that's gone on, I have nothing but positive thoughts in regard to what you've presented here tonight. One way or another we're going to take the final vote on this at the next meeting. This is only a study meeting so we can't give you a final approval tonight. Because it's undetermined what you will have to present as a final project at that point, we'll take the vote after looking at that. Otherwise we would have to take it as a consent item and as a consent item we don't typically vote on something when there's not a determined elevation and all that kind of stuff. So, make sure that we get the final product of whatever it is you're proposing, I don't anticipate it being a problem, not for me anyways, I can't speak for everybody else but I can't imagine it would be. I think you're in good standing, I would presume.

Gagel said I appreciate that and then based on that statement our other package today shows that we still have to install an awning above the front door and we put that on hold when we started coming to these meetings, but because of the time of year and what not, if that would not have a negative impact, I'd like to go head and proceed and get that awning in before the weather changes too much. It's below the brown, it's above the front door, there's a drawing in the package.

Jolly replied I think I speak for everybody where I said I think we'd all prefer you do it all at once.

Councilmember McCullough asked building permit wise, are you finaled on everything else and Gagel replied yes, we filed, we've got full building inspections, Certificate of Occupancy, fire. McCullough asked if there were any outstanding issues and Gagel replied I've got some minor punch list items to do on the interior but no, nothing outstanding other than the awning I mentioned on the exterior. McCullough said you guys knocked that renovation out in what, six weeks? Gagel replied we had four weeks to do it, that's typically our rate when we do a renovation like this, we shut down and try to get open as quickly as possible to minimize the impact of customer loss. McCullough then asked and you did the parking lot, too, and Gagel replied yes, we did, we did the parking lot as well.

DIRECTION: APPROVING REGULAR

LETTER TO THE LIVONIA CITY COUNCIL

9.

Planning
October 19, 2021

MEETING DATE	PREPARED BY
October 18, 2021	Stephanie Reece, Program Supervisor

AGENDA ITEM

SITE PLAN PETITION: Planning Commission, re: Petition 2021-08-08-05 submitted by Hellyer Lewis requesting to remodel the exterior of the Citizens Bank at 37307 Six Mile Road, located on the south side of Six Mile Road between Levan and Newburgh Roads in the Northwest ¼ of Section 17.

BACKGROUND

RECOMMENDATION

At the 1,176th Public Hearing and Regular Meeting held by the City Planning Commission on September 21, 2021, the following resolution was unanimously adopted:

#09-50-2021 RESOLVED, That the City Planning Commission does hereby recommend to City Council that Petition 2021-08-08-05 submitted by Hellyer Lewis requesting site plan approval pursuant to Section 5.01 of the Livonia Vision 21 Zoning Ordinance in connection with a proposal to remodel the exterior of the Citizens Bank at 37307 Six Mile Road, located on the south side of Six Mile Road between Levan and Newburgh Roads in the Northwest ¼ of Section 17, be approved subject to the following conditions:

1. That the Exterior Elevations Plans identified as No. A-1.03 and No. A-1,04, both dated August 13, 2021, as revised, prepared by Hellyer Lewis Inc., are hereby approved and shall be adhered to.

2. That the Petitioner shall submit a maintenance schedule to the Inspection Department indicating the annual inspections of the exterior of the building, and that the building shall be repainted at least every five (5) years, or sooner, as may be determined by the Inspection Department.

3. That the specific plans referenced in this approving resolution shall be submitted to the Inspection Department.

FISCAL CONSIDERATION

ATTACHMENTS

1. S101821 Additional New Data (Citizens Bank) Item 7 Recd 101821

2. S101821 New Data (Citizens Bank) Item 7 Recd 101821
3. S101821 New Data (Citizens Bank) Item 7 Recd 101421
4. 2021-08-08-05_Citizens Bank_E-COUNCIL Pkt

APPROVED BY

Date: September 27, 2021

Mark Taormina, Planning and Economic Development Director

Date: September 30, 2021

Maureen Miller Brosnan, Mayor

From: Taormina, Mark
To: Kasprowicz, Sara
Subject: FW: Citizens Bank - Newburgh Plaza
Date: Monday, October 18, 2021 1:48:39 PM
Attachments: Citizens Bank - Newburgh painting (drawings) 10182021.pdf

---

Mark Taormina
Planning and Economic Development Director
City of Livonia | Planning Department
(734) 466-2292
mtaormina@livonia.gov

From: Stuart Frankel <sfrankel@sfdco.com>
Sent: Monday, October 18, 2021 12:07 PM
To: Taormina, Mark <mtaormina@livonia.gov>
Subject: Citizens Bank - Newburgh Plaza

Dear Mark,

Attached, please find drawings showing the revisions to the exterior painting for Citizens Bank of Newburgh Plaza.

I've agreed to the green which I have circled but have not agreed to the brown Citizens marquee. Citizens Bank is in the process of reviewing and proposing various alternatives. Therefore, I would like to suggest a tabling of this matter until Citizens of Newburgh Plaza can agree on how to handle the brown marquee, subject to the approval of the City.

If you have any questions, please do not hesitate to contact me.

Stuart

Stuart Frankel
Owner
Stuart Frankel Development Company
1334 Maplelawn Drive
Troy MI 48084
248-649-2924

NEW DATA FOR STUDY MEETING OF 10/18/2021 - ITEM 7

From: Ken Bere
To: Kasprowicz, Sara
Cc: Miller, Scott; Reece, Stephanie; Gagel, Paul E; Sheely, Joshua M; Scott Pearson; Henry Lewis; Ken Bere
Subject: City of Livonia - City Council Study Meeting - New Submittals
Date: Monday, October 18, 2021 10:12:38 AM
Attachments: Option 1 - 07202_Newburgh-Livonia_Exterior Rendering.pdf
Option 2 - 07202_Newburgh-Livonia_Exterior Rendering-R1.pdf
Citizens Branches with New Portal.pdf
Newburgh-Livonia entry canopy details.pdf

Sara:

I am sending you these attachments at the request of Paul Gagel of Citizens Bank. Paul will attend the City Council Study Meeting this evening.

Option 1: Shows the painted green band on top. It is an example of multiple options, which Citizens Bank had provided to the landlord, Stuart Frankel.

Option 2: Shows the painted green band at the bottom. This option is the preferred one of Citizens Bank and the landlord, Stuart Frankel, based on the
conversation Paul Gagel had with him this past Friday. Paul understands that Stuart Frankel will be contacting the City of Livonia today about this matter.
Additionally, Stuart Frankel still does not like the dark brown finish of the composite wood panels of the new portal.

Citizens Branches with New Portal: The photos depict local examples, which show the change to the corporate image, as Citizens Bank remodels/renovates its branches.

Also, these first three attachments do not show the new entry canopy, whose installation was postponed until the other matters regarding the
exterior alterations had been studied, reviewed and approved by Livonia City Council. I attach a fourth pdf, which shows this new canopy
in the approved fabricator's shop drawings and in the elevations of the construction documents. The new entry canopy would be 3'-0" deep x 1'-0" high x 15'-8-1/4" long.
It is depicted frontally in Elevation 1/A-1.02, and on the sides in Elevations 2/A-1.02 and 1/A-1.03.

I trust that you will be able to also submit the attached materials as "New Data", when Council members review the information in the packet to be provided to them this evening.

If you have any questions or concerns about this e-mail and its attachments, please let me know immediately.

Yours truly,

Ken Bere

Kenneth M. Bere, AIA
Principal

HELLYER LEWIS, INC.

211 South 12th Street
Philadelphia, PA 19107

Telephone: 215.922.7066
Facsimile: 215.922.3778
Email: kbere@hellyerlewis.com

From: Gagel, Paul E <pgagel@citizensbank.com>
Sent: Monday, October 18, 2021 9:22 AM
To: Ken Bere <kbere@hellyerlewis.com>
Cc: Sheely, Joshua M <Joshua.Sheely@citizensbank.com>; Scott Pearson <spearson@hellyerlewis.com>; Henry Lewis <hlewis@hellyerlewis.com>
Subject: RE: City of Livonia - City Council Study Meeting - New Submittals

Ken,

Please submit the attached files to the City of Livonia as new information for tonight's Study Meeting.

Option 1 – Green on Top - Showing as an example that we provided multiple options to the LL
Option 2 – Green on Bottom - Preferred – By the Bank and LL as per my conversation with him on Friday. He is supposed to contact the City today. He still does not like the dark brown.
Citizens Branches with New Portal – local examples showing the change to our Corporate image as we remodel/renovate our branches

Not shown in the attached renderings. The Canopy. Do you have a separate sheet showing that we will still be adding the canopy at this location? We've put this on hold due to the meetings but I want to be fully transparent so they know we will be installing this element.

Thanks

Regards,

Paul Gagel
Senior Project Manager VP, Business Service - Projects
Citizens
27777 Franklin Road Southfield MI 48034 - MH1905
O: 248-226-7871 M: 313-378-9032 pgagel@citizensbank.com
citizensbank.com

This message is confidential and subject to terms at: https://www.citizensbank.com/account-safeguards/overview.aspx. If you are not the intended recipient, please delete this message and

NOTE:

-FRAME TO BE ALUMINUM
-FINISH TO BE POWDER COATED
-COLOR TO BE - SW 6927 GREENBELT

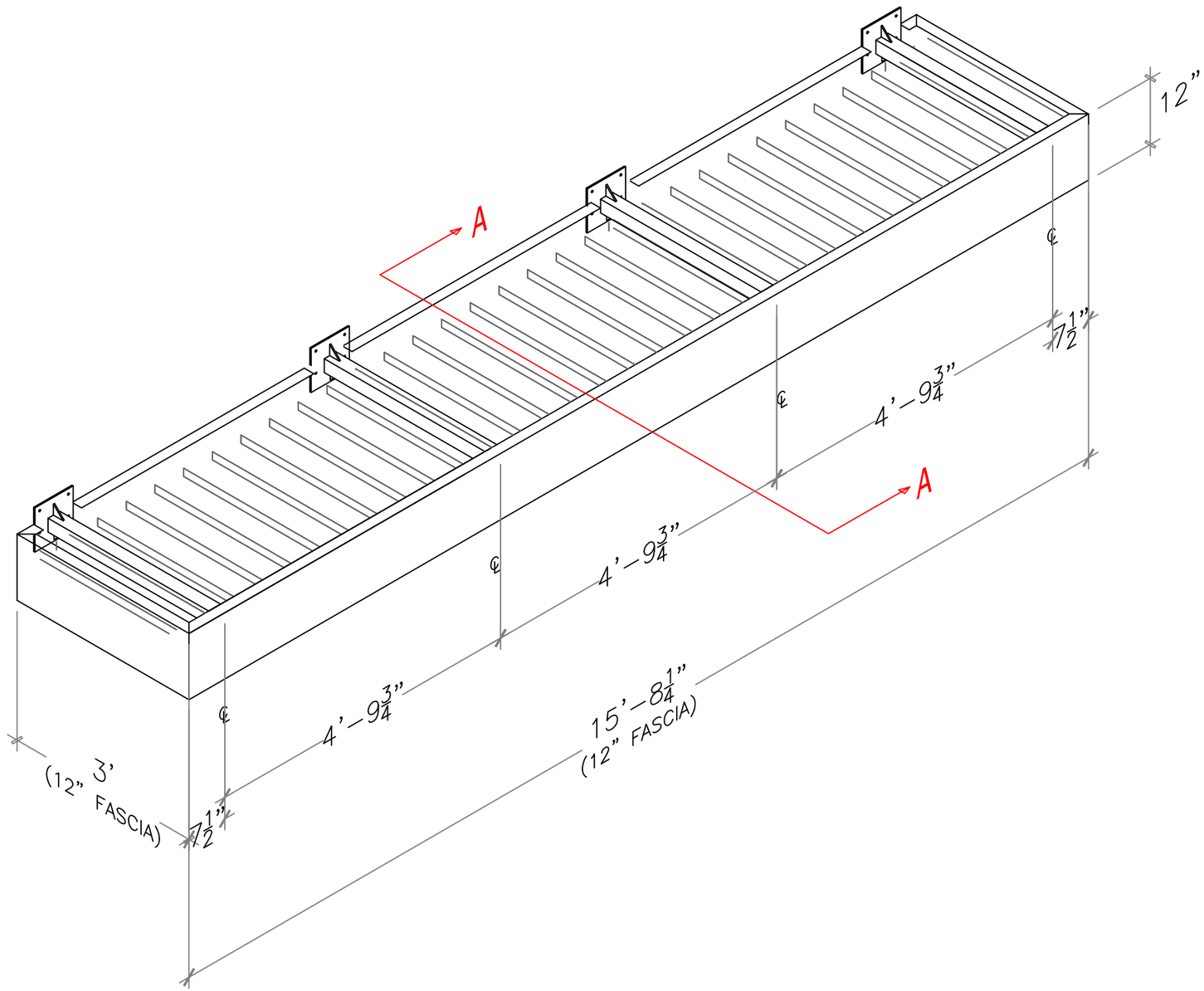

ISOMETRIC VIEW

☒ APPROVED ☐ FURNISH AS CORRECTED
☐ REJECTED ☐ REVISE AND SUBMIT
☐ SUBMIT SPECIFIC ITEM

This review was performed only for general conformance with the design concept of the project and general compliance with the information given in the Contract Documents. Modification of comments made on the shop drawings during this review do not relieve contractor from compliance with the requirements of the plans and specifications. Approval of a specific item does not include approval of the assembly of which the item is a component. Contractor is responsible for: dimensions to be confirmed and correlated at the jobsite; information that pertains solely to the fabrication processes or to the means, methods, techniques, sequences, and procedure of construction; coordination of the work of all trades; and for performing all work in a safe and satisfactory manner.

HELLYER LEWIS INC.
Date 6/10/2021 By Scott Pearson

JOB#: 109433
PROJECT: CITIZENS BANK
LOCATION: 37307 SIX MILE RD
CITY: LIVONIA, MI
PROJECT MANAGER: J. STEMPIEN
DRAFTED BY: S.HEFLENG
DATE: 05/10/2021
REVISION DATE:
REVISION DATE:
REVISION DATE:
REVISION DATE:

Awning and Sign Contractors
A BEAGLE ONE, INC. COMPANY
www.awningandsigncontractors.net
888-665-1521 (office)
877-571-9924 (fax)
Corporate
Beagle One, Inc.
203 W. Harcourt Rd.
Angola, IN 46703
Local
Awning & Sign Contractors
1710 Industrial Drive,
Edgewater, FL 32132
www.awningandsigncontractors.net
© 2016

SHEET: A-03

NOTE:

-FRAME TO BE ALUMINUM
-FINISH TO BE POWDER COATED
-COLOR TO BE - SW 6927 GREENBELT

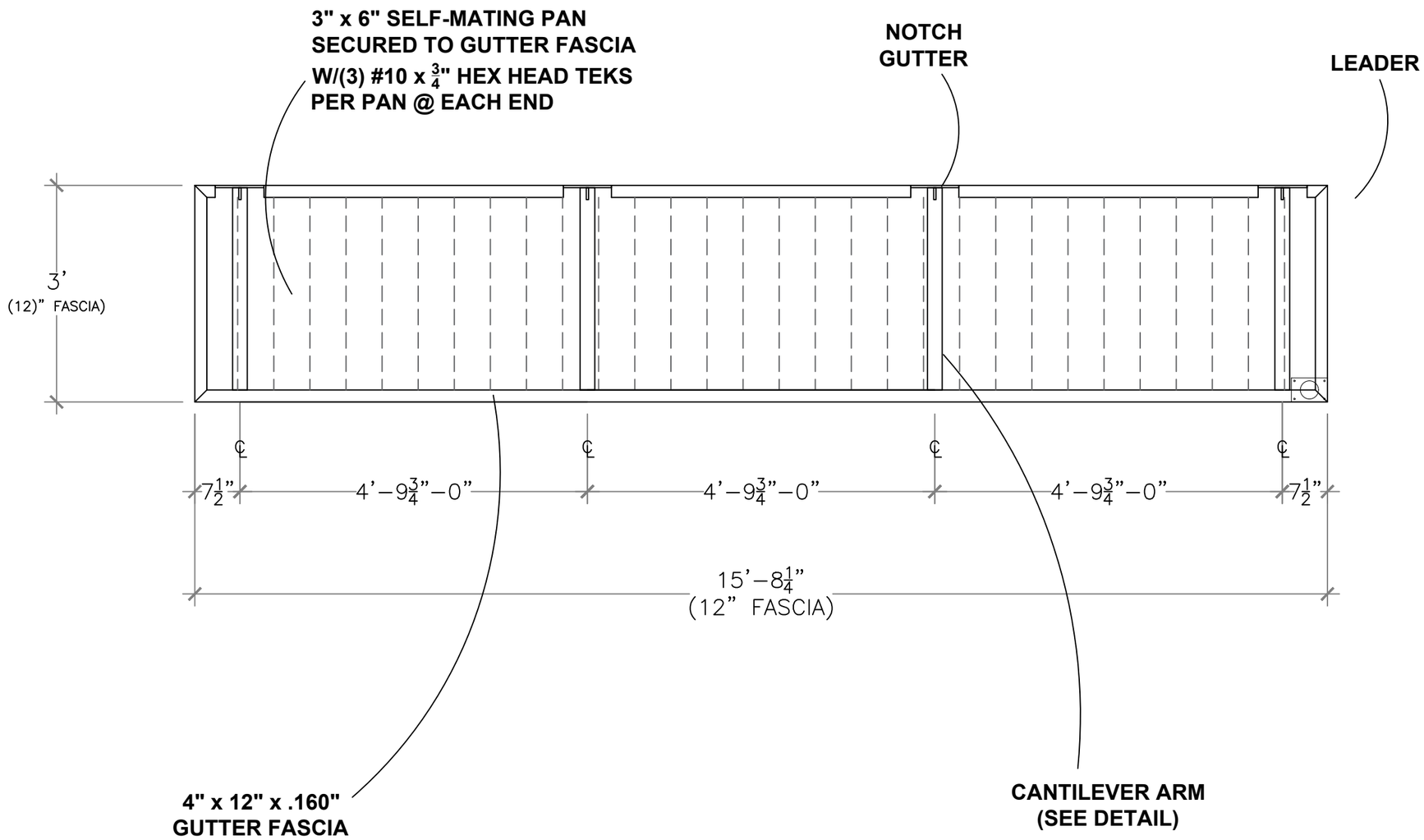

PLAN VIEW

JOB#: 109433

PROJECT: CITIZENS BANK

LOCATION: 37307 SIX MILE RD

CITY: LIVONIA, MI

PROJECT MANAGER: J. STEMPIEN

DRAFTED BY: S.HEFLENG

DATE: 05/10/2021

REVISION DATE:

REVISION DATE:

REVISION DATE:

REVISION DATE:

Awning and Sign Contractors
A BEAGLE ONE, INC. COMPANY
www.awningandsigncontractors.net

888-665-1521 (office)
877-571-9924 (fax)

Corporate
Beagle One, Inc.
203 W. Harcourt Rd.
Angola, IN 46703

Local
Awning & Sign Contractors
1710 Industrial Drive,
Edgewater, FL 32132
www.awningandsigncontractors.net

© 2016

SHEET: A-04

NOTE:

-FRAME TO BE ALUMINUM
-FINISH TO BE POWDER COATED
-COLOR TO BE - SW 6927 GREENBELT

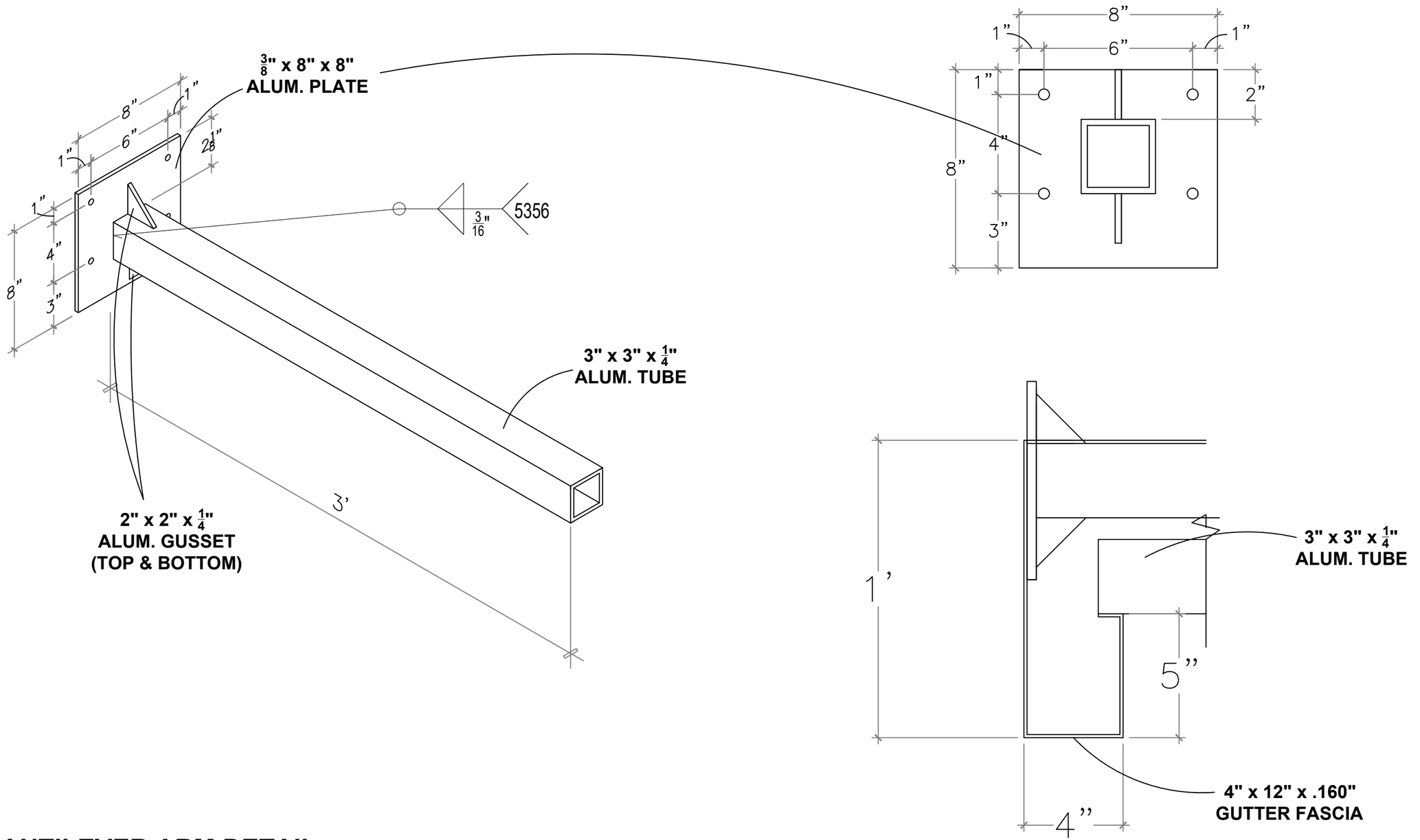

CANTILEVER ARM DETAIL

JOB#:	109433
PROJECT:	CITIZENS BANK
LOCATION:	37307 SIX MILE RD
CITY:	LIVONIA, MI
PROJECT MANAGER:	J. STEMPIEN
DRAFTED BY:	S.HEFLENG
DATE:	05/10/2021
REVISION DATE:	
REVISION DATE:	
REVISION DATE:	
REVISION DATE:	

Awning and Sign Contractors
A BEAGLE ONE, INC. COMPANY
www.awningandsigncontractors.net
888-665-1521 (office)
877-571-9924 (fax)

Corporate
Beagle One, Inc.
203 W. Harcourt Rd.
Angola, IN 46703

Local
Awning & Sign Contractors
1710 Industrial Drive,
Edgewater, FL 32132
www.awningandsigncontractors.net

© 2016

SHEET: A-05

NOTE:

-FRAME TO BE ALUMINUM
-FINISH TO BE POWDER COATED
-COLOR TO BE - SW 6927 GREENBELT

NOTE:

NOTE: WE WILL PROVIDE EIGHT ½" THREADED ROD AT 18" WITH NUTS AND WASHERS ON EACH END. AND WE WILL ALSO PROVIDE EIGHT ½" BOLTS AT 1 1/2 " WITH NUTS AND WASHERS

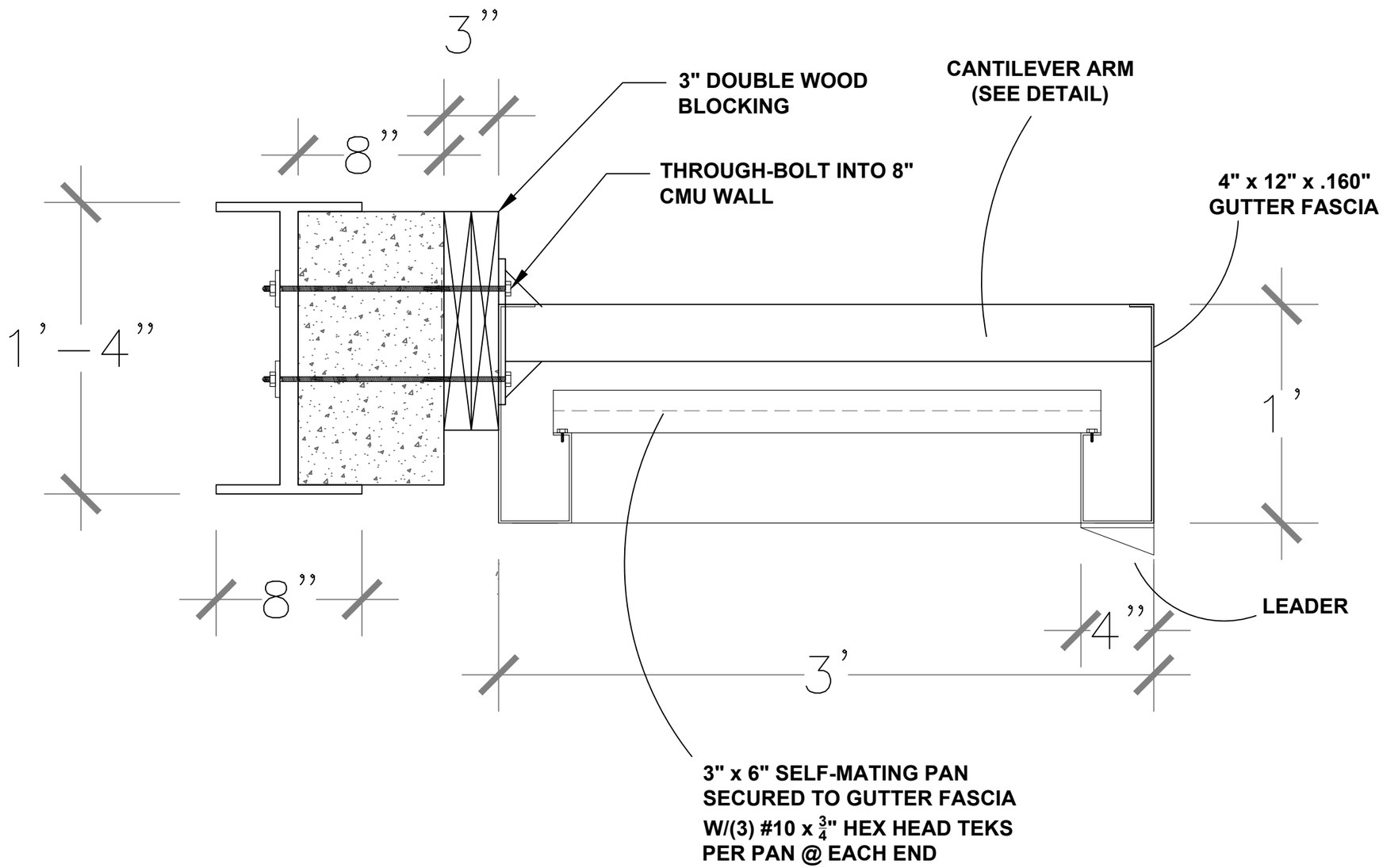

SECTION A-A

JOB#: 109433

PROJECT: CITIZENS BANK

LOCATION: 37307 SIX MILE RD

CITY: LIVONIA, MI

PROJECT MANAGER: J. STEMPIEN

DRAFTED BY: S.HEFLENG

DATE: 05/10/2021

REVISION DATE:

REVISION DATE:

REVISION DATE:

REVISION DATE:

Awning and Sign Contractors
A BEAGLE ONE, INC. COMPANY
www.awningandsigncontractors.net

888-665-1521 (office)
877-571-9924 (fax)

Corporate
Beagle One, Inc.
203 W. Harcourt Rd.
Angola, IN 46703

Local
Awning & Sign Contractors
1710 Industrial Drive,
Edgewater, FL 32132

www.awningandsigncontractors.net © 2016

SHEET: A-06

NOTE:

-FRAME TO BE ALUMINUM
-FINISH TO BE POWDER COATED
-COLOR TO BE - SW 6927 GREENBELT

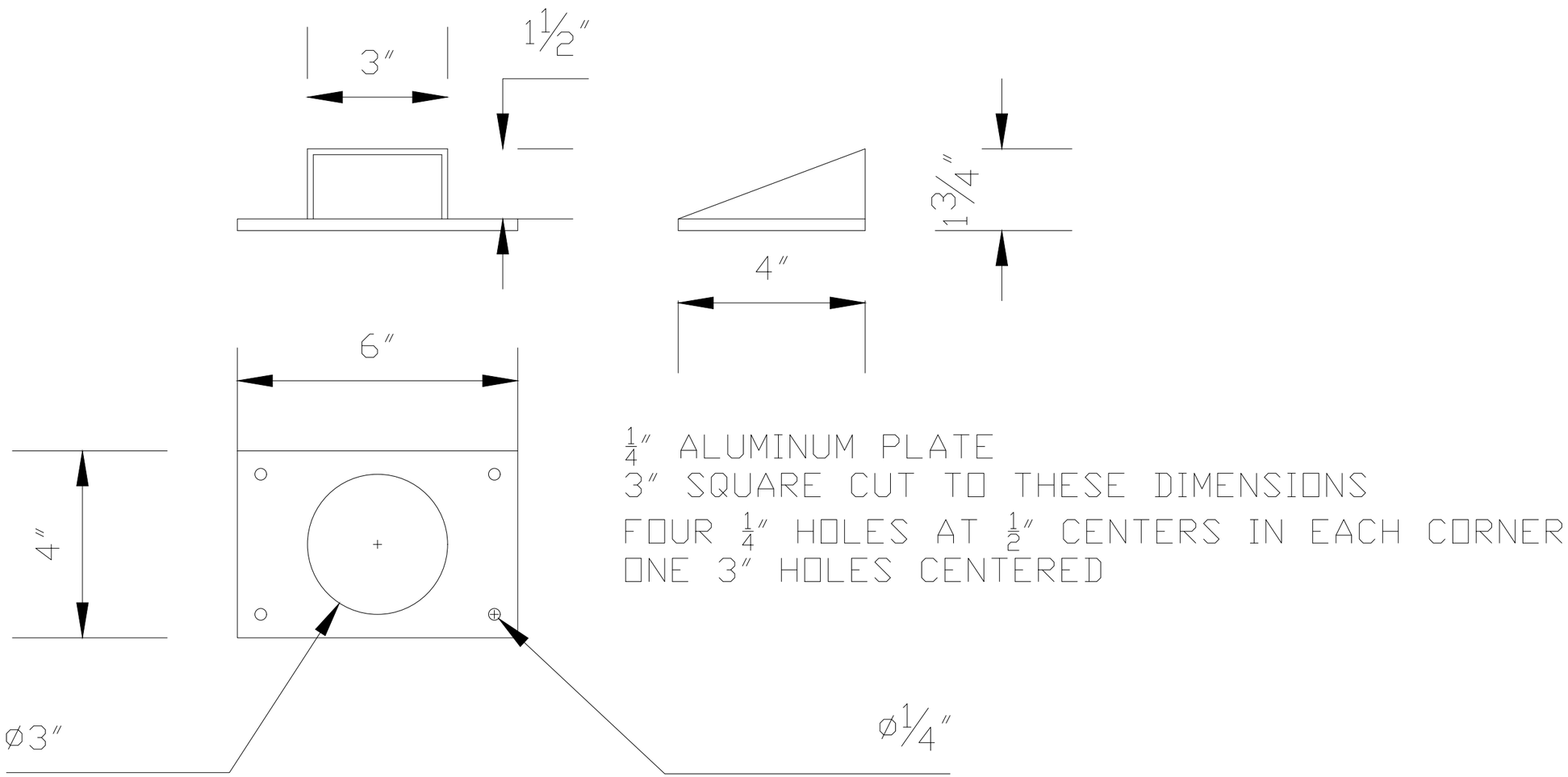

LEADER

JOB#:	109433
PROJECT:	CITIZENS BANK
LOCATION:	37307 SIX MILE RD
CITY:	LIVONIA, MI
PROJECT MANAGER:	J. STEMPIEN
DRAFTED BY:	S.HEFLENG
DATE:	05/10/2021
REVISION DATE:	
REVISION DATE:	
REVISION DATE:	
REVISION DATE:	

Awning and Sign Contractors
A BEAGLE ONE, INC. COMPANY
www.awningandsigncontractors.net

888-665-1521 (office)
877-571-9924 (fax)

Local
Awning & Sign Contractors
1710 Industrial Drive,
Edgewater, FL 32132

Corporate
Beagle One, Inc.
203 W. Harcourt Rd.
Angola, IN 46703

www.awningandsigncontractors.net

© 2016

SHEET: A-06

EXTERIOR FINISH SCHEDULE

NO.	DESCRIPTION	MANUFACTURER	MODEL NO./COLOR/FINISH	REMARKS
PAINT SUFFIX LEGEND: FL = FLAT, SG = SEMI-GLOSS, GL = GLOSS, LA = LACQUER, ST = WOLF GORDON, SCRUBTOUGH				
PAINT				
EP-2 SG	EXTERIOR PAINT	BENJAMIN MOORE	COLOR: LIGHT PEWTER #1464 FINISH: SEMI-GLOSS (632) PRODUCT TYPE: BENJAMIN MOORE AURA EXTERIOR PAINT	•LOCATION: EXTERIOR, FACADE
EP-7	EXTERIOR PAINT	SHERWIN WILLIAMS	COLOR: GREENBELT # SW 6927 FINISH: TBD, BASED ON SITE CONDITIONS PRODUCT TYPE: BENJAMIN MOORE AURA EXTERIOR PAINT	•LOCATION: EXTERIOR, ACCENT
FACADE TREATMENT				
CL-4	COMPOSITE WOOD SIDING	NEWTECHWOOD	MODEL:"ULTRASHIELD" COLOR: BRAZILIAN IPE DIMENSION: 5.5" X 16'-0"	•LOCATION: EXTERIOR, FACADE

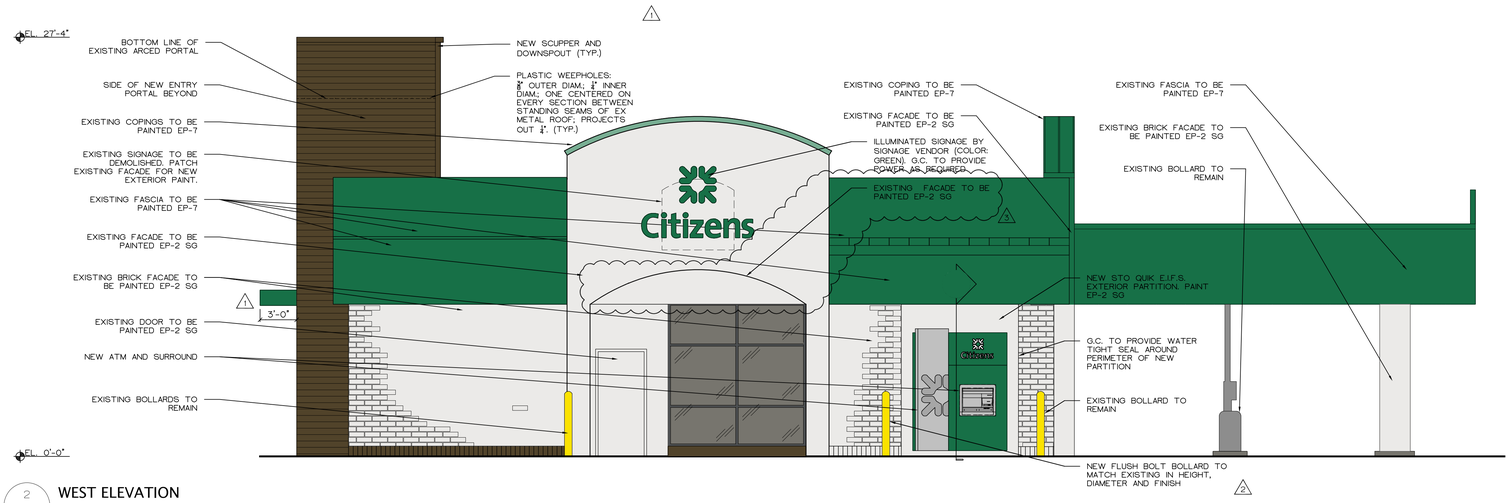

2 A-1.02 **WEST ELEVATION**
SCALE: 1/4" = 1'-0"

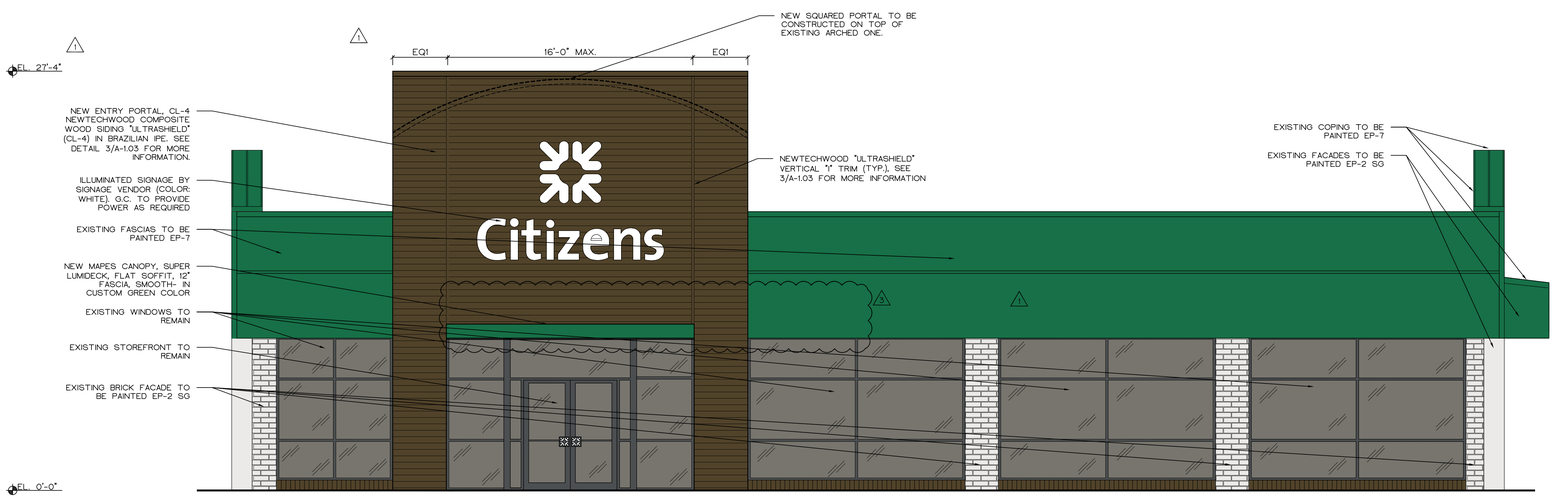

1 A-1.02 **NORTH ELEVATION**
SCALE: 1/4" = 1'-0"

HELLYER LEWIS Inc.
ARCHITECTURE
INTERIOR DESIGN

211 South 12th St.
Phila., PA 19107
215.922.7066

THE GENERAL CONTRACTOR IS RESPONSIBLE TO VERIFY ALL DIMENSIONS ON SITE AND CONFIRM SUCH DIMENSIONS AGAINST ACTUAL SITE CONDITIONS. THE GENERAL CONTRACTOR SHALL COORDINATE ALL WORK AND RELATED TRADES, AND SHALL NOTIFY THE ARCHITECT OF ANY INTERFERENCE OF MECHANICAL, ELECTRICAL, OR PLUMBING WORK WITH THE ARCHITECTURAL WORK AND OF ANY CONFLICTS OR DISCREPANCIES IN DIMENSIONS AGAINST ON SITE CONDITIONS PRIOR TO PROCEEDING WITH THE WORK OR PROCUREMENT OF MATERIALS.

Project:

Citizens

Newburgh Branch
37307 Six Mile Road
Livonia, MI 48154

Project No: 072.02

Drawn by:	JP
Checked by:	SP/KS
Approved by:	KMB

Client Approval:	Date:
Issued for DD Review	12/11/20

Issued for Bid:	01/08/21
Issued for Permit:	01/22/21

No.	Date	Revision
1	01/29/21	Revision #1
2	02/24/21	Revision #2
3	05/07/21	Revision #5
4	08/13/21	REISSUED TO CITY OF LIVONIA

Scale: 1/4" = 1'-0"

Drawing:
Exterior Elevations

No. A-1.02

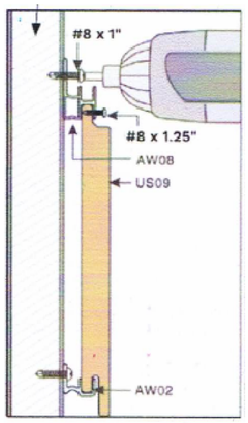

AW-08 CLIP WITH LOCKING

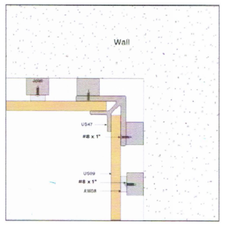

US47 INSIDE CORNER TRIM

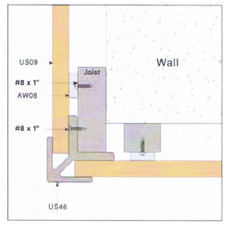

US46 OUTSIDE CORNER TRIM

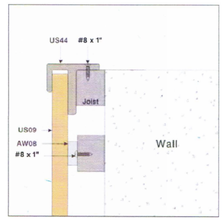

US44 "F" TRIM

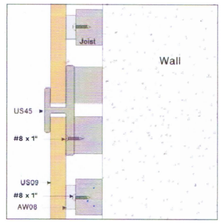

US45 "I" TRIM

3 / A-1.03 NEWTECHWOOD "ULTRASHIELD" TRIM DETAILS

SCALE: N.T.S.

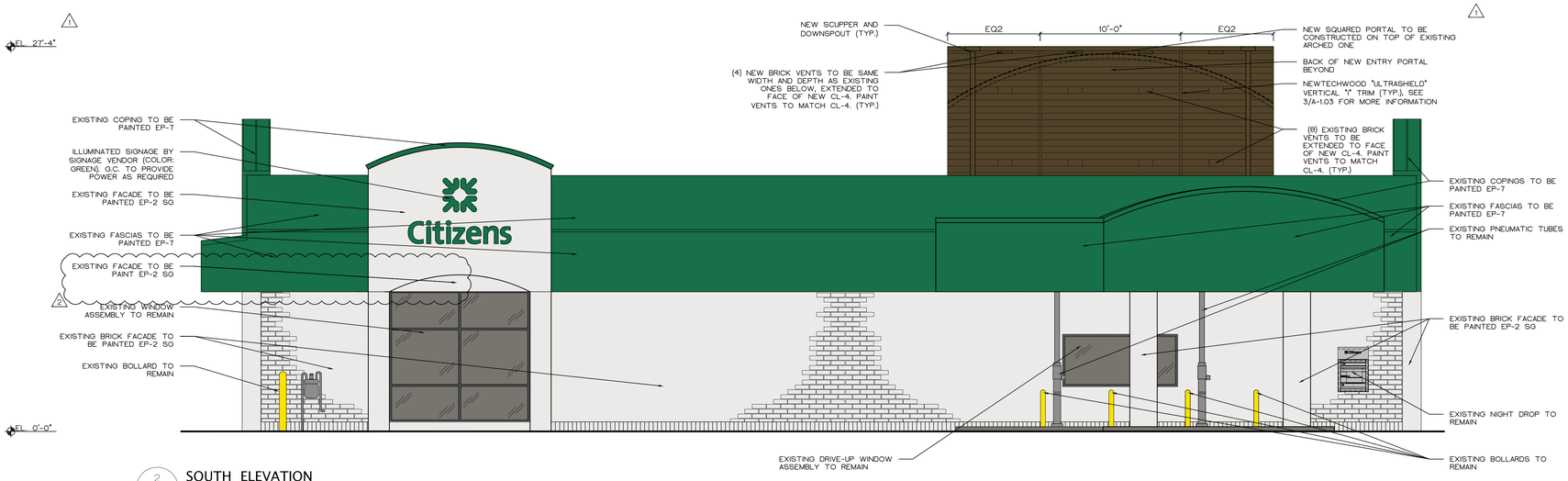

2 / A-1.03 SOUTH ELEVATION

SCALE: 1/4" = 1'-0"

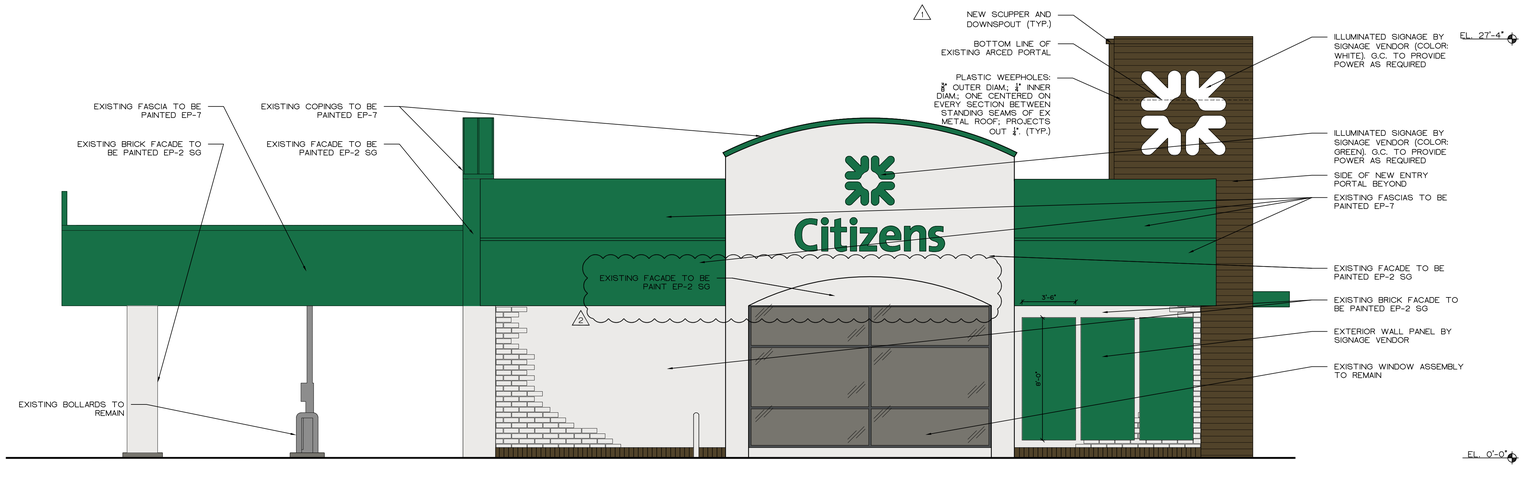

1 / A-1.03 EAST ELEVATION

SCALE: 1/4" = 1'-0"

REFER TO A-1.02 FOR EXTERIOR FINISH SCHEDULE

HELLYER LEWIS Inc.
ARCHITECTURE
INTERIOR DESIGN

211 South 12th St.
Phila., PA 19107
215.922.7066

THE GENERAL CONTRACTOR IS RESPONSIBLE TO VERIFY ALL DIMENSIONS ON SITE AND CONFIRM SUCH DIMENSIONS AGAINST ACTUAL SITE CONDITIONS. THE GENERAL CONTRACTOR SHALL COORDINATE ALL WORK AND RELATED TRADES, AND SHALL NOTIFY THE ARCHITECT OF ANY INTERFERENCE OF MECHANICAL, ELECTRICAL, OR PLUMBING WORK WITH THE ARCHITECTURAL WORK AND OF ANY CONFLICTS OR DISCREPANCIES IN DIMENSIONS AGAINST ON SITE CONDITIONS PRIOR TO PROCEEDING WITH THE WORK OR PROCUREMENT OF MATERIALS.

Project:

Citizens

Newburgh Branch
37307 Six Mile Road
Livonia, MI 48154

Project No: 072.02

Drawn by:	JP
Checked by:	SP/KS
Approved by:	KMB

Client Approval:	Date:
Issued for DD Review	12/11/20
Issued for Bid:	01/08/21
Issued for Permit:	01/22/21

No.	Date	Revision
1	01/29/21	Revision #1
2	05/07/21	Revision #5
3	08/13/21	REISSUED TO CITY OF LIVONIA

Scale: 1/4" = 1'-0"

Drawing:
Exterior Elevations

No. A-1.03

Option 1

Existing View 1

Proposed View 1

Exterior Rendering for Newburgh-Livonia Branch
37307 Six Mile Road, Livonia MI, 48152

Citizens Bank®

DATE: 10/04/21
REVISION: -
SCALE: NOT TO SCALE

HELLYER LEWIS INC
ARCHITECTURE INTERIOR DESIGN

Existing View 2

Proposed View 2

Exterior Rendering for Newburgh-Livonia Branch
37307 Six Mile Road, Livonia MI, 48152

Citizens Bank®

DATE: 10/04/21
REVISION: -
SCALE: NOT TO SCALE

HELLYER LEWIS
ARCHITECTURE INTERIOR DESIGN

Option 2

Existing View 1

Proposed View 1

Exterior Rendering for Newburgh-Livonia Branch
37307 Six Mile Road, Livonia MI, 48152

Citizens Bank®

DATE: 10/04/21
REVISION: R1
SCALE: NOT TO SCALE

HELLYER LEWIS INC
ARCHITECTURE INTERIOR DESIGN

Existing View 2

Proposed View 2

Exterior Rendering for Newburgh-Livonia Branch
37307 Six Mile Road, Livonia MI, 48152

Citizens Bank®

DATE: 10/04/21
REVISION: R1
SCALE: NOT TO SCALE

HELLYER LEWIS INC
ARCHITECTURE INTERIOR DESIGN

Local Citizens Branches with New Portal

200 South Main Street
Royal Oak, MI 48067

25350 Ford Road
Dearborn Heights, MI 48127

NEW DATA RECEIVED FOR STUDY MEETING OF 10/18/2021 - ITEM 7

CITIZENS BUILDING MAINTENANCE PLAN – MIB 795 NEWBURGH

Location:	MIB 795 Newburgh 37307 W 6 Mile Road Livonia MI 48152
Purpose:	As part of the branch renovation in 2021 the brick exterior of the building was painted. To ensure the building maintains a new and fresh appearance this plan outlines the guidelines for our Facility Management team.
Inspections:	Property inspections will occur every six months to review the conditions of the exterior of the building. Deficiencies identified during inspections will be recorded in 360 the banks Facility Management software tool for property maintenance.
Repairs:	A work order will be created in 360 to engage the appropriate resource to affect the necessary repairs for any deficiency. The assigned resource will affect the repairs in a timely manner. The Facility Manager will review and confirm the work was performed in a satisfactory manner and either close the work order or have the resource return and repeat the repair until it meets the bank standards.
Exterior Finish Schedule: For quick reference in the event paint repairs are necessary	EXTERIOR FINISH SCHEDULE

NO.	DESCRIPTION	MANUFACTURER	MODEL NO./COLOR/FINISH	REMARKS
PAINT SUFFIX LEGEND: FL = FLAT, SG = SEMI-GLOSS, GL = GLOSS, LA = LACQUER, ST = WOLF GORDON, SCRUBTOUGH				
PAINT				
EP-2 SG	EXTERIOR PAINT	BENJAMIN MOORE	COLOR: LIGHT PEWTER #1464 FINISH: SEMI-GLOSS (632) PRODUCT TYPE: BENJAMIN MOORE AURA EXTERIOR PAINT	•LOCATION: EXTERIOR, FACADE
EP-7	EXTERIOR PAINT	SHERWIN WILLIAMS	COLOR: GREENBELT # SW 6927 FINISH: TBD, BASED ON SITE CONDITIONS PRODUCT TYPE: BENJAMIN MOORE AURA EXTERIOR PAINT	•LOCATION: EXTERIOR, ACCENT
FACADE TREATMENT				
CL-4	COMPOSITE WOOD SIDING	NEWTECHWOOD	MODEL: "ULTRASHIELD" COLOR: BRAZILIAN IPE DIMENSION: 5.5" X 16'-0"	•LOCATION: EXTERIOR, FACADE

Building Painting	In addition to the bi-annual inspections the building will be assessed every two years for wear and tear on the painted surfaces. If repainting this branch is necessary, it will be added to the Capital budget list to request funding for repainting the building. Once funding is secured the appropriate resource will be engaged to paint the building.
Exterior Check List	See Next Page

CITIZENS BUILDING MAINTENANCE PLAN – MIB 795 NEWBURGH

EXTERIOR CHECKLIST:

Key: 1 = Good 2 = Declining 3 – Needs Repair

Area	Date	Rating	Comments
Façade – Paint Light Pewter			
Accent - Paint Greenbelt			
Portal – Composite Wood Siding			
Parking Lot – Asphalt			
Parking Lot – Striping			
Parking Lot – Curbs			
Parking Lot - Concrete			
Parking Lot – Catch Basins			
Parking Lot - Lights			
Sidewalks			
Sidewalks - Ramps			
Bollards			
Drive Thru Canopy			
Signage – Wall Signs			
Signage – Pylon			
Signage – Night Drop Surround			
Signage – Drive up ATM Surround			
Signage – Directional			
Drive Thru Equipment			
Trash Enclosure			
Landscaping – Citizens Greenbelts			
Landscaping - Irrigation			
Landscaping - LL Easement			

Inspection Completed By: _____

Newburgh Branch Exterior Painting

Addendum to the Citizens Building Maintenance Plan

As a resolution to the concerns issued by the Planning Committee, in addition to the stated inspections and repairs listed in the Building Maintenance Plan, Citizens Bank is committed to painting the exterior of the branch located at 37307 W. 6 Mile Road in Livonia Michigan at least once every five years for as long as we own the building.

Cristl Rabideaux
Facility Manager

Petition 2021-08-08-05 submitted by Hellyer Lewis requesting approval of all plans required by Sections 18.47 and 18.58 of the City of Livonia Zoning Ordinance #543, as amended, in connection with a proposal to remodel the exterior of the Citizens Bank at 37307 Six Mile Road, located on the south side of Six Mile Road between Levan and Newburgh Roads in the Northwest ¼ of Section 17.

CITY OF LIVONIA, MICHIGAN
APPLICATION FOR SITE PLAN REVIEW & APPROVAL

All petitions for Site Plan Approval shall be filed with the City Planning Commission, 33000 Civic Center Drive, Livonia, MI 48154-3097. Filing fee = $600.00 plus $20.00 for each 1,000 square feet of gross floor area of new construction, not to exceed a total of $1,500.00

Date Filed: 8-13-21 Petition 2021-08-08-05

Site Address: 37307 SIX MILE RD. LIVONIA Sidwell

Requesting Approval to APPLY NEW PORTAL & CANOPY OVER MAIN ENTRANCE; REFINISH OTHER EXTERIOR ELEMENTS OF BLDG.

Applicant: KENNETH M. BERE Business/Company: HELLYER LEWIS

Applicant's Address: 211 S. 12th ST. City: PHILADELPHIA State: PA Zip Code: 19107

Applicant's Phone # (215) 922-7066 Applicant's Email kbere@hellyerlewis.com

Contact Person: PAUL GAGEL Business/Company: CITIZENS BANK

Contact's Address: 27777 FRANKLIN RD City: SOUTHFIELD State: MI Zip Code: 48034

Contact's Phone # (313) 378-9032 Contact's Email pgagel@citizensbank.com

Please provide the following information:

1) **Site Plan** showing:
   - property dimensions, including road right-of-way & building setback lines
   - foot print of building(s), including dimensions & square footage
   - all easements, protective walls, sidewalks & existing trees
   - any significant topographic features (existing or proposed)
   - parking layout, including type of surface material, sizes of spaces & aisles
   - method used in calculating parking requirement
   - location of light standards servicing parking lot & cutout showing type & height
   - location of trash receptacle, including description of screening
   - location of signs (if proposed must submit separate sign application)
2) **Detailed Landscape Plan** including:
   - listing or labeling of all planted materials as to type and size
   - areas to be fully irrigated
   - percentage of landscaping provided (15% of total site required)
3) **Building Elevation Plan** depicting:
   - architectural quality
   - wall section & detail plan - exterior building materials must be labeled (i.e. brick, thin brick, E.F.I.S.)
   - all visible rooftop mechanical equipment and how they will be screened
4) **General Floor Plan** showing:
   - floor layout
   - entrances & exits
   - restaurants are required to illustrate seating arrangement & capacity
5) One (1) set of reduced plans (i.e. site, landscape, elevation, floor) a maximum 11" x 17" in size, or digital file in .pdf format either on CD or emailed to sbailey@livonia.org
6) **Legal Description** of the property to be considered (Clearly Printed)
7) One (1) completed application form & **three (3)** sets of full-size drawings

RECEIVED
AUG 16 2021
CITY OF LIVONIA
PLANNING COMMISSION

You are invited and encouraged to review your proposal with the Planning Department staff. Only one set of preliminary drawings will be necessary for this analysis.

FEE COMPUTATION

250 sq. ft. of new construction x $20.00 per 1,000 sq. ft. $600.00
(NOTE: Round off to nearest 1,000) + 20.00
Total Amount Due $ 620.00

Owner of Property: PAUL GAGEL OF CITIZENS BANK

Owner's Address: 27777 FRANKLIN RD City: SOUTHFIELD State: MI Zip Code: 48034

Owner's Phone # (313) 378-9032 Owner's Email pgagel@citizensbank.com

Signature of Owner: Paul Gagel Print Name: PAUL GAGEL

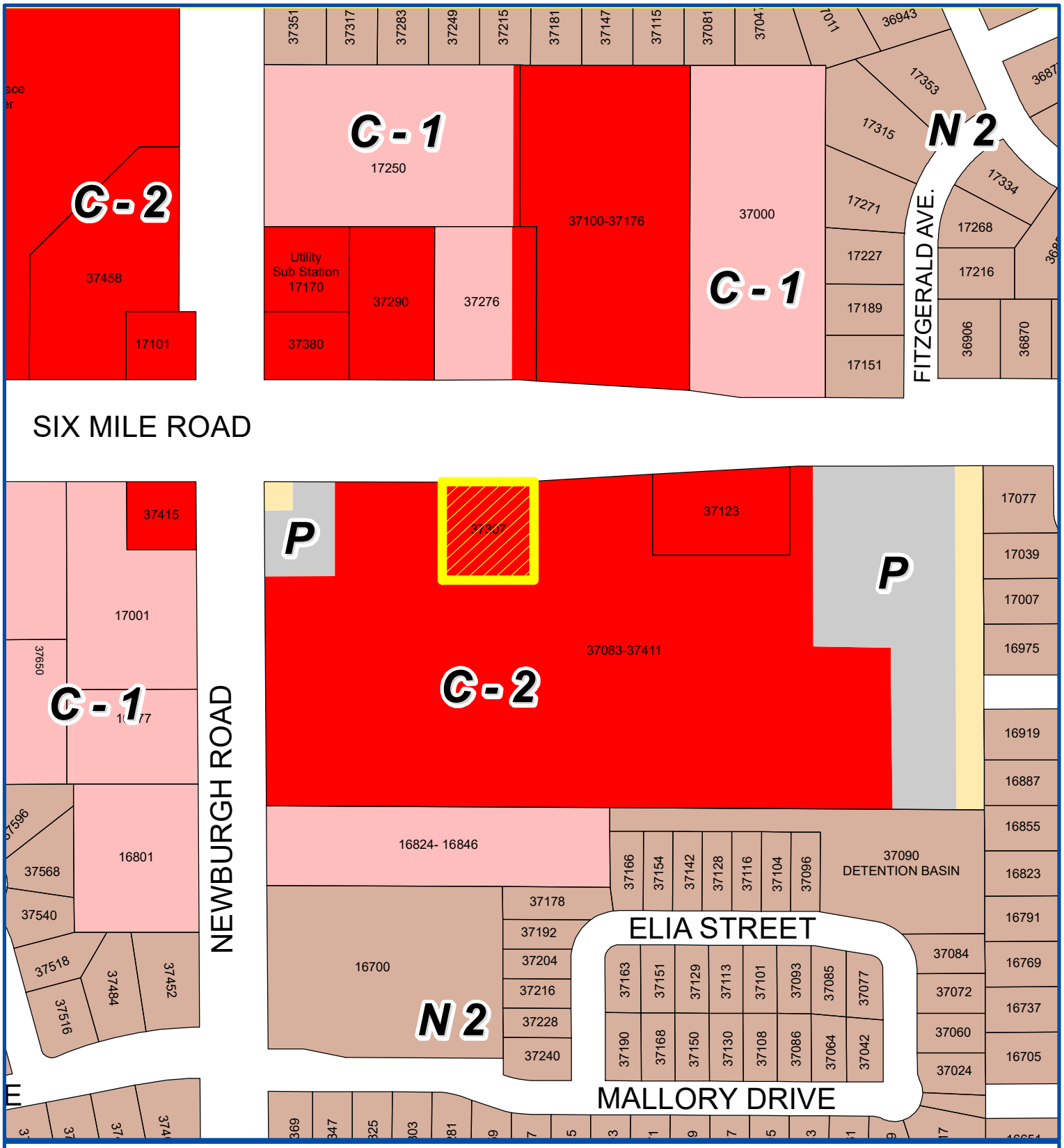

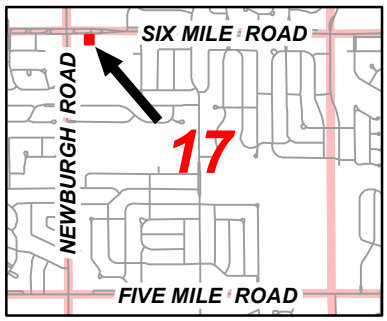

Address & Zoning Map

Petition 2021-08-08-05
Citizens Bank
37307 Six Mile Road
to remodel the front entrance and paint over the building's existing exterior brick

N

Not to Scale

City of Livonia
Planning Department

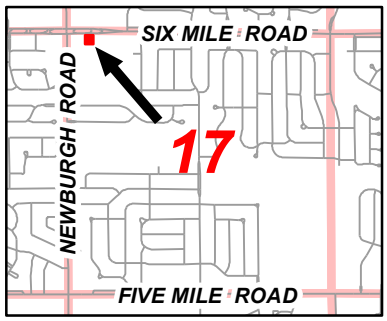

Aerial Map

Petition 2021-08-08-05
Citizens Bank
37307 Six Mile Road
to remodel the front entrance and paint over the building's existing exterior brick

N

Not to Scale

City of Livonia
Planning Department

PLANNING COMMISSION STAFF NOTES

MISCELLANEOUS

ITEM 3

Petition 2021-08-08-05 submitted by Hellyer Lewis requesting site plan approval pursuant to Section 5.01 of the Livonia Vision 21 Zoning Ordinance in connection with a proposal to remodel the exterior of the Citizens Bank at 37307 Six Mile Road, located on the south side of Six Mile Road between Levan and Newburgh Roads in the Northwest ¼ of Section 17.

September 14, 2021: Study Meeting:

This is an 'after-the-fact' request involving renovations to the exterior of the Citizens branch bank located at the Newburgh Plaza shopping center at the southeast corner of Six Mile and Newburgh Roads. The subject site is zoned C-2 (General Business).

The shopping center and bank properties are located within a Special Area Development Control zone. There are seven (7) of these zones throughout the City that are subject to special regulations pursuant to Section 5.01 of the LV21 Zoning Ordinance. Section 5.01 includes a provision that requires exterior building alterations first be approved by City Council upon submission of findings by the Planning Commission. The work at the Citizens Bank was completed without the prior approval of the City. According to the Petitioner, plans were submitted to the City's Inspection Department that showed both the interior and exterior work; however, unbeknownst to the contractor, the permit that was issued only applied to the interior renovations and excluded the exterior work.

In addition to whitewashing the exterior brick, the main entrance, located on the north side of the building facing Six Mile Road, has been remodeled. Previously, the entrance was defined by a brick tower feature that had an arched roofline. The brick on this structure was either replaced or covered with composite wood siding and the roofline was squared-off. Additionally, the EIFS panels along the top half of the building that were previously a beige color have been painted green.

No other site changes or improvements are proposed as part of this petition.

September 21, 2021: Regular Meeting:

A major concern is whether the exterior brick on the building can be effectively restored through power washing, sandblasting and regrouting. When the original First Federal of Michigan was relocated to make room for Busch's supermarket, the intent was to maintain a unified architectural appearance between the bank and the surrounding plaza. With the recent changes made by Citizens Bank, this is no longer the case. All of the brick has been painted white and the upper fascia painted a bright green color, making the design inconsistent with the brown and beige colors of the plaza. Staff's recommendation is that this item be tabled to allow the Petitioner additional time to develop a color scheme that is more consistent with the design of the plaza.

Approving Resolution: That the request to remodel the exterior of the Citizens Bank at 37307 Six Mile Road, is hereby approved, subject to City Council approval and the following conditions:

1. That the Exterior Elevations Plans identified as No. A-1.03 and No. A-1,04, both dated August 13, 2021, as revised, prepared by Hellyer Lewis Inc., are hereby approved and shall be adhered to.

2. That the Petitioner shall submit a maintenance schedule to the Inspection Department indicating the annual inspections of the exterior of the building, and.

3. That the specific plans referenced in this approving resolution shall be submitted to the Inspection Department.

Denying Reasons: That the request to remodel the exterior of the Citizens Bank at 37307 Six Mile Road is hereby denied for the following reasons:

1. That the petitioner has failed to comply with all general standards and requirements as set forth in Section 5.01 of the Livonia Vision 21 Zoning Ordinance.

2. That the painting of the exterior brick of the building was done without the approval of the City.

3. That painted brick becomes a maintenance issue and in due time chips and fades.

4. That the appearance of the building is now inconsistent with the surrounding shopping center; and

5. That the paint shall be removed immediately from the exterior brick of the building.

Citizens Bank®

Newburgh Branch

37307 Six Mile Road, Livonia, MI 48152

KEY PLAN

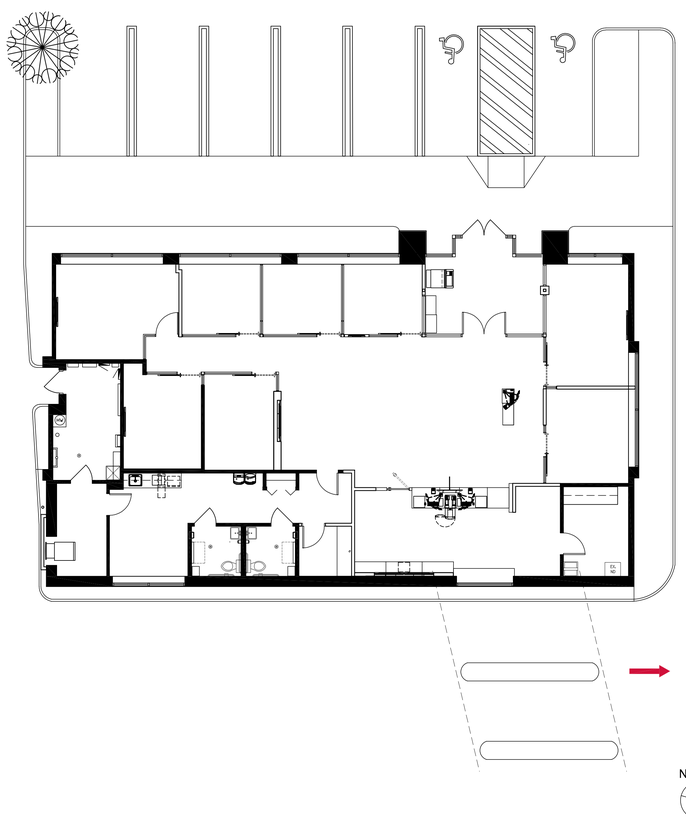

SITE LOCATION

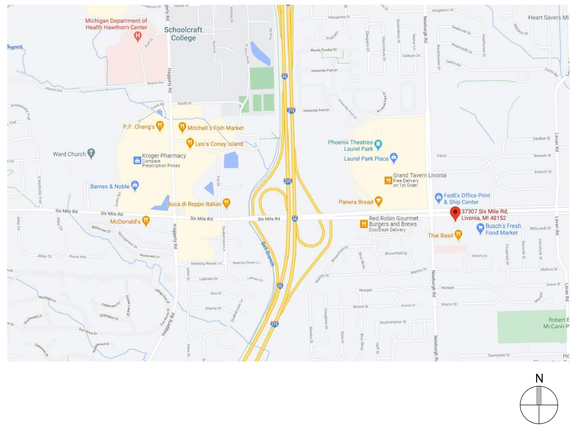

ABBREVIATIONS

ACOUS.	ACOUSTICAL
A.C.T.	ACOUSTICAL CEILING TILE
ADJ.	ADJACENT
ADJUST.	ADJUSTABLE
A.F.F.	ABOVE FINISHED FLOOR
BLK'G	METAL BLOCKING
BTWN	BETWEEN
CAB.	CABINET
℄	CENTERLINE
CL'G	CEILING
CLR.	CLEAR
C.M.	CONSTRUCTION MANAGER
COL.	COLUMN
CONSTR.	CONSTRUCTION
CONT.	CONTINUOUS
COORD.	COORDINATE
D.	DEEP
DIA.	DIAMETER
DIM.	DIMENSION
ELEC.	ELECTRICAL
EL.	ELEVATION
ELEV.	ELEVATOR
EQ.	EQUAL
EQUIP.	EQUIPMENT
F.E.C.	FIRE EXTINGUISHER CABINET
FIN.	FINISH, FINISHED
FL.	FLOOR
FR.	FRAME
FT.	FEET
GA.	GAUGE
GL.	GLASS
G.R.G.	GLASS REINFORCED GYPSUM
G.S.P.	GRID STARTING POINT
G.W.B.	GYPSUM WALL BOARD
H.	HIGH
HL	HELLYER LEWIS
HDWE	HARDWARE
H.M.	HOLLOW METAL
HOLD	HOLD DIMENSIONALLY
HORIZ.	HORIZONTAL
HVAC	HEATING, VENTILATION, AIR CONDITIONING
JT.	JOINT
MAX	MAXIMUM
M.D.F.	MEDIUM DENSITY FIBERBOARD
MECH.	MECHANICAL
MFR.	MANUFACTURER
MIN.	MINIMUM
MNT'D	MOUNTED
MTL	METAL
N.	NORTH
N.I.C.	NOT IN CONTRACT
N.T.S.	NOT TO SCALE
O.C.	ON CENTER
OPP.	OPPOSITE
P.LAM	PLASTIC LAMINATE
PL.WD	PLYWOOD
PT.	PAINT
PT'D	PAINTED
R	RADIUS
REQ'D	REQUIRED
S.C.	SOLID CORE
SIM.	SIMILAR
ST.	STAIN
ST'D	STAINED
STRUCT.	STRUCTURE
SUSP.	SUSPENDED
T.B.D.	TO BE DETERMINED
TEL	TELEPHONE
THK.	THICK
TYP.	TYPICAL
U.N.O.	UNLESS NOTED OTHERWISE
VERT.	VERTICAL
V.I.F.	VERIFY IN FIELD
W	WIDE
W/	WITH
WD.	WOOD

CONTACTS

ARCHITECT
HELLYER LEWIS, INC
211 SOUTH 12TH STREET
PHILADELPHIA, PA 19107

CONTACT:
SCOTT PEARSON
T: (215) 922-7066
F: (215) 922-3778

STRUCTURAL ENGINEER
SDI STRUCTURES
275 E LIBERTY STREET
ANN ARBOR, MI 48104

CONTACT:
PAUL DANNELS
T: (734) 213-6091

MEP ENGINEER
INTEGRATED ENGINEERING CONSULTANTS
9700 ROCKSIDE ROAD, SUITE 290
CLEVELAND, OH 44125

CONTACT:
JAKE HILSTON
T: (216) 901-6711
F: (216) 901-6712

DRAWING LIST

ARCHITECTURAL DRAWINGS

A-0.00	COVER SHEET (THIS SHEET)
A-0.01	NOTES AND TYP. MOUNTING HEIGHTS (ANSI)
A-0.02	LIFE SAFETY PLAN
C-1.01	EXISTING SITE PLAN
D-1.01	DEMOLITION PLAN
D-2.01	DEMOLITION REFLECTED CEILING PLAN
A-1.01	ARCHITECTURAL PLAN
A-1.02	EXTERIOR ELEVATIONS
A-1.03	EXTERIOR ELEVATIONS
A-1.04	EXTERIOR DETAILS
A-1.05	EXTERIOR WALL SECTION AND DETAILS
A-2.00	REFLECTED CEILING LIGHTING SCHEDULE
A-2.01	REFLECTED CEILING PLAN
A-3.01	POWER, VOICE & DATA PLAN
A-3.02	SECURITY PLAN
A-3.03	EQUIPMENT PLAN
A-3.04	EQUIPMENT SCHEDULE
A-4.00	FINISH SCHEDULE
A-4.01	FINISH PLAN
A-4.02	BRANDING PLAN
A-5.00	DOOR & HARDWARE SCHEDULES
A-5.01	DOOR & STOREFRONT DETAILS
A-6.00	INTERIOR ELEVATIONS
A-6.01	INTERIOR ELEVATIONS
A-6.02	INTERIOR ELEVATIONS
A-6.03	INTERIOR ELEVATIONS
A-6.04	INTERIOR ELEVATIONS
A-6.05	INTERIOR ELEVATIONS
A-6.06	INTERIOR ELEVATIONS
A-7.00	PARTITION TYPES & DETAILS
A-7.01	MILLWORK DETAILS
A-7.02	TRASH UNIT DETAILS
A-7.03	CHECK-IN DESK DETAILS AND AXONOMETRICS
A-7.04	CHECK-IN DESK DETAILS
A-7.05	REAR TELLER MILLWORK DETAILS
A-7.06	TELLER BAR DETAILS AND AXONOMETRICS
A-7.07	TELLER BAR DETAILS
A-7.08	TELLER BAR DETAILS
A-7.09	TELLER PORTAL DETAILS
A-7.10	TELLER PORTAL DETAILS
A-7.11	TELLER PORTAL DETAILS
A-8.00	CONSTRUCTION NOTES - INTERIOR WORK
A-8.01	CONSTRUCTION NOTES - INTERIOR WORK
A-8.02	CONSTRUCTION NOTES - EXTERIOR WORK
A-8.03	CONSTRUCTION NOTES - EXTERIOR WORK
A-8.04	CONSTRUCTION NOTES - EXTERIOR WORK
A-8.05	CONSTRUCTION NOTES - EXTERIOR WORK

FURNITURE DRAWINGS (FOR REFERENCE ONLY)

FD-1.01	FURNITURE DEMOLITION PLAN
F-1.01	FURNITURE PLAN

ENGINEERING DRAWINGS

M-0.01	MECHANICAL HVAC SCHEDULES, LEGENDS, & NOTES
M-1.01	MECHANICAL HVAC DEMOLITON PLAN
M-2.01	MECHANICAL HVAC PLAN
M-3.01	MECHANICAL HVAC SPECIFICATIONS
E-0.01	ELECTRICAL SCHEDULES, LEGENDS, & NOTES
E-1.01	ELECTRICAL POWER DEMOLITION PLAN
E-2.01	ELECTRICAL LIGHTING DEMOLITION PLAN
E-3.01	ELECTRICAL POWER PLANS
E-4.01	ELECTRICAL LIGHTING PLAN
E-5.00	ELECTRICAL SPECIFICATIONS
P-0.01	PLUMBING SCHEDULES, LEGENDS, & NOTES
P-1.01	PLUMBING PLAN

STRUCTURAL DRAWING

S-1	STRUCTURAL DETAILS

SELECTED DRAWINGS REISSUED TO CITY OF LIVONIA: AUGUST 13, 2021
REVISION #5: MAY 7, 2021
REVISION #4: APRIL 22, 2021
REVISION #3: APRIL 6, 2021
REVISION #2: FEBRUARY 24, 2021
REVISION #1: JANUARY 29, 2021
ISSUED FOR PERMITS: JANUARY 22, 2021
ISSUED FOR BID: JANUARY 8, 2021

HELLYER LEWIS, INC.

211 South 12th Street, Philadelphia, PA 19107 215 . 922 . 7066

LIFE SAFETY SYMBOLS

ROOM — ROOM NAME
ROOM — ROOM NAME
101 — ROOM NUMBER

COMMON PATH OF EGRESS TRAVEL

EGRESS ROUTE

EXIT DISTANCE

FEC — FIRE EXTINGUISHER

LED ILLUMINATED EXIT SIGN. DIRECTIONAL ARROWS AS INDICATED.

PR — PARABIT READER

APPLICABLE BUILDING CODES

A.	BUILDING CODE:	2015 MICHIGAN STATE BUILDING CODE
B.	MECHANICAL CODE:	2015 MICHIGAN STATE MECHANICAL CODE
C.	PLUMBING CODE:	2015 MICHIGAN STATE PLUMBING CODE
D.	FIRE CODE:	2018 INTERNATIONAL FIRE CODE
E.	ELECTRICAL CODE:	2017 NATIONAL ELECTRICAL CODE
F.	ENERGY CONSERVATION CODE:	2015 MICHIGAN STATE ENERGY CODE
G.	ACCESSIBILITY:	ICC/ANSI A117.1 2009 ACCESSIBLE AND USABLE BUILDINGS AND FACILITIES 2010 ADA STANDARDS FOR ACCESSIBLE DESIGN

CODE DATA

1. USE GROUP: B NON-SPRINKLERED
2. CONSTRUCTION CLASSIFICATION: IIA (NON-SPRINKLERED)
3. AREA LIMITATIONS
   A. AREA PER FLOOR: EXISTING
   B. TOTAL TENANT AREA FIRST FLOOR: 3,754 USF
4. OCCUPANCY LOAD:
   ALLOWABLE PER CODE
   TENANT AREA: 3,754 USF / 100 GROSS = 37 PEOPLE (BUSINESS)
5. EGRESS WIDTH PER OCCUPANT:
   DOORS: 32" MIN. REQUIRED BETWEEN THE FACE OF THE DOOR AND THE STOP WITH THE DOOR OPEN 90 DEGREES, 33"CLEAR AT ALL PROPOSED DOORS (MIN.)
   RAMPS: 44" MIN.
   CORRIDORS: 44" MIN. PROVIDED
   STAIRWAYS: @ .2"/OCC
   STAIRS: 44" MIN. REQUIRED
6. MAXIMUM LENGTH OF EGRESS TRAVEL: 200FT
7. MAXIMUM COMMON PATH OF TRAVEL: 75FT
8. MAXIMUM DEAD END CORRIDOR: 20FT
9. NUMBER OF EXITS REQUIRED: 2
10. NUMBER OF EXITS PROVIDED: 2
11. INTERIOR WALL AND CEILING FINISH REQUIREMENTS (NON-SPRINKLERED B OCCUPANCY):
    A. EXIT ENCLOSURE AND EXIT PASSAGEWAYS - A
    B. CORRIDORS - B
    C. ROOMS & ENCLOSED SPACES - C

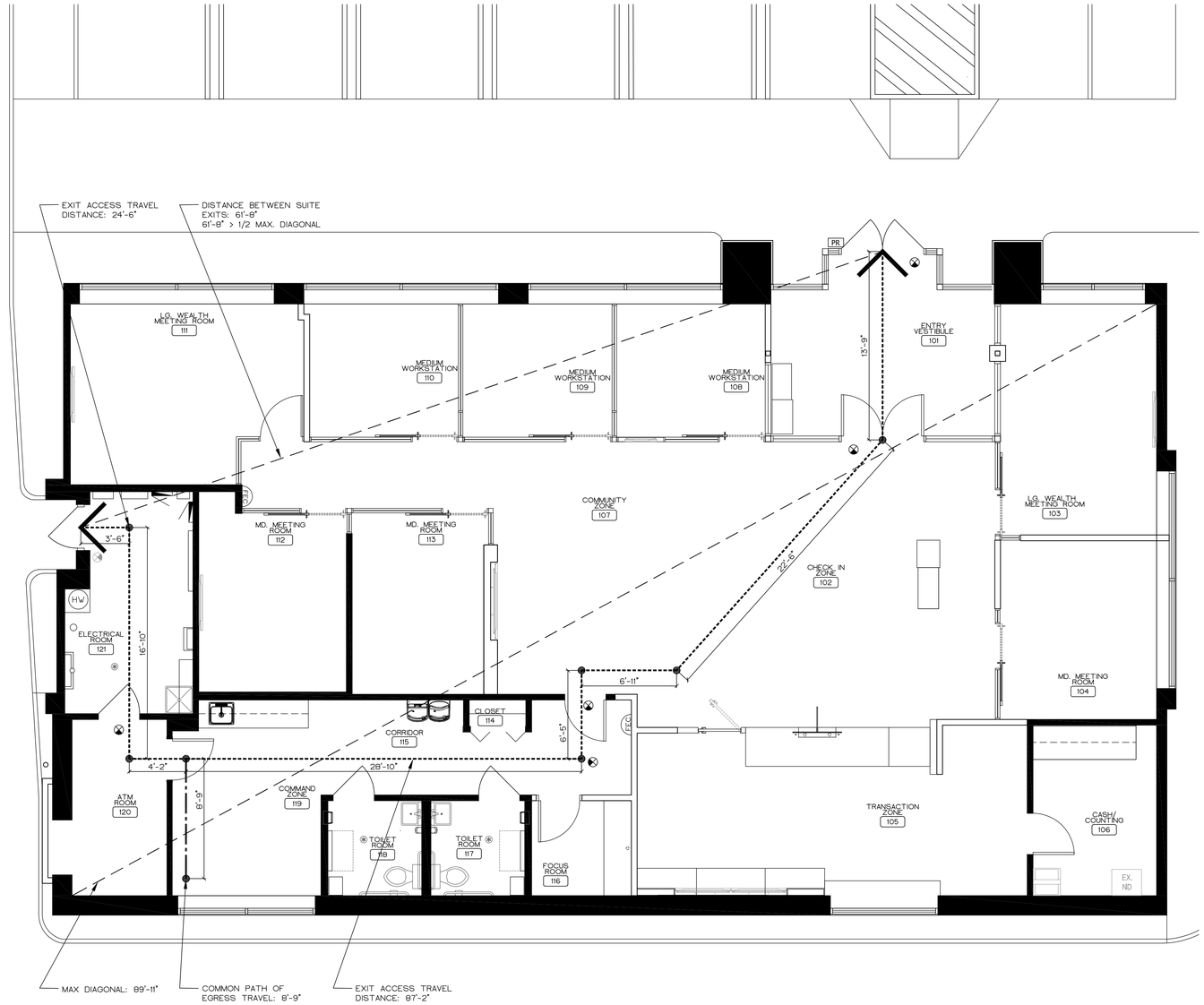

1 / A-0.02 LIFE SAFETY PLAN
SCALE: 1/4" = 1'-0"

PROJECT NORTH

HELLYER LEWIS Inc.
ARCHITECTURE
INTERIOR DESIGN

211 South 12th St.
Phila., PA 19107
215.922.7066

THE GENERAL CONTRACTOR IS RESPONSIBLE TO VERIFY ALL DIMENSIONS ON SITE AND CONFIRM SUCH DIMENSIONS AGAINST ACTUAL SITE CONDITIONS. THE GENERAL CONTRACTOR SHALL COORDINATE ALL WORK AND RELATED TRADES, AND SHALL NOTIFY THE ARCHITECT OF ANY INTERFERENCE OF MECHANICAL, ELECTRICAL, OR PLUMBING WORK WITH THE ARCHITECTURAL WORK AND OF ANY CONFLICTS OR DISCREPANCIES IN DIMENSIONS AGAINST ON SITE CONDITIONS PRIOR TO PROCEEDING WITH THE WORK OR PROCUREMENT OF MATERIALS.

Project:

Citizens

Newburgh Branch
37307 Six Mile Road
Livonia, MI 48154

Project No: 072.02

Drawn by:	JP
Checked by:	SP/KS
Approved by:	KMB

Client Approval:	Date:
Issued for DD Review	12/11/20

Issued for Bid:	01/08/21
Issued for Permit:	01/22/21

No.	Date	Revision
1	08/13/21	REISSUED TO CITY OF LIVONIA

Scale: 1/4" = 1'-0"

Drawing:
Life Safety Plan

No. A-0.02

PART OF THE NORTHWEST 1/4 SECTION 17, T.1S., R.9E., DESCRIBED AS COMMENCING AT THE NORTHWEST CORNER OF SECTION 17 T.1S., R.9E., THENCE S 89D 35M 20S E, 374.29 FEET; THENCE S 00D 07M 12S E 90.00 FT TO A POINT IN THE SOUTH ROW OF SIX MILE ROAD (ROW VARIES) SAID POINT ALSO BEING THE POINT OF BEGINNING; THENCE S 89D 35M 20S E, 134.86 FEET; THENCE N 86D 54M 27S E, 25.17 FEET; THENCE S 00D 07M 12S E, 173.54 FEET; THENCE N 89D 35M 20S W, 160.00 FEET; THENCE N 00D 07M 12S W, 172.00 FT TO THE POINT OF BEGINNING. CONTAINING 27,537 SF OR 0.63 ACRES. SUBJECT TO EASEMENTS AND RESTRICTIONS OF RECORD:

37307 SIX MILE LIVONIA, MI 48152 (PROPERTY ADDRESS)
PARCEL NUMBER: 066 99 0005 013
PROPERTY OWNER: CHARTER ONE BANK (NOW CITIZENS BANK)

SUMMARY INFORMATION
COMMERCIAL/INDUSTRIAL BUILDING SUMMARY
YR BUILT: 1998
TOTAL SQ.FT.: 3,753
OF BUILDINGS: 1

LOT(S) FRONTAGE DEPTH
TOTAL FRONTAGE: 159.00 FT AVERAGE DEPTH: 172.60 FT
LOT 1 159.00 FT 172.60 FT
EASEMENTS AND RESTRICTIONS OF RECORD 0.63 AC

EXISTING PARKING LOT IS 3" ASPHALT (M.D.O.T. #100), IN TWO 1-1/2" LIFTS, ON 6" AGGREGATE/GRAVEL BASE (21AA), WITH BOND COAT BETWEEN. EXISTING SIDEWALKS AND RAMPS ARE PR. 4" CONCRETE. EXISTING CURBS AND GUTTERS ARE CONCRETE.

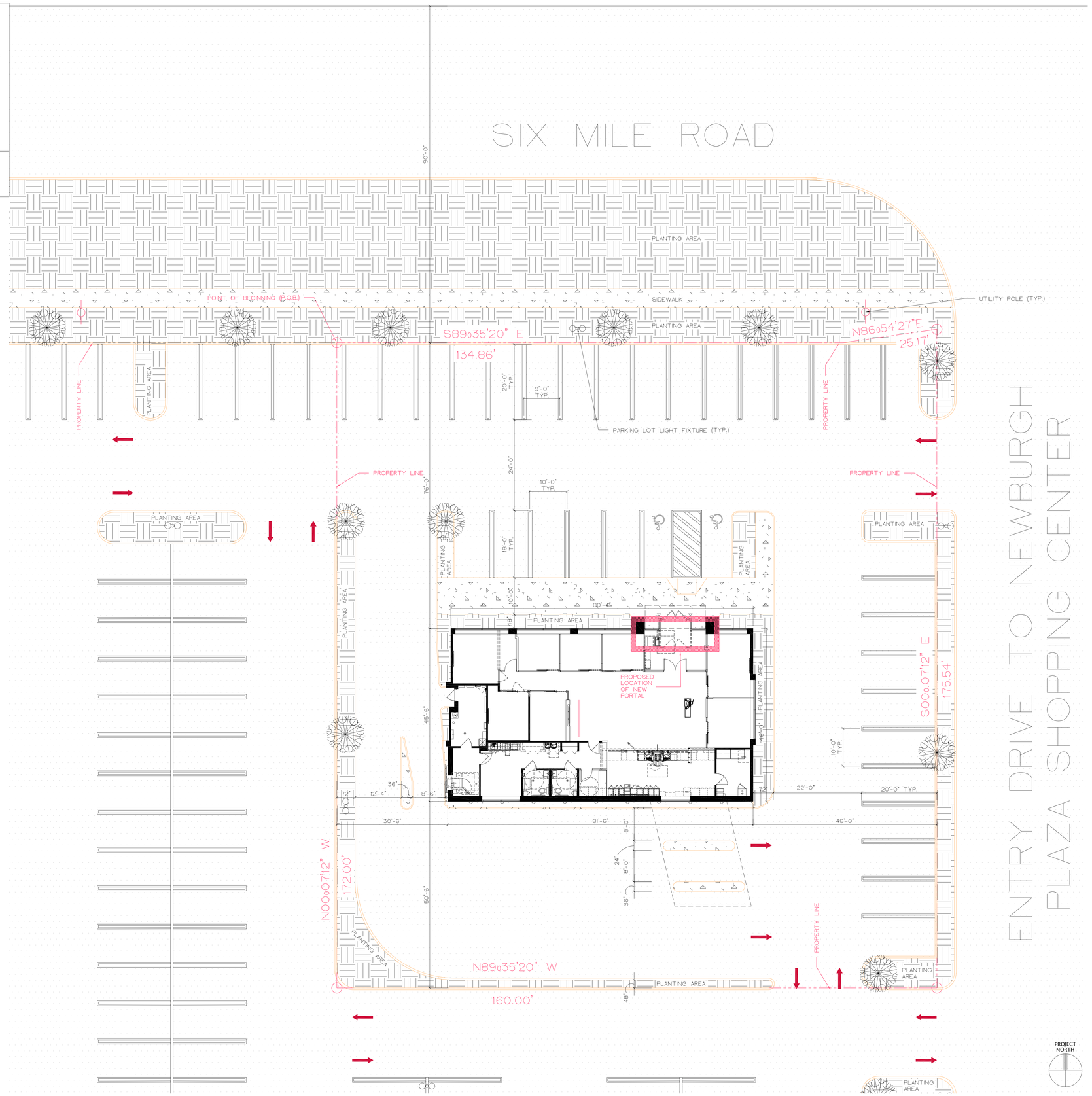

HELLYER LEWIS Inc.
ARCHITECTURE
INTERIOR DESIGN

211 South 12th St.
Phila., PA 19107
215.922.7066

THE GENERAL CONTRACTOR IS RESPONSIBLE TO VERIFY ALL DIMENSIONS ON SITE AND CONFIRM SUCH DIMENSIONS AGAINST ACTUAL SITE CONDITIONS. THE GENERAL CONTRACTOR SHALL COORDINATE ALL WORK AND RELATED TRADES, AND SHALL NOTIFY THE ARCHITECT OF ANY INTERFERENCE OF MECHANICAL, ELECTRICAL, OR PLUMBING WORK WITH THE ARCHITECTURAL WORK AND OF ANY CONFLICTS OR DISCREPANCIES IN DIMENSIONS AGAINST ON SITE CONDITIONS PRIOR TO PROCEEDING WITH THE WORK OR PROCUREMENT OF MATERIALS.

Project:

Citizens

Newburgh Branch
37307 Six Mile Road
Livonia, MI 48154

Project No: 072.02

Drawn by:	JP
Checked by:	SP/KS
Approved by:	KMB

Client Approval:	Date:
Issued for DD Review	12/11/20
Issued for Bid:	01/08/21
Issued for Permit:	01/22/21

No.	Date	Revision
1	08/13/21	REISSUED TO CITY OF LIVONIA

Scale: 3/32" = 1'-0"

Drawing:
Existing Site Plan

No. C-1.01

ARCHITECTURAL SYMBOLS

ROOM — ROOM NAME
ROOM — ROOM NAME
101 — ROOM NUMBER

XXXXX — INDICATES DOOR NUMBER, SEE SHEET A-5.00 FOR TYPES & DOOR AND HARDWARE SCHEDULES

1 / A-6.00 / SIM. — DETAIL NUMBER; SHEET NUMBER

1 / 4 / A-X.XX / 2 / 3 — DETAIL NUMBERS; SHEET NUMBER

FEC — NEW OR RELOCATED SEMI-RECESSED FIRE EXTINGUISHER & CABINET TO MATCH EXISTING. DOUBLE UP STUDS FOR REQUIRED CABINET DEPTH AS REQUIRED. SEE SHEET A-0.01 FOR MOUNTING HEIGHTS.

------- INDICATES BLOCKING FOR MILLWORK UNITS

PARTITION TYPES

EXISTING PARTITION TO REMAIN

A — PARTITION TYPE #A SEE DETAIL 1/A-7.00

B — PARTITION TYPE #B SEE DETAIL 2/A-7.00

C — PARTITION TYPE #C SEE DETAIL 3/A-7.00

D — PARTITION TYPE #D SEE DETAIL 4/A-7.00

H — PARTITION TYPE #H SEE DETAIL 5/A-7.00

I — PARTITION TYPE #I SEE DETAIL 6/A-7.00

J — PARTITION TYPE #J SEE DETAIL 10/A-7.00

ARCHITECTURAL KEY NOTES

01 NEW EXTERIOR PARTITION AT ATM ENCLOSURE TO BE CONSTRUCTED 3" FROM FRONT FACE OF CURB.

02 WHERE NEW PARTITIONS TERMINATE AT EXISTING WINDOW GLASS, G.C. TO PROVIDE NEW 'WINDOW-MATE' ELEMENTS. SEE DETAIL 9/A-7.00 FOR MORE INFORMATION.

03 EXISTING MILLWORK TO REMAIN.

04 EXISTING PLUMBING TO REMAIN.

05 EXISTING DRIVE-UP LANES TO REMAIN.

06 EXISTING FLOOR DRAINS TO REMAIN.

07 NEW FLUSH BOLT BOLLARD TO BE ANCHORED TO THE EXISTING CONCRETE CURB. BOLLARD TO MATCH EXISTING IN HEIGHT, DIAMETER AND FINISH.

08 G.C. TO PROVIDE AND INSTALL STEEL TUBE AND PLATE AT DIRTT WORKSTATION DEMOUNTABLE PARTITION. REFER TO DIRTT SHOP DRAWINGS FOR ADDITIONAL INFORMATION.

09 NEW 4"x4" STRUCTURAL COLUMNS TO BE INSTALLED AT LOCATIONS INDICATED. REFER TO STRUCTURAL DRAWINGS FOR MORE INFORMATION.

ARCHITECTURAL GENERAL NOTES

1. ALL DIMENSIONS ARE FROM FINISH FACE OF PARTITION TO FINISH FACE OF PARTITION, UNLESS NOTED OTHERWISE.
2. GENERAL CONTRACTOR MUST COORDINATE AMONG ALL TRADES TO ENSURE PROPER SEQUENCE AND EXECUTION OF WORK.
3. IN THE EVENT OF ANY DISCREPANCIES IN THE DOCUMENTS, OR IF PROBLEMS ARE ENCOUNTERED DURING CONSTRUCTION, THE GENERAL CONTRACTOR MUST NOTIFY ARCHITECT BEFORE PROCEEDING WITH THE WORK IN QUESTION.
4. DO NOT SCALE DRAWINGS. IF DIMENSIONS ARE IN QUESTION, THE GENERAL CONTRACTOR MUST OBTAIN CLARIFICATION FROM THE ARCHITECT BEFORE CONTINUING WITH CONSTRUCTION.
5. WHERE "MIN." OR "V.I.F." IS INDICATED ON PLANS, GENERAL CONTRACTOR SHALL FIELD VERIFY THAT THE DIMENSION IS OBTAINABLE. IF NOT, THE GENERAL CONTRACTOR SHALL BE RESPONSIBLE FOR OBTAINING FURTHER DIRECTION FROM THE ARCHITECT.
6. ALL DRYWALL ABUTTING OTHER MATERIALS SHALL BE FINISHED WITH METAL EDGES.
7. PARTITION TYPES ARE INDICATED ON PLAN, AND IN PARTITION DETAILS. PROVIDE ADDITIONAL KICK-BRACING TO TYPICAL PARTITION TYPES WHERE WALL-MOUNTED ELEMENTS OR CLERESTORIES OCCUR ALONG PARTITIONS. GENERAL CONTRACTOR IS TO COORDINATE, PROVIDE AND INSTALL FOR PARTITIONS KICK-BRACING, DOUBLE STUDS, FIRE-RETARDANT WOODEN BLOCKING, ETC. AS REQUIRED TO SECURELY SUPPORT WALL-MOUNTED ELEMENTS. THESE ELEMENTS MAY INCLUDE, BUT ARE NOT LIMITED TO: EQUIPMENT; WORK SURFACES; COUNTERS; BRACKETS; DISPLAYS; WALL-MOUNTED FURNITURE; SHELVING; CASEWORK; CABINETS; MILLWORK; COAT HOOKS; FIRE EXTINGUISHER CABINETS.
8. THE HINGE SIDE OF THE DOOR IS TO BE 6" FROM THE INSIDE CORNER OF THE ROOM INTO WHICH IT LEADS, UNLESS NOTED OTHERWISE.
9. GENERAL CONTRACTOR MUST REPAIR AND RETURN TO A "LIKE-NEW" CONDITION ANY AND ALL DAMAGE OCCURRING FROM DEMOLITION AND/OR CONSTRUCTION.
10. G.C. IS TO REVIEW THE SECURITY VENDOR'S SCOPE OF WORK, AND TO COORDINATE THE SCHEDULING OF SUCH WORK, SO THE G.C. WOULD NOT HAVE ADDITIONAL DEMOLITION OR PATCHING WORK, AS A RESULT.
11. G.C. TO SUBMIT TO THE ARCHITECT FOR REVIEW ALL PRODUCT SAMPLES, MANUFACTURER'S DATA AND SHOP DRAWINGS LISTED IN THESE DRAWINGS. THESE INCLUDE, BUT ARE NOT LIMITED TO, SAMPLES OF ALL FINISHES LISTED IN THE FINISH SCHEDULE, MANUFACTURER'S DATA ON LIGHT FIXTURES SPECIFIED ON REFLECTED CEILING PLAN, SHOP DRAWINGS FOR MILLWORK, AND SUBMITTALS FOR ALL DOORS, FRAMES AND HARDWARE SPECIFIED ON DWG. A-5.00.
12. ALL NEW DOORS SHALL ALLOW 12" MIN. CLEARANCE ON PUSH SIDE OF DOOR AND 18" MIN. CLEARANCE ON PULL SIDE OF DOORS, UNLESS OTHERWISE NOTED.
13. GENERAL CONTRACTOR IS TO PROVIDE FIRE EXTINGUISHERS AND CABINETS, AS REQUIRED, IN COMPLIANCE WITH LOCAL CODES TO MATCH EXISTING IN MANUFACTURER, STYLE AND FINISH. GENERAL CONTRACTOR IS TO COORDINATE FINAL LOCATIONS, DISTRIBUTION AND QUANTITIES WITH ARCHITECT.
14. PROVIDE DOUBLE STUDS AT ALL DOOR OPENINGS.
15. PROVIDE NECESSARY FRAMING AS REQUIRED AROUND HVAC AND PLUMBING EQUIPMENT OPENINGS IN WALLS AND CEILINGS.
16. PATCH/REPAIR EXISTING SURFACES WHICH ARE DAMAGED WITH SKIMCOAT. IF REQUIRED, FURR/OUT WALL AND ADD 5/8" GYPSUM BOARD OR LAMINATE OVER EXISTING SURFACES WITH 5/8" GYPSUM BOARD.
17. WHERE ORIGINAL CEILING HEIGHT IS LOWER THAN NEW CEILING HEIGHT, GC TO EXTEND PARTITIONS AS REQUIRED TO MEET NEW CEILING HEIGHT AND/OR AS REQUIRED TO PROVIDE PROPER PARTITION TYPE.
18. GC TO LAYOUT PARTITIONS FOR REVIEW BY ARCHITECT/ARCHITECT'S FIELD REPRESENTATIVE PRIOR TO COMMENCING CONSTRUCTION OF PARTITIONS. GC TO PROVIDE TWO-WEEKS NOTICE TO ENSURE WORK IS NOT DELAYED.
19. GC SHALL VERIFY EXISTING DOOR HARDWARE TO REMAIN IS FUNCTIONING PROPERLY. REPAIR OR REPLACE DAMAGED HARDWARE FOR SMOOTH OPERATION AND ADA COMPLIANCE. REFER TO DWG. A-5.00 FOR MORE INFORMATION.
20. PROVIDE WATER LINE AT THE COMMAND ZONE AS SPECIFIED BY MFG. FOR COFFEE MAKERS, ICE MACHINES, WATER FILTERS, FREEZERS, ETC. REFER TO DWG. A-3.03 EQUIPMENT PLAN AND SCHEDULE AS WELL AS PLUMBING PLANS FOR ADDITIONAL INFORMATION.
21. REPAIR ALL EXISTING FLOORS WHERE REQUIRED. PROPERLY LEVEL AND MAKE SMOOTH SURFACE AND PREPARE SUBSTRATE TO RECEIVE NEW FLOOR FINISH.
22. STUD LOCATIONS SHALL BE COORDINATED WITH MOUNTING DIMENSIONS AND ORIENTATION OF ALL DEVICES AS DESCRIBED ON TYPICAL MOUNTING HEIGHTS LISTED, A-2.01 AND A-3.01. PROVIDE CROSS STUD AS REQUIRED TO ASSURE PROPER ALIGNMENT.
23. CROSS BRACE ALL DOOR FRAMES/HEADERS AND SECURE TO STRUCTURE ABOVE.
24. ALL EXISTING TO REMAIN ACCESS PANELS, SWITCHES, POWER AND TELEPHONE OUTLETS SHALL BE REPLACED WITH NEW AND BROUGHT OUT TO NEW FINISHED SURFACE. PROVIDE NEW FINISH MATERIAL OVER ACCESS PANEL TO MATCH ADJACENT FINISH.
25. WHERE EXISTING ACCESS PANELS CONFLICT WITH CONSTRUCTION, RELOCATE PANELS TO ALIGN WITH AND FIT WITHIN NEW CONSTRUCTION.
26. VERIFY WITH ARCHITECT IF ANY ADJUSTMENTS ARE REQUIRED TO MAINTAIN "HOLD-TO" DIMENSIONS REGARDING THE "DIRTT" WALL SYSTEM.
27. WHEN SELF LEVELING FLOORS, SLOPE SHOULD NOT EXCEED 3/16" PER FOOT.

ALTERNATES

1 PROVIDE ADD/ALTERNATE PRICING TO REPLACE EXISTING TO REMAIN BACK-OF-HOUSE DOORS WITH NEW DOORS. SEE DOOR AND HARDWARE SCHEDULES ON SHEET A-5.00 FOR MORE INFORMATION,

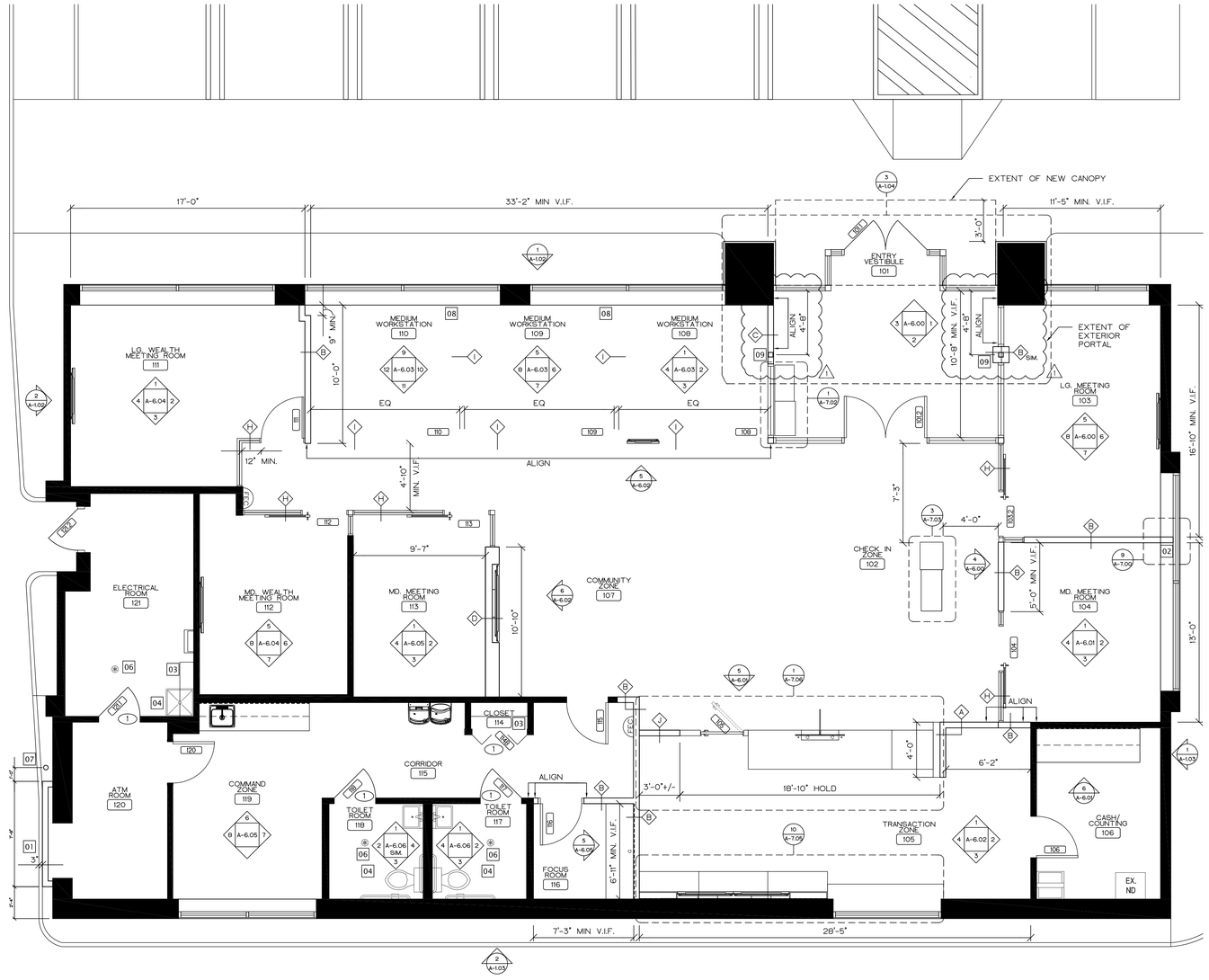

1 / A-1.01 ARCHITECTURAL PLAN
SCALE: 1/4" = 1'-0"

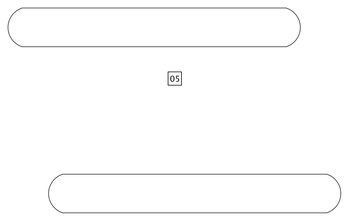

PROJECT NORTH

HELLYER LEWIS Inc.
ARCHITECTURE
INTERIOR DESIGN

211 South 12th St.
Phila., PA 19107
215.922.7066

THE GENERAL CONTRACTOR IS RESPONSIBLE TO VERIFY ALL DIMENSIONS ON SITE AND CONFIRM SUCH DIMENSIONS AGAINST ACTUAL SITE CONDITIONS. THE GENERAL CONTRACTOR SHALL COORDINATE ALL WORK AND RELATED TRADES, AND SHALL NOTIFY THE ARCHITECT OF ANY INTERFERENCE OF MECHANICAL, ELECTRICAL, OR PLUMBING WORK WITH THE ARCHITECTURAL WORK AND OF ANY CONFLICTS OR DISCREPANCIES IN DIMENSIONS AGAINST ON SITE CONDITIONS PRIOR TO PROCEEDING WITH THE WORK OR PROCUREMENT OF MATERIALS.

Project:

Citizens

Newburgh Branch
37307 Six Mile Road
Livonia, MI 48154

Project No: 072.02

Drawn by:	JP
Checked by:	SP/KS
Approved by:	KMB

Client Approval:	Date:
Issued for DD Review	12/11/20
Issued for Bid:	01/08/21
Issued for Permit:	01/22/21

No.	Date	Revision
1	05/12/21	RESUBMITTED TO THE LIVONIA BUILDING DEPT.
2	08/13/21	REISSUED TO CITY OF LIVONIA

Scale: 1/4" = 1'-0"

Drawing:
Architectural Plan

No. A-1.01

EXTERIOR FINISH SCHEDULE

NO.	DESCRIPTION	MANUFACTURER	MODEL NO./COLOR/FINISH	REMARKS
PAINT SUFFIX LEGEND: FL = FLAT, SG = SEMI-GLOSS, GL = GLOSS, LA = LACQUER, ST = WOLF GORDON, SCRUBTOUGH				
PAINT				
EP-2 SG	EXTERIOR PAINT	BENJAMIN MOORE	COLOR: LIGHT PEWTER #1464 FINISH: SEMI-GLOSS (632) PRODUCT TYPE: BENJAMIN MOORE AURA EXTERIOR PAINT	•LOCATION: EXTERIOR, FACADE
EP-7	EXTERIOR PAINT	SHERWIN WILLIAMS	COLOR: GREENBELT # SW 6927 FINISH: TBD, BASED ON SITE CONDITIONS PRODUCT TYPE: BENJAMIN MOORE AURA EXTERIOR PAINT	•LOCATION: EXTERIOR, ACCENT
FACADE TREATMENT				
CL-4	COMPOSITE WOOD SIDING	NEWTECHWOOD	MODEL:"ULTRASHIELD" COLOR: BRAZILIAN IPE DIMENSION: 5.5" X 16'-0"	•LOCATION: EXTERIOR, FACADE

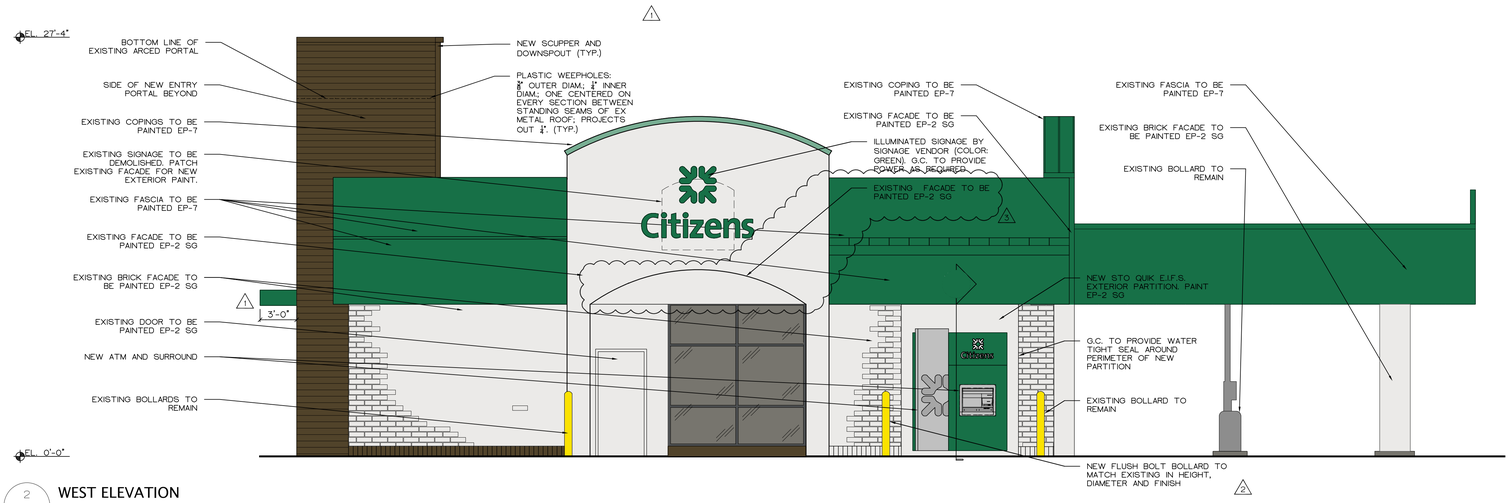

2 A-1.02 **WEST ELEVATION**
SCALE: 1/4" = 1'-0"

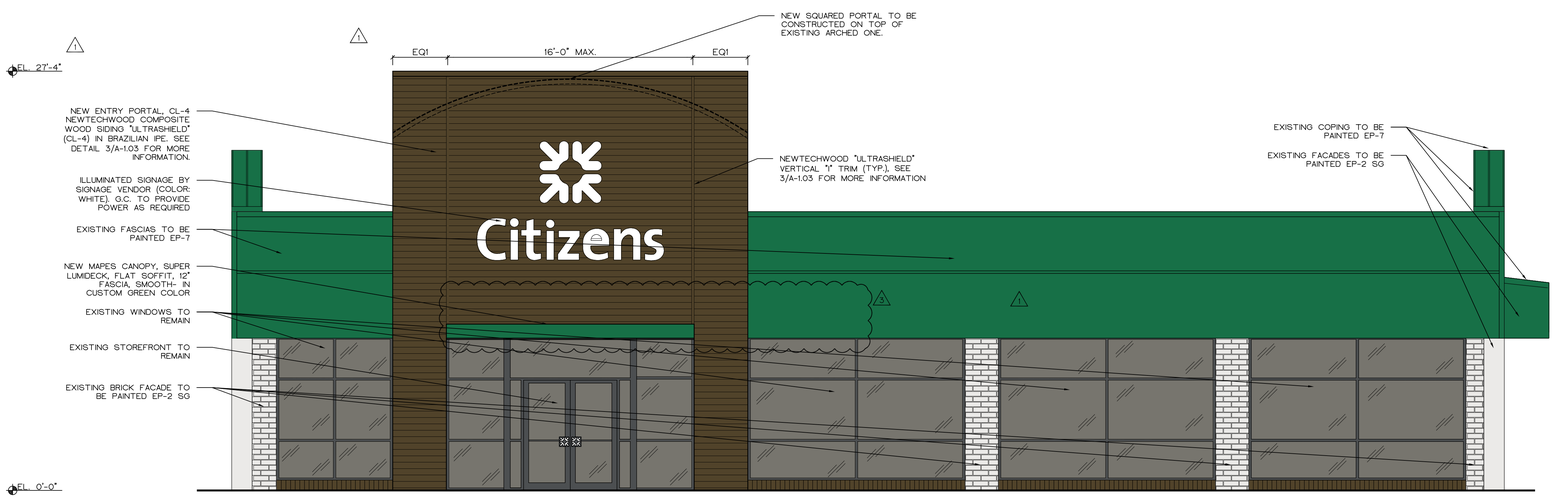

1 A-1.02 **NORTH ELEVATION**
SCALE: 1/4" = 1'-0"

HELLYER LEWIS Inc.
ARCHITECTURE
INTERIOR DESIGN

211 South 12th St.
Phila., PA 19107
215.922.7066

THE GENERAL CONTRACTOR IS RESPONSIBLE TO VERIFY ALL DIMENSIONS ON SITE AND CONFIRM SUCH DIMENSIONS AGAINST ACTUAL SITE CONDITIONS. THE GENERAL CONTRACTOR SHALL COORDINATE ALL WORK AND RELATED TRADES, AND SHALL NOTIFY THE ARCHITECT OF ANY INTERFERENCE OF MECHANICAL, ELECTRICAL, OR PLUMBING WORK WITH THE ARCHITECTURAL WORK AND OF ANY CONFLICTS OR DISCREPANCIES IN DIMENSIONS AGAINST ON SITE CONDITIONS PRIOR TO PROCEEDING WITH THE WORK OR PROCUREMENT OF MATERIALS.

Project:

Citizens

Newburgh Branch
37307 Six Mile Road
Livonia, MI 48154

Project No: 072.02

Drawn by:	JP
Checked by:	SP/KS
Approved by:	KMB

Client Approval:	Date:
Issued for DD Review	12/11/20

Issued for Bid:	01/08/21
Issued for Permit:	01/22/21

No.	Date	Revision
1	01/29/21	Revision #1
2	02/24/21	Revision #2
3	05/07/21	Revision #5
4	08/13/21	REISSUED TO CITY OF LIVONIA

Scale: 1/4" = 1'-0"

Drawing:
Exterior Elevations

No. A-1.02

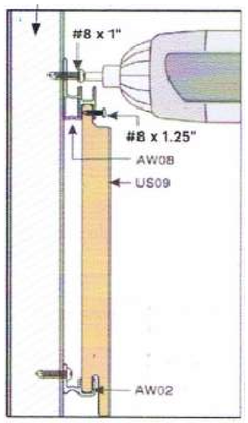

AW-08 CLIP WITH LOCKING

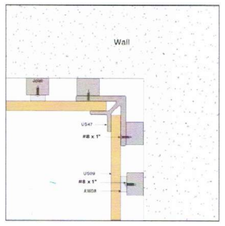

US47 INSIDE CORNER TRIM

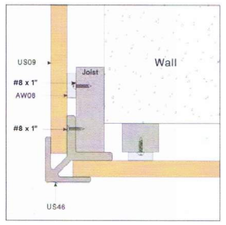

US46 OUTSIDE CORNER TRIM

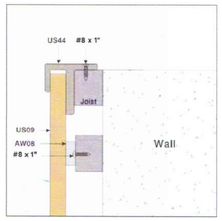

US44 "F" TRIM

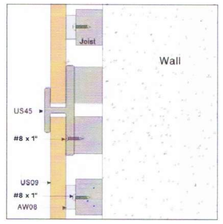

US45 "I" TRIM

3 / A-1.03 NEWTECHWOOD "ULTRASHIELD" TRIM DETAILS

SCALE: N.T.S.

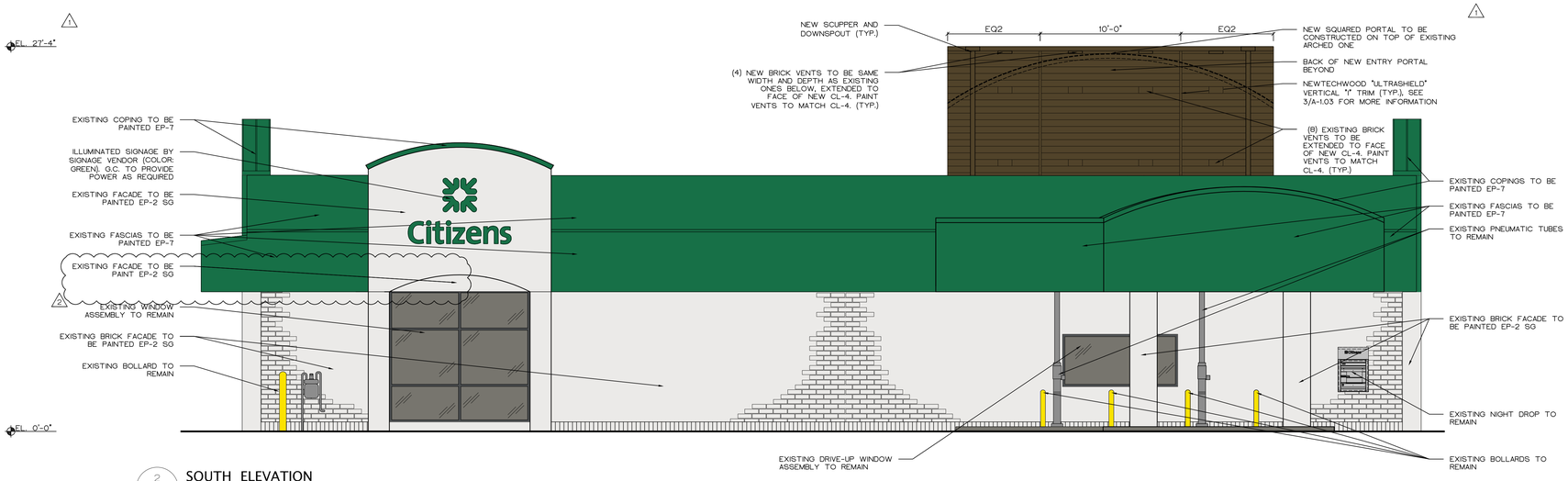

2 / A-1.03 SOUTH ELEVATION

SCALE: 1/4" = 1'-0"

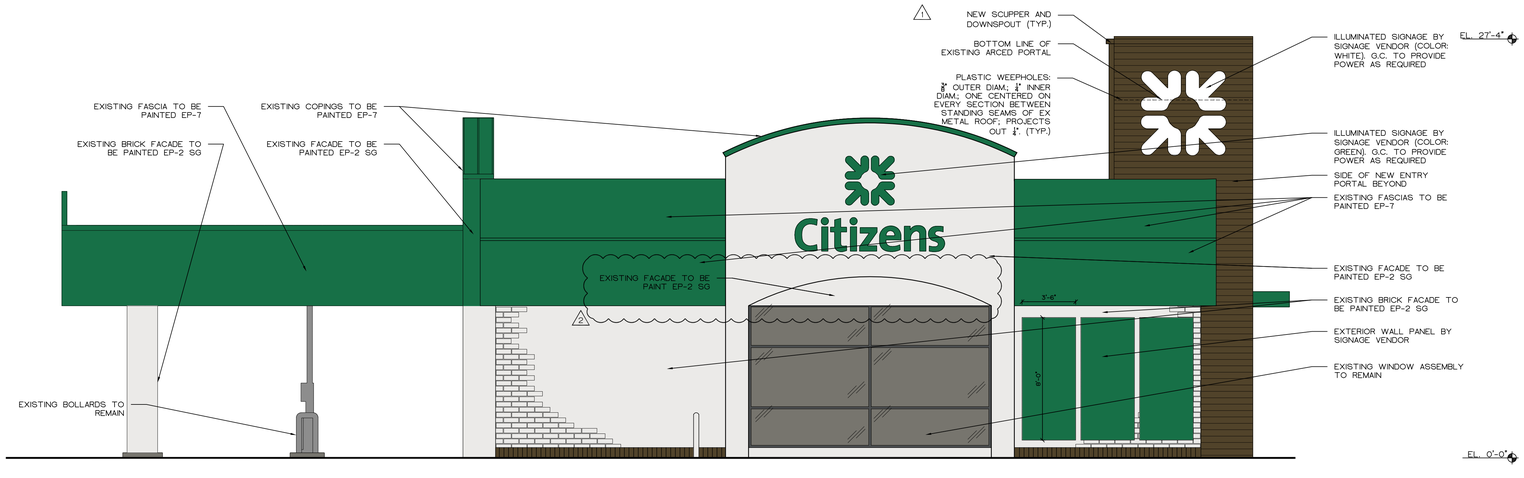

1 / A-1.03 EAST ELEVATION

SCALE: 1/4" = 1'-0"

REFER TO A-1.02 FOR EXTERIOR FINISH SCHEDULE

HELLYER LEWIS Inc.

ARCHITECTURE
INTERIOR DESIGN

211 South 12th St.
Phila., PA 19107
215.922.7066

THE GENERAL CONTRACTOR IS RESPONSIBLE TO VERIFY ALL DIMENSIONS ON SITE AND CONFIRM SUCH DIMENSIONS AGAINST ACTUAL SITE CONDITIONS. THE GENERAL CONTRACTOR SHALL COORDINATE ALL WORK AND RELATED TRADES, AND SHALL NOTIFY THE ARCHITECT OF ANY INTERFERENCE OF MECHANICAL, ELECTRICAL, OR PLUMBING WORK WITH THE ARCHITECTURAL WORK AND OF ANY CONFLICTS OR DISCREPANCIES IN DIMENSIONS AGAINST ON SITE CONDITIONS PRIOR TO PROCEEDING WITH THE WORK OR PROCUREMENT OF MATERIALS.

Project:

Citizens

Newburgh Branch
37307 Six Mile Road
Livonia, MI 48154

Project No: 072.02

Drawn by:	JP
Checked by:	SP/KS
Approved by:	KMB

Client Approval:	Date:
Issued for DD Review	12/11/20
Issued for Bid:	01/08/21
Issued for Permit:	01/22/21

No.	Date	Revision
1	01/29/21	Revision #1
2	05/07/21	Revision #5
3	08/13/21	REISSUED TO CITY OF LIVONIA

Scale: 1/4" = 1'-0"

Drawing:
Exterior Elevations

No. A-1.03

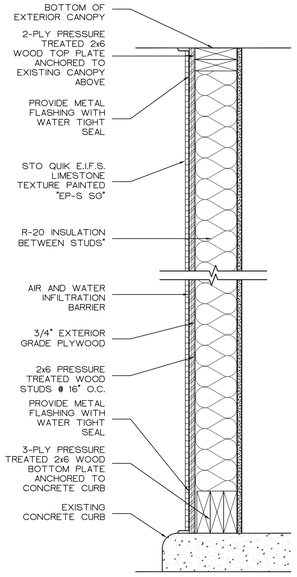

4 / A-1.04 SECTION AT EXTERIOR E.F.I.S. PARTITION

SCALE: 1/2" = 1'-0"

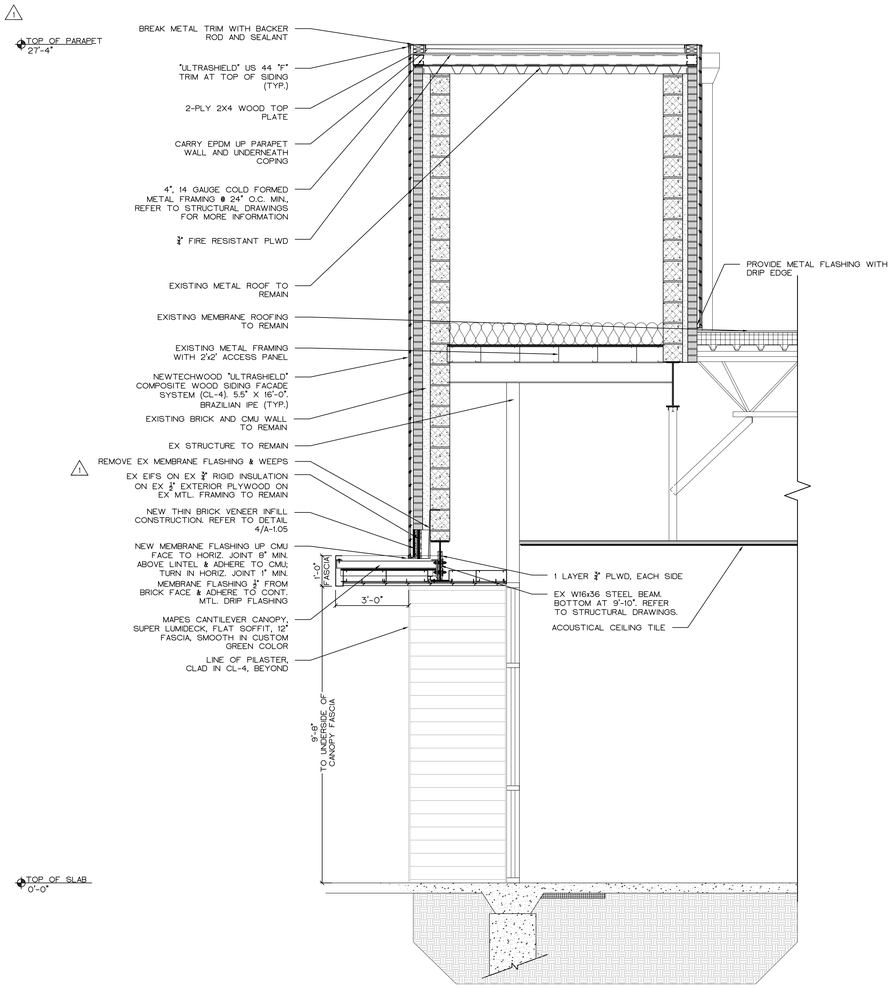

3 / A-1.04 CROSS SECTION THROUGH PORTAL

SCALE: 1/2" = 1'-0"

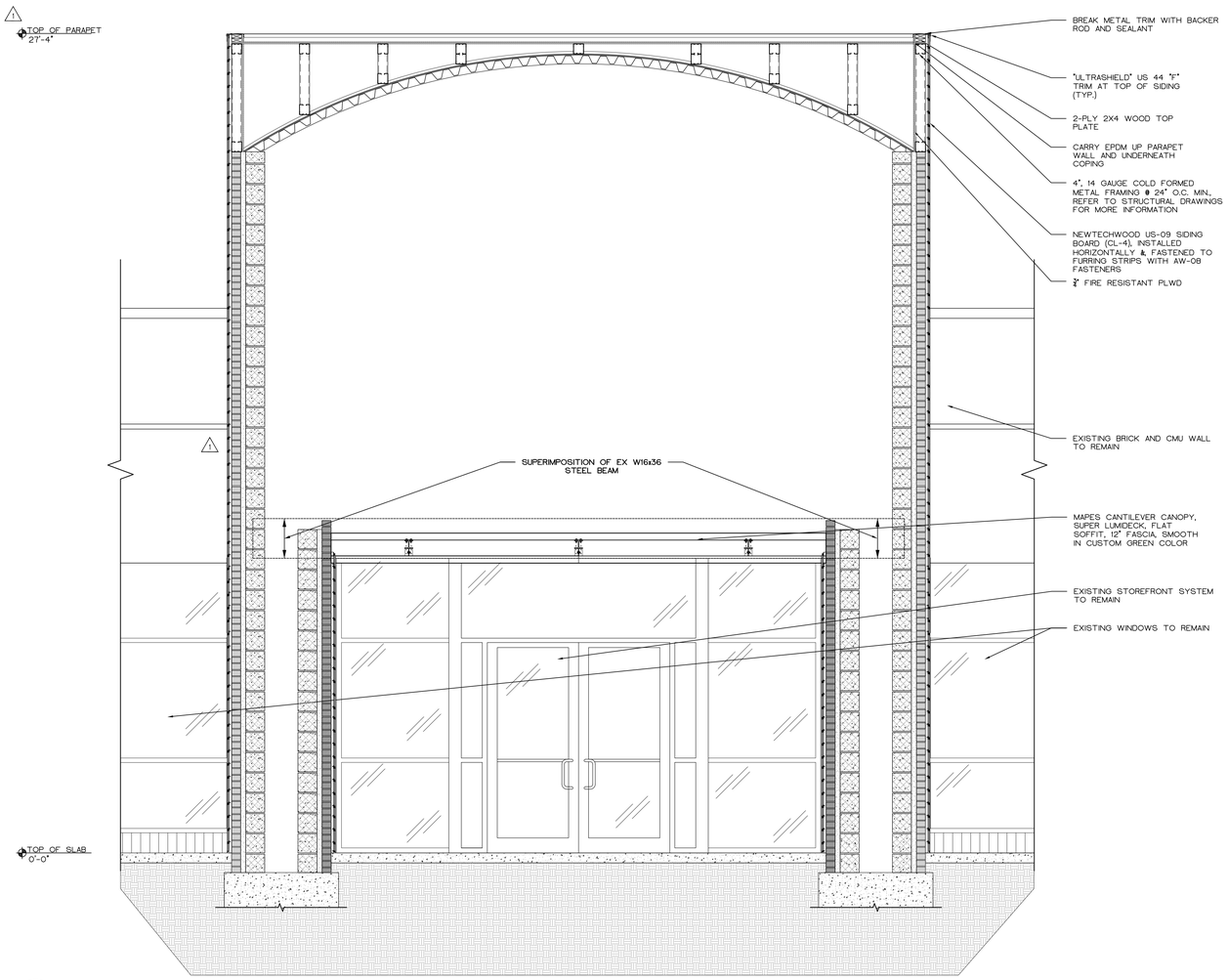

2 / A-1.04 TRANSVERSAL SECTION THROUGH PORTAL

SCALE: 1/2" = 1'-0"

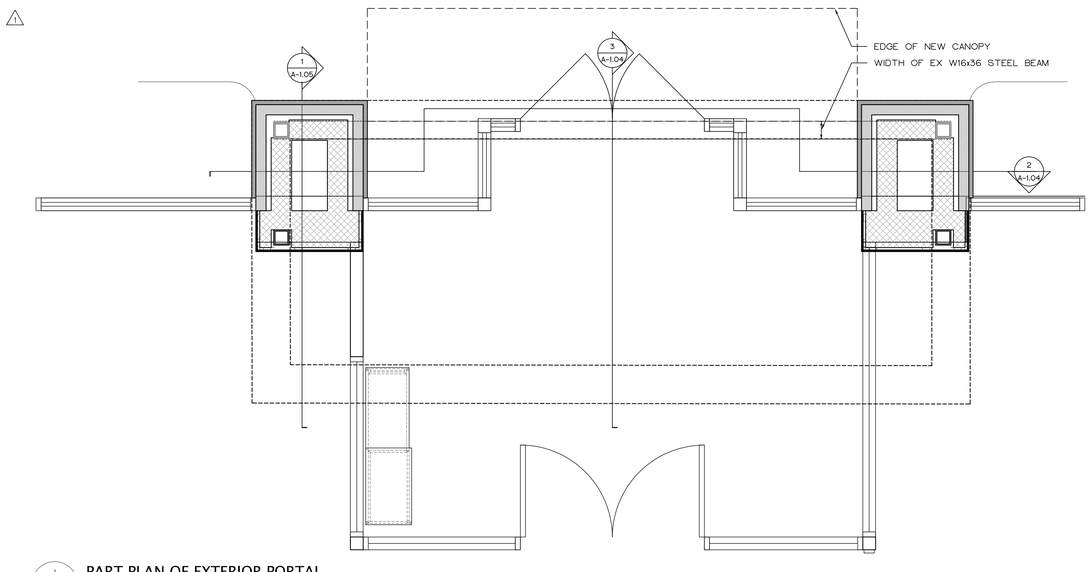

1 / A-1.04 PART PLAN OF EXTERIOR PORTAL

SCALE: 1/2" = 1'-0"

HELLYER LEWIS Inc.
ARCHITECTURE
INTERIOR DESIGN

211 South 12th St.
Phila., PA 19107
215.922.7066

THE GENERAL CONTRACTOR IS RESPONSIBLE TO VERIFY ALL DIMENSIONS ON SITE AND CONFIRM SUCH DIMENSIONS AGAINST ACTUAL SITE CONDITIONS. THE GENERAL CONTRACTOR SHALL COORDINATE ALL WORK AND RELATED TRADES, AND SHALL NOTIFY THE ARCHITECT OF ANY INTERFERENCE OF MECHANICAL, ELECTRICAL, OR PLUMBING WORK WITH THE ARCHITECTURAL WORK AND OF ANY CONFLICTS OR DISCREPANCIES IN DIMENSIONS AGAINST ON SITE CONDITIONS PRIOR TO PROCEEDING WITH THE WORK OR PROCUREMENT OF MATERIALS.

Project:

Citizens

Newburgh Branch
37307 Six Mile Road
Livonia, MI 48154

Project No: 072.02

Drawn by:	JP
Checked by:	SP/KS
Approved by:	KMB

Client Approval:	Date:
Issued for DD Review	12/11/20
Issued for Bid:	01/08/21
Issued for Permit:	01/22/21

No.	Date	Revision
1	01/29/21	Revision #1
2	02/24/21	Revision #2
3	08/13/21	REISSUED TO CITY OF LIVONIA

Scale: 1/2" = 1'-0"

Drawing:
Exterior Wall Sections and Enlarged Plan

No. A-1.04

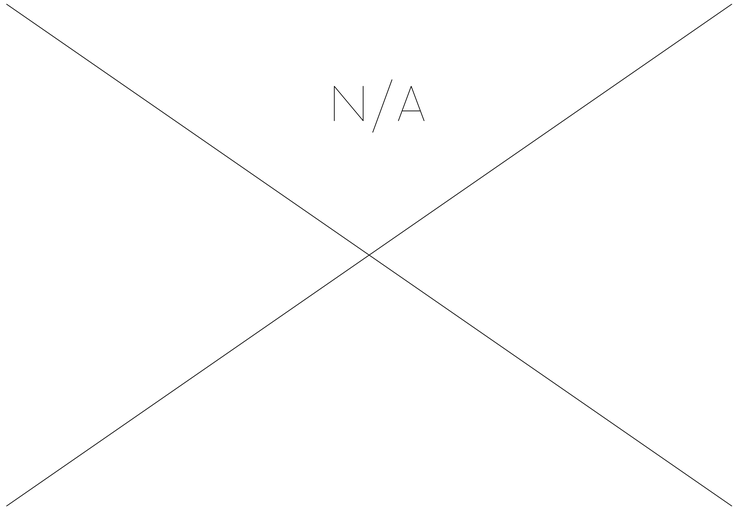

4 A-1.05 NEW BRICK VENEER CONSTRUCTION
SCALE: 3" = 1'-0"

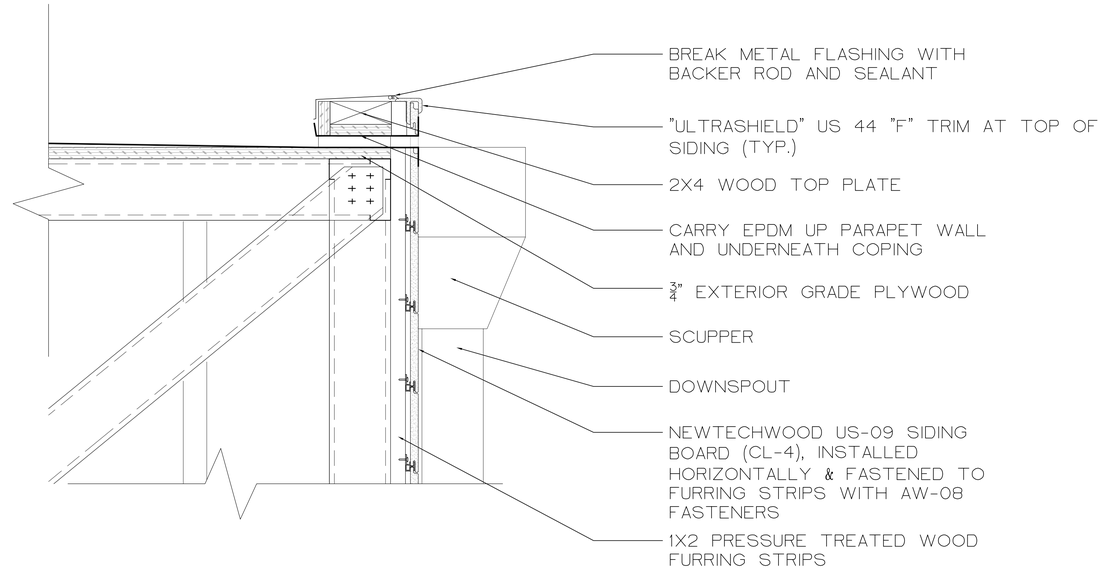

2 A-1.05 DETAIL AT SCUPPER
SCALE: 3" = 1'-0"

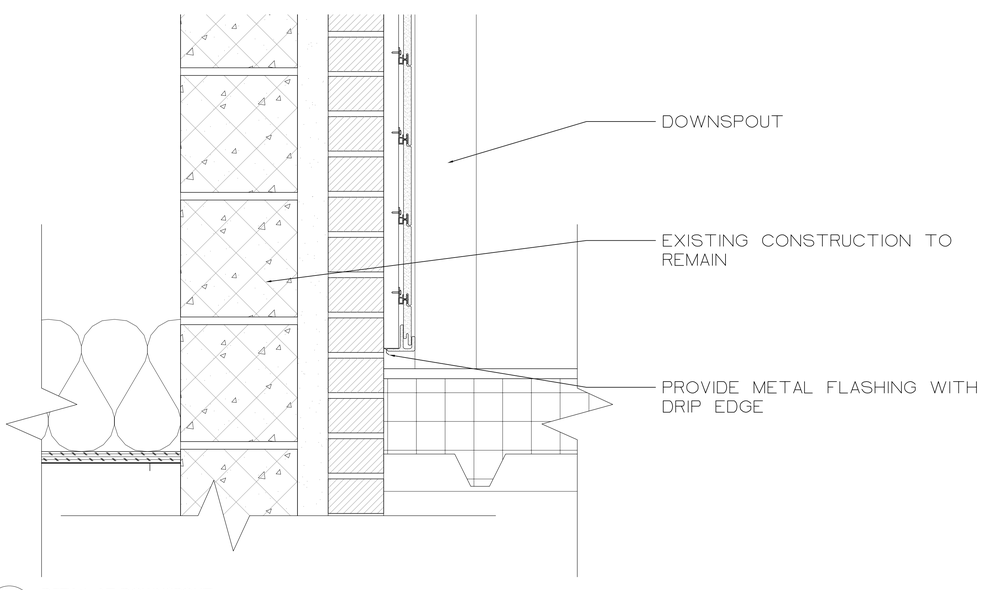

3 A-1.05 DETAIL AT DOWNSPOUT
SCALE: 3" = 1'-0"

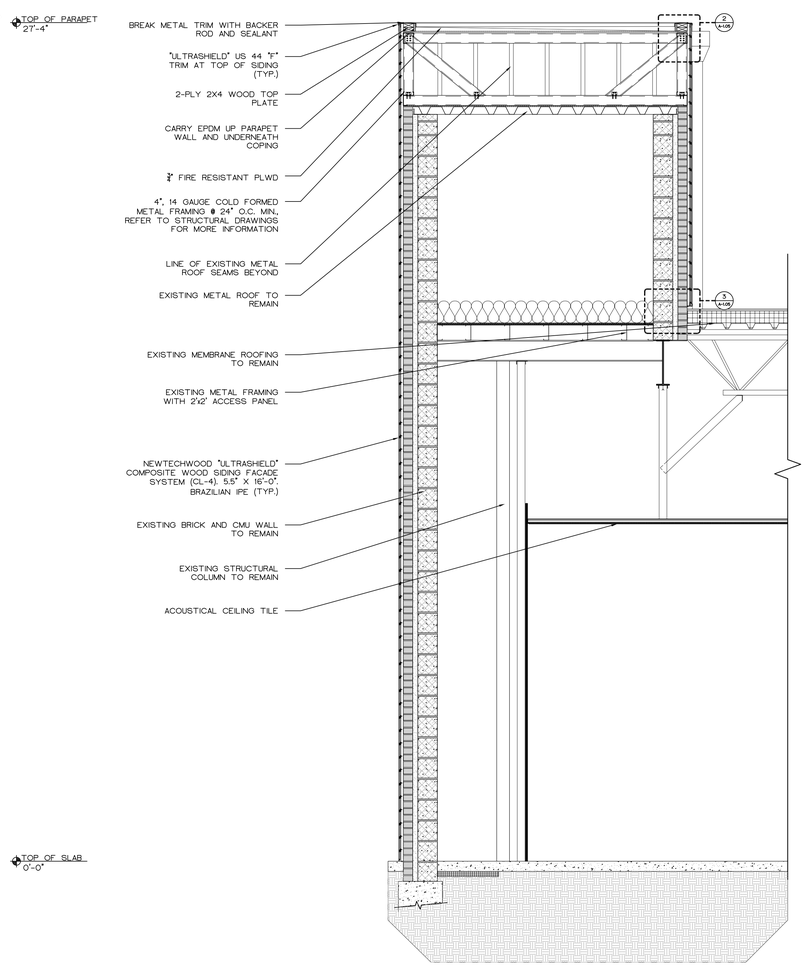

1 A-1.05 CROSS SECTION THROUGH PORTAL
SCALE: 1/2" = 1'-0"

HELLYER LEWIS Inc.
ARCHITECTURE
INTERIOR DESIGN

211 South 12th St.
Phila., PA 19107
215.922.7066

THE GENERAL CONTRACTOR IS RESPONSIBLE TO VERIFY ALL DIMENSIONS ON SITE AND CONFIRM SUCH DIMENSIONS AGAINST ACTUAL SITE CONDITIONS. THE GENERAL CONTRACTOR SHALL COORDINATE ALL WORK AND RELATED TRADES, AND SHALL NOTIFY THE ARCHITECT OF ANY INTERFERENCE OF MECHANICAL, ELECTRICAL, OR PLUMBING WORK WITH THE ARCHITECTURAL WORK AND OF ANY CONFLICTS OR DISCREPANCIES IN DIMENSIONS AGAINST ON SITE CONDITIONS PRIOR TO PROCEEDING WITH THE WORK OR PROCUREMENT OF MATERIALS.

Project:

Citizens

Newburgh Branch
37307 Six Mile Road
Livonia, MI 48154

Project No: 072.02

Drawn by:	JP
Checked by:	SP/KS
Approved by:	KMB

Client Approval:	Date:
Issued for DD Review	12/11/20
Issued for Bid:	01/08/21
Issued for Permit:	01/22/21

No.	Date	Revision
1	01/29/21	Revision #1
2	05/07/21	Revision #5
3	08/13/21	REISSUED TO CITY OF LIVONIA

Scale: As Noted

Drawing:
Exterior Wall Section and Details

No. A-1.05

Citizens
Bank
37307

Citizens Bank
37307
YOU'RE MADE READY AND SO ARE WE

Citizens
Bank
37307

READY TO
SET THE
EXAMPLE

EDR 0385

DO NOT ENTER

Clearance 9'.8"

YOU'RE
MADE
READY
AND SO
ARE WE

Citizens Bank
Citizens Bank
YOUR RETIREMENT OUR PRIORITY
MADE READY AND SO ARE WE

Citizens

Citizens

DEPARTMENT OF PUBLIC WORKS
ENGINEERING DIVISION

TODD J. ZILINCIK, P.E.
CITY ENGINEER

DAVID W. LEAR, P.E.
ASST. CITY ENGINEER

MAUREEN MILLER BROSNAN
MAYOR

DONALD R ROHRAFF
DIRECTOR OF PUBLIC WORKS

12973 FARMINGTON ROAD
LIVONIA, MICHIGAN 48150
(734) 466-2571
FAX: (734) 466-2195

August 19, 2021

Mr. Scott Miller
Planner IV
City of Livonia

Re: Petition 2021-08-08-05 – 37307 Six Mile Road

Dear Mr. Miller:

In accordance with your request, the Engineering Division has reviewed the above referenced petition. We have no objections to the proposed project at this time. The parcel is assigned the address of **#37307 Six Mile Road**.

The proposed building locations are currently serviced by public water main and sanitary sewer, as well as private storm sewer. The submitted drawings do not indicate any modifications to the existing leads, and we do not believe there will be any further impacts to the existing systems. Should changes to the existing services be required, the Owner shall submit revised plans to this office to determine if permits will be required.

It should be noted that the developer may be required to obtain a permit from the Wayne County Department of Public Service, should any work occur within the Six Mile Road right-of-way.

Should you have any additional questions on this matter, please feel free to contact myself at (734) 466-2608 or the City Engineer, Mr. Todd Zilincik at (734) 466-2561. If you would prefer, you can e-mail either of us at dlear@livonia.gov or tzilincik@livonia.gov.

Sincerely,

David W. Lear, P.E.
Assistant City Engineer

cc: 2021 Petition File

DEPARTMENT OF PUBLIC SAFETY
LIVONIA FIRE & RESCUE

DAVE HEAVENER
FIRE CHIEF

MAUREEN MILLER BROSNAN
MAYOR

14910 FARMINGTON ROAD
LIVONIA, MICHIGAN 48154-5419
734-466-2444
734-466-2082 fax

DATE: August 26th, 2021

TO: Scott O. Miller, Planner IV

FROM: Livonia Fire Prevention Division

SUBJECT: Petition 2021-08-08-05, 37307 Six Mile Rd.

This office has reviewed the site plan submitted in connection with a request to construct a commercial building on property located at the above referenced address.

We have no objections to this proposal.

Sincerely,

Greg Thomas

Greg Thomas
Fire Marshal

DEPARTMENT OF PUBLIC SAFETY
DIVISION OF POLICE

CURTIS CAID
CHIEF OF POLICE

MAUREEN MILLER BROSNAN
MAYOR

15050 FARMINGTON ROAD
LIVONIA, MICHIGAN 48154-5499
(734) 466-2470
FAX: (734) 261-2265

RECEIVED
SEP 22 2021
CITY OF LIVONIA
PLANNING COMMISSION

September 21, 2021

Mr. Scott O. Miller
Planning Commission
33000 Civic Center Drive
Livonia, MI 48154

Petition 2021-08-08-05 - 37307 Six Mile Road

Dear Mr. Miller,

I have reviewed the plans in connection with the petitions. I have no objections to the proposals.

Please feel free to contact me should you have any questions.

Sincerely,

FOR THE CHIEF OF POLICE

Sgt. Scott Sczepanski #543

Scott Sczepanski, Sergeant
Traffic Bureau
(734) 466-2107

INSPECTION DEPARTMENT

BUILDING
HEATING
PLUMBING
ELECTRICAL
ZONING
SANITATION
ENVIRONMENTAL PROTECTION
ORDINANCE ENFORCEMENT

MAUREEN MILLER BROSNAN
MAYOR

JEROME A. HANNA
DIRECTOR

33000 CIVIC CENTER DRIVE
LIVONIA, MICHIGAN 48154-3097
(734) 466-2580
FAX: (734) 466-2095

Date: September 20, 2021

To: Scott O. Miller

From: Jerome Hanna

RE: Petition 2021-08-08-05 – 37307 Six Mile Road

Pursuant to your request, the above referenced Petition has been reviewed.

This Department has no objections to this Petition.

I trust this provides the requested information.

Jerome Hanna

Jerome Hanna
Director of Inspection

DEPARTMENT OF FINANCE

Michael T. Slater
DIRECTOR OF FINANCE

Connie Kumpula
CHIEF ACCOUNTANT

MAUREEN MILLER BROSNAN
MAYOR

33000 CIVIC CENTER DRIVE
LIVONIA, MICHIGAN 48154-3097
(734) 466-2260
FAX: (734) 421-1807

August 18, 2021

Mr. Scott O. Miller
Planning Commission
33000 Civic Center Drive
Livonia, MI 48154

Petition 2021-08-08-05 - 37307 Six Mile Road

Dear Mr. Miller,

I have reviewed the address connected with the above noted petition. As there are no outstanding amounts receivable (general or water and sewer), I have no objections to the proposal.

Please contact me if you have any further questions.

Very truly yours,

Connie Kumpula
Chief Accountant

CK: jw

OFFICE OF THE TREASURER

LYNDA L. SCHEEL
CITY TREASURER

33000 CIVIC CENTER DRIVE
LIVONIA, MICHIGAN 48154-3060
(734) 466-2245
FAX: (734) 421-7230

August 25, 2021

Mr. Scott Miller – Planner IV
Planning Commission
City of Livonia

Re: Petition 2021-08-08-05 37307 Six Mile Road

Dear Mr. Miller,

In accordance with your request, the Treasurer's Office has reviewed the name and addresses connected with the above noted petition. At this time, there are no taxes due, therefore I have no objections to the proposal.

Sincerely,

Lynda L. Scheel

Lynda L. Scheel
Treasurer, City of Livonia

UNAPPROVED MINUTES

MINUTES OF THE 1,176th PUBLIC HEARINGS AND REGULAR MEETING HELD BY THE CITY PLANNING COMMISSION OF THE CITY OF LIVONIA

On Tuesday, September 21, 2021, the City Planning Commission of the City of Livonia held its 1,176th Public Hearings and Regular Meeting in the Livonia City Hall, 33000 Civic Center Drive, Livonia, Michigan.

Mr. Ian Wilshaw, Chairman, called the meeting to order at 7 p.m.

Members present:	David Bongero	Sam Caramagno	Glen Long
	Betsy McCue	Carol Smiley	Peter Ventura
	Ian Wilshaw		

Members absent: None

Mr. Mark Taormina, Planning Director, and Stephanie Reece, Program Supervisor, were also present.

Chairman Wilshaw informed the audience that if a petition on tonight's agenda involves a rezoning request, this Commission makes a recommendation to the City Council who, in turn, will hold its own public hearing and make the final determination as to whether a petition is approved or denied. The Planning Commission holds the only public hearing on a request for preliminary plat and/or vacating petition. The Commission's recommendation is forwarded to the City Council for the final determination as to whether a plat is accepted or rejected. If a petition requesting a waiver of use or site plan approval is denied tonight, the petitioner has ten days in which to appeal the decision, in writing, to the City Council. Resolutions adopted by the City Planning Commission become effective seven (7) days after the date of adoption. The Planning Commission and the professional staff have reviewed each of these petitions upon their filing. The staff has furnished the Commission with both approving and denying resolutions, which the Commission may, or may not, use depending on the outcome of the proceedings tonight.

ITEM #3 PETITION 2021-08-08-05 Citizens Bank

Mr. Caramagno, Secretary, announced the next item on the agenda, Petition 2021-08-08-05 submitted by Hellyer Lewis requesting site plan approval pursuant to Section 5.01 of the Livonia Vision 21 Zoning Ordinance in connection with a proposal to remodel the exterior of the Citizens Bank at 37307 Six Mile Road, located on the south side of Six Mile Road between Levan and Newburgh Roads in the Northwest ¼ of Section 17.

Mr. Taormina: This is an after-the-fact request. It involves changes to the exterior of the Citizens branch bank, located at theNewburgh Plaza Shopping Center near the southeast corner of Six Mile and Newburgh Roads. The property in question is located within a Special Area Development Control Zone. There are seven such zones throughout the city that are subject to special regulations. Pursuant to Section 5.01 of the zoning ordinance, which includes a provision that requires that all building exterior modifications or alterations first be approved by the City Council upon submission of findings by the Planning Commission. The changes that were completed include painting the exterior brick a bright white. These are photos of the building before the modifications were made and this is a rendering showing what the changes look like today. We have a couple photos that we will show you in a second. The changes that were completed involved painting the exterior brick bright white. The upper façade, which mostly consists of an E.I.F.S. material, was painted a bright green. In addition, the main entrance that is located on the north side of the building facing Six Mile has been remodeled. Previously, the entrance was defined by a brick tower feature that had an arched roofline. The brick on the structure was covered with a composite wood siding and the roofline was squared off. This is the tower element, and you can actually see where that arch was located previously. This is what it looked like prior to. Here is a side view. These are some photos that give you kind of an idea of the changes as well with the painting and the green façade. With that, Mr. Chairman, I can read out the departmental correspondence.

Mr. Wilshaw: Yes, please.

Mr. Taormina: The first item is from the Engineering Division, dated August 19, 2021, which reads as follows: *"In accordance with your request, the Engineering Division has reviewed the above referenced petition. We have no objections to the proposed project at this time. The parcel is assigned the address of #37307 Six Mile Road. The proposed building locations are currently serviced by public water main and sanitary sewer, as well as private storm sewer. The submitted drawings do not indicate any modifications to the existing leads, and we do not believe there will be any further impacts to the existing systems. Should changes to the existing services be required, the Owner shall submit revised plans to this office to determine if permits will be required. It should be noted that the developer may be required to obtain a permit from the Wayne County Department of Public Service, should any work occur within the Six Mile Road right-*

of-way." The letter is signed by David W. Lear, P.E., Assistant City Engineer. The next letter is from the Livonia Fire & Rescue Division, dated August 26, 2021, which reads as follows: "*This office has reviewed the site plan submitted in connection with a request to construct a commercial building on property located at the above referenced address. We have no objections to this proposal."* The letter is signed by Greg Thomas, Fire Marshal. The next letter is from the Division of Police, dated September 21, 2021, which reads as follows: *"I have reviewed the plans in connection with the petition. I have no objections to the proposal."* The letter is signed by Scott Sczepanski, Sergeant, Traffic Bureau. The next letter is from the Inspection Department, dated September 20, 2021, which reads as follows: *"Pursuant to your request, the above-referenced petition has been reviewed. This Department has no objections to this petition."* The letter is signed by Jerome Hanna, Director of Inspection. The next letter is from the Finance Department, dated August 18, 2021, which reads as follows: "*I have reviewed the address connected with the above noted petition. As there are no outstanding amounts receivable (general or water and sewer), I have no objections to the proposal."* The letter is signed by Connie Kumpula, Chief Accountant. The next letter is from the Treasurer's Department, dated August 25, 2021, which reads as follows: *"In accordance with your request, the Treasurer's Office has reviewed the name and addresses connected with the above noted petition. At this time, there are no taxes due, therefore I have no objections to the proposal."* The letter is signed by Lynda Scheel, Treasurer. That is the extent of the correspondence.

Mr. Wilshaw: Are there any questions of the Planning Director?

Mr. Ventura: Mr. Taormina, at our study session we had some conversation about the owner of the shopping center weighing in on the fact that this building is no longer conforming to the appearance of the rest of the center, and I wonder if in the interim you heard anything from the owner of the shopping center?

Mr. Taormina: I did speak to the owner, actually on a couple of occasions. He made it a point to visit the site. He reminded me of the original intent when this structure was built. When they relocated the First Federal that was located near where the Bush's is now to the front of the shopping center. It was the intent at that time that the architecture of the bank match the rest of the center, which was remodeled at the time. He feels that the changes that were made to the exterior of this building are not consistent

with the Planning Commission and City Council's review and approvals at that time. He did not object to the fact that there were changes, he just believes there is a better color scheme. One that would be more appropriate and consistent with the original approvals. My conversation with him, and he seemed to object mostly to the bright green, he felt that is something that should probably be modified.

Mr. Ventura: Thank you.

Mr. Wilshaw: Thank you, Mr. Ventura. Any other questions?

Mr. Bongero: So, all this work was done. There was a lot of work there and did the bank…was it required that they get permission from the land…you know what I am saying? There is like some…where is it going?

Mr. Taormina: No. Part of it is a little vague. While there is language in the agreement, this is a land lease. Apparently, there is some language relative to architectural compatibility. I am not exactly sure since I haven't seen the language. He, the owner, did not indicate that per the agreements there was enough in the agreements for him do anything beyond expressing his opinion to the Planning Commission.

Mr. Bongero: So, is it an option to paint the E.I.F.S. and leave the wood in the front that kind of matches the mall?

Mr. Taormina: He has no control over that, but again, he wanted to remind us of the original intent which was clearly spelled out in the proceedings of the meetings when this was approved. It was clear that it was the intent to match the architecture. Siegal Toumala was the architect of this building, as well as the shopping plaza, and it was clear from the design that it was intended to match. That was something that was pointed out during the review process and was highly considered at the time when the decisions were made by both the Planning Commission and City Council.

Mr. Bongero: This is back, right?

Mr. Taormina: Yeah, I would have to go back and look at the year. I may have referenced it in the staff report. Early 90's maybe.

Mr. Bongero: So, it really isn't enforceable, or we don't know.

Mr. Taormina: In terms of…enforceable by the landlord?

Mr. Bongero: Yeah.

Mr. Taormina: That I don't know. I got the impression no. This is really on the City to make the ultimate decision. He is looking for our best judgement in whether or not we are adhering to the original conditions.

Mr. Bongero: Thank you.

Mr. Wilshaw: Thank you, Mr. Bongero. Any other questions for our planning staff? If not, we can go to the petitioner. His representative is here. Good evening, sir.

Paul Gagel, Citizens Bank, 27777 Franklin Road, Southfield, MI 48034.

Mr. Wilshaw: Thank you. What else would you like to tell us about this petition?

Mr. Gagel: Well, first of all, as has been mentioned, this was after the fact. During our due diligence period the architect that we engaged at the time did not find the ordinance and then we submitted the plans for review. They went to the city like we normally do for our review. We received no comments on the exterior that another step was necessary for the exterior work. So, we proceeded with the plans. We executed on the plans based on the permit that was issued. Because the plans included exterior and interior work, we just proceeded 100% with the plans. During the course of construction there were multiple inspectors that came out during the course of the project. No one flagged anything or said anything until after the fact. That is what brought us to where we are now.

Mr. Wilshaw: We will see if there are any questions from any of our commissioners regarding the project.

Ms. Smiley: Just to be clear. The city inspectors came out and inspected all of your stuff and your painting and your….and never said a word?

Mr. Gagel: Not until after we were done. They were on site for rough electrical, framing, all the inspections. The final building life, fire, safety. At the end of the project this came out that we missed a step. We inadvertently missed a step on both sides. Our side plus, in my opinion, the city comments during plan

review that while all the details were called out including the paint specs, the portal that we have talked about, were all called out on the plans, but we never received any comment back from the plan reviewer that another process was needed.

Ms. Smiley: Mr. Taormina, who would the plan reviewer be?

Mr. Taormina: I really don't know who it was in this particular case. There are three different plan reviewers, or there were at the time, so who actually did it…

Ms. Smiley: So, like the Inspection Department?

Mr. Taormina: Yeah. They work for the Inspection Department. It was my understanding that the permit specifically excluded any exterior work. That was missed by the contractors so they must have assumed that the plans were approved as submitted, which did show the exterior work even thought it was excluded from the permit. The inspectors would not have inspected the painting. That is not something that they would do…if you are an electrical inspector, you are there to inspect the electrical work, not the exterior. The same thing goes for the other mechanical permits. I don't know about any building inspectors if they were on the site when it came to the structural elements like the tower and if they actually reviewed that or not. I can't answer that. It is water under the bridge now. We have had that discussion with the Inspection Department.

Ms. Smiley: Okay, thank you.

Mr. Wilshaw: Thank you, Ms. Smiley. Any other questions?

Mr. Bongero: So, my opinion, this is an issue that needs to be settled between Citizens and the landlord, because obviously something must have been enforceable if the Building Department came out at the end and said hey, we missed a step. There was some step that needed to be taken, right? What was the step?

Mr. Taormina: If I may Mr. Chairman?

Mr. Wilshaw: Sure, Mr. Taormina.

Mr. Taormina: The process is to first go before this body and the City Council for approval. The reason, again, is that this is located within an overlay district. It is called Special Area Development Control Zone where exterior alterations to buildings first require the

approval of the Planning Commission and City Council. That is the step that was missing.

Mr. Bongero: So, is that what we are kind of doing now?

Mr. Taormina: Yes, that is what we are doing now. Again, after-the-fact. It is my understanding that the landlord does not have direct control over the exterior alterations.

Mr. Bongero: We can't enforce it we don't think.

Mr. Taormina: That is correct.

Mr. Bongero: So, are you willing to talk it out with him and come to a resolution?

Mr. Gagel: Yes, actually I had a conversation with Mr. Frankel on this. The green is a little too much green. He asked if we could soften the green. The conversation with him was he would look forward to seeing what the architect would recommend on doing that and softening the green. I did submit some current photos from last Thursday. They were submitted to the city for that to show that. Even on the rendering there, you can see that there is two levels of green in the E.I.F.S. There is a dividing line. It is something that we can look at and maybe separate that and find a color that softens the green but yet matches everything else on the building plus include the whole center itself, which would be more amicable to the owner of the property.

Mr. Bongero: That seems like a good move right there.

Ms. Smiley: Can I ask? He likes the painted brick?

Mr. Gagel: My conversation with him was…I told you its not the white, I don't like that much green, when I had the conversation with him. He did not object to the…it is actually a pewter color. It looks white when the sun hits it, it looks like a white. No, he did not object to that in my conversations with him.

Ms. Smiley: The brick was in good shape and looked nice before you painted it. That is my opinion.

Mr. Wilshaw: That is fine. Anyone else with any questions or comments?

Mr. Ventura: Mr. Gagel, at our study session we talked about maintenance and the fact that we really don't have painted brick in the city

because it ultimately deteriorates, and it does that rather rapidly. So, we asked for some type of maintenance schedule, and I note that attached…you provided a schedule here for inspections, but I don't see any maintenance committed to in the schedule.

Mr. Gagel: You mean as far as repainting or touching up?

Mr. Ventura: Yeah. Exactly.

Mr. Gagel: Well, in the document that I submitted, let's consider it a living document, which is amendable, but it is in the document that every two years it would be assessed for repainting if needed. Then we would submit for our capital budget within the bank, how we do that, but I have also done some other due diligence through the architect. The durability of the paint is five to ten years on this product that we use.

Mr. Ventura: I understand exactly what…and you are telling me what I understood. So, my discomfort is that this gets lost in the cornflakes over time and whether or not the inspections are done, somebody decides you don't have the money to do the painting, so it doesn't happen, and the building deteriorates. It is not at an inconspicuous location in that shopping center, and it is substantially non-conforming with the rest of the center. It is either something you like, and it is pleasant to look at or it is an eyesore. It can be a deteriorating eyesore if it is not maintained. So, what I am going to suggest, or at least ask you is, would you agree to a commitment to repaint the building every five years?

Mr. Gagel: I would have to take that back as a recommendation. I don't have absolute control over the budget. I certainly would strongly recommend and encourage that we do that, but I would have to go to the powers that be within the bank to get that commitment.

Mr. Ventura: I guess another fallback question would be, last week we discussed other options and what other latitude this board had and that is to just take that paint off, which would you prefer?

Mr. Gagel: I would not prefer to take the paint off. I think sandblasting to remove the paint would be detrimental to the building itself. It would cause some damage to the brick and the mortar, which would create pretty expensive repair for us, $50,000 to $60,000 to do all that tuckpoint for the entire building. So, I would be very hesitant to do that. I would rather strongly advocate

repainting the building every five years and make sure we have something in our plan within the bank that our facilities department knows that they need to do that and just automatically put it in the budgets.

Mr. Ventura: I guess, as you speak, the other thing that occurs to me is that something could be put over the brick at this point since you repainted it already. That wouldn't need maintenance. That might be more acceptable to this body than the painted surface. Is that an option for the bank?

Mr. Gagel: When you say put something over it, are you talking about a face brick or something like that?

Mr. Ventura: Yeah. There is thin brick.

Mr. Gagel: There is a thin brick. All of those solutions have pros and cons. There is no doubt about it. We would have to do some due diligence to how it is adhered to the brick, what would happen with freeze thaw expansion in the winter and different seasons. We would have to explore that. I would have to ask the architect to weigh in on that for the full pros and cons on that type of product.

Mr. Ventura: Thank you. Just to be clear, at this point you are not willing to make any commitment to maintenance at all?

Mr. Gagel: No. I just said that instead of sandblasting I would go back to the bank and say that we need…

Mr. Ventura: Right. But tonight, for the purposes of this meeting.

Mr. Gagel: For the purposes of this meeting? Yeah, I will commit to painting every five years.

Mr. Ventura: You will?

Mr. Gagel: Sure. I will take that back to the bank, but you are asking me to commit to something when I don't have absolute control over the purse strings.

Mr. Ventura: Your right, I am. Got it.

Mr. Gagel: If I don't have absolute control over the budget, I can't…I can only take it so far.

Mr. Ventura: Thank you for that clarification. Thank you.

Mr. Wilshaw: Understandable. Thank you. Any other questions or comments from any of the commissioners? No one else? There is no one else in our audience wishing to speak on this item. Mr. Gagel, I do have one question for you. You have gone through this process…you are a project manager, so you have gone through this process for other sites as well?

Mr. Gagel: We have, yes. We have done other properties like this with the same paint and finishes and other municipalities local to Livonia, yes.

Mr. Wilshaw: Okay, when you have gone through that process, you have normally had to go in front of a Planning Commission or a City Council or anything or do you just get a rubber stamp approval?

Mr. Gagel: We have gone through Royal Oak, Dearborn Heights. They did not call out specifics on exterior of the building as two separate initiatives. It was all wrapped into one building permit.

Mr. Wilshaw: Okay, so that may be part of why this process seems a little different to you than other processes you have experienced elsewhere.

Mr. Gagel: Correct.

Mr. Wilshaw: Okay, that is fair enough. Thank you, Mr. Gagel. If there is no other questions or comments from anyone and there is no one in our audience wishing to speak on this, then a motion would be in order.

On a motion by Long, seconded by Ventura, and adopted, it was

#09-50-2021 ***RESOLVED***, That the City Planning Commission does hereby recommend to City Council that Petition 2021-08-08-05 submitted by Hellyer Lewis requesting site plan approval pursuant to Section 5.01 of the Livonia Vision 21 Zoning Ordinance in connection with a proposal to remodel the exterior of the Citizens Bank at 37307 Six Mile Road, located on the south side of Six Mile Road between Levan and Newburgh Roads in the Northwest ¼ of Section 17, be approved subject to the following conditions:

1. That the Exterior Elevations Plans identified as No. A-1.03 and No. A-1,04, both dated August 13, 2021, as revised,

prepared by Hellyer Lewis Inc., are hereby approved and shall be adhered to.

2. That the Petitioner shall submit a maintenance schedule to the Inspection Department indicating the annual inspections of the exterior of the building, and that the building shall be repainted at least every five (5) years, or sooner, as may be determined by the Inspection Department.

3. That the specific plans referenced in this approving resolution shall be submitted to the Inspection Department.

Mr. Wilshaw: Is there any discussion?

Mr. Bongero: So, with Glen adding the five-year repainting language, I know you said that you would commit to that, but in the end, you still have to get approval from the higher ups, right?

Mr. Gagel: Yeah.

Mr. Bongero: Okay, is that good enough?

Mr. Long: I understand that he has to run it up, but if they don't approve it then this becomes null and void. Actually, I want to amend what I said, that it has to be painted at least every five years. If the maintenance schedule…if the Inspection Department indicated that after three years it was an eyesore, I guess we would want to be able to revisit that, so I am not sure…how do we memorialize that?

Mr. Taormina: We would fashion language that would say something to effect "shall be repainted upon recommendation of the Inspection Department or at least every five years" Something to that effect.

Mr. Long: Or at least every five years so that is the amendment to my motion.

Ms. Smiley: How about dialing down the green, is that included in the paint job?

Mr. Long: That is not included in the paint. It is not included in my motion. It sounded like they were working that out and I am not really sure that…I am more concerned with the brick and the durability of the paint of the brick. I think that…I mean…I am not saying

that I wouldn't entertain another change to my motion, but that is not anything that I included.

Ms. Smiley: I guess that is between them and the landlord…the new greens?

Mr. Long: Yeah. I am fine leaving that with them, but you guys can vote me down and we can start over if you would like.

Ms. Smiley: Nope.

Mr. Wilshaw: That is the whole point of having this conversation, to what else everyone has to say about it and go from there. Any other questions or comments? If not, please call the roll.

A roll call vote on the foregoing resolution resulted in the following:

AYES:	Long, McCue, Bongero, Smiley, Ventura, Caramagno,
NAYS:	Wilshaw
ABSENT:	None
ABSTAIN:	None

Mr. Wilshaw, Chairman, declared the motion is carried and the foregoing resolution adopted. It will go on to City Council with an approving resolution.

LETTER TO THE LIVONIA CITY COUNCIL

10.

Law
October 14, 2021

MEETING DATE	PREPARED BY
November 8, 2021	Brenda Smyser, Program Supervisor

AGENDA ITEM

ACCEPTANCE OF QUIT CLAIM DEED: Department of Law, re: secured without monetary consideration from Adams Park Development, LLC, to obtain the right-of-way for property adjacent to Lyndon Park Site Condominiums, located in the South 1/2 of Section 24 (Parcel ID's 46-095-99-0011-000 and 46-096-99-0004-000)

BACKGROUND

We are transmitting for Council acceptance a quit claim deed, secured without monetary consideration, from Adams Park Development, LLC, for the right of way adjacent to Parcel I.D.s #46 095-99-0011-000 and #46 096-99-0004-000.

RECOMMENDATION

RESOLVED, that having considered a communication from the Department of Law, dated October 14, 2021, approved for submission by the Mayor, transmitting for Council acceptance of a quit claim deed from Adams Park Development, LLC, for the right-of-way adjacent to Parcel I.D.s #46 095-99-0011-000 and # 46 096-99-0004-000 (Lyndon Park Site Condominium), more particularly described as:

Part of the South 1/2 of Section 24, Town 1 South, Range 9 East, City of Livonia, Wayne County, Michigan, described as:

Commencing at the center 1/4 corner of said Section 24 as recorded in L.C.R.C. L. 47230, P. 445-446 W.C.R., and the point of beginning; thence along the east-west 1/4 line of Section 24, S 89°28'13" E 659.96 feet to the west line of Buckingham Village Subdivision as recorded in L. 77, P. 66-67 of Plats, W.C.R.; thence along said line S 00°21'49" W 89.99 feet to a point on a curve concave to the south with a radius of 990.52 feet; thence northwesterly 306.34 feet along the arc of said curve, through a central angle of 17°43'12" (the chord of said curve bears N 80°36'37" W 305.12 feet); thence N 89°28'13" W 358.34 feet to the north-south 1/4 line of Section 24; thence continuing N 89°28'13" E 0.37 feet; thence N 89°33'41" W 122.48 feet to the east line of Harrison Avenue (86 feet wide); thence N 00°07'35" W 43.00 feet to the east-west 1/4 line of Section 24; thence along said line S 89°33'41" E 122.94 feet to the point of beginning. Containing 0.8799 acres of land

The Council does hereby, for and on behalf of the City of Livonia, accept the aforesaid Quit Claim Deed, and the Mayor and City Clerk are hereby authorized to execute the Quit Claim Deed conveying the above-described property to the City of Livonia, and the City Clerk is hereby requested to have the same recorded in the Office of the Register of Deeds and to do all other

things necessary or incidental to fulfill the purpose of this resolution.

FISCAL CONSIDERATION

None

ATTACHMENTS

1. Quit Claim Deed ROW Lyndon Park Site Condo

APPROVED BY

Date: October 14, 2021

Paul Bernier, City Attorney

Date: October 15, 2021

Maureen Miller Brosnan, Mayor

DEPARTMENT OF PUBLIC WORKS
ENGINEERING DIVISION

TODD J. ZILINCIK, P.E.
City Engineer

DAVID W. LEAR, P.E.
Assistant City Engineer

MAUREEN MILLER BROSNAN
MAYOR

DONALD R. ROHRAFF
Director of Public Works

12973 FARMINGTON ROAD
LIVONIA, MICHIGAN 48150
(734) 466-2571
FAX: (734) 466-2195

October 14, 2021

Department of Law
City of Livonia

Re: Quit Claim Deed
Right of Way Adjacent to Parcel I.D.s #46 095-99-0011-000 and #46 096-99-0004-000
Lyndon Park Site Condominium
S ½ of Section 24

Ladies and Gentlemen:

Transmitted herewith is one (1) Quit Claim Deed received by this office from Adams Park Development, LLC. This Quit Claim Deed was requested by the Engineering Division as part of the development of the subject parcels for Lyndon Park Site Condominium, in order to obtain the necessary road right of way.

The legal description contained in the instrument and shown below meets with the approval of this office:

Description of Quit Claim, <u>Lyndon Avenue Right-of-Way</u>

Part of the South ½ of Section 24. Town 1 South, Range 9 East, City of Livonia, Wayne County, Michigan, described as follows:

Commencing at the center ¼ corner of said Section 24 as recorded in L.C.R.C. L. 47230, P. 445-446 W.C.R., and the point of beginning; thence along the east-west ¼ line of Section 24, S 89°28'13" E 659.96 feet to the west line of Buckingham Village Subdivision as recorded in L. 77, P. 66-67 of Plats, W.C.R.; thence along said line S 00°21'49" W 89.99 feet to a point on a curve concave to the south with a radius of 990.52 feet; thence northwesterly 306.34 feet along the arc of said curve, through a central angle of 17°43'12" (the chord of said curve bears N 80°36'37" W 305.12 feet); thence N 89°28'13" W 358.34 feet to the north-south ¼ line of Section 24; thence continuing N 89°28'13" E 0.37 feet; thence N 89°33'41" W 122.48 feet to the east line of Harrison Avenue (86 feet wide); thence N 00°07'35" W 43.00 feet to the east-west 1/4 line

of Section 24; thence along said line S 89°33'41" E 122.94 feet to the point of beginning. Containing 0.8799 acres of land.

Please review the instrument as to form and forward same to the City Council for their approval.

Should you have any questions, please feel free to contact this office.

Sincerely,

David W. Lear, P.E.
Assistant City Engineer

DWL:kjw
Attachment
cc: DPW
File

QUIT CLAIM DEED

KNOW ALL MEN BY THESE PRESENTS: That the Grantor, Adams Park Development, LLC, a Michigan limited liability company whose address is 31333 W. 13 Mile Road, Suite 200, Farmington Hills, Michigan 48834 quit claims to the City of Livonia, a Michigan municipal corporation, whose address is 33000 Civic Center Drive, Livonia, Michigan 48154, the following described premises situated in the City of Livonia, Wayne County and State of Michigan, to wit:

Description of Quit Claim, Lyndon Avenue Right-of-Way

Part of the South ½ of Section 24. Town 1 South, Range 9 East, City of Livonia, Wayne County, Michigan, described as follows:

Commencing at the center ¼ corner of said Section 24 as recorded in L.C.R.C. L. 47230, P. 445-446 W.C.R., and the point of beginning; thence along the east-west ¼ line of Section 24, S 89°28'13" E 659.96 feet to the west line of Buckingham Village Subdivision as recorded in L. 77, P. 66-67 of Plats, W.C.R.; thence along said line S 00°21'49" W 89.99 feet to a point on a curve concave to the south with a radius of 990.52 feet; thence northwesterly 306.34 feet along the arc of said curve, through a central angle of 17°43'12" (the chord of said curve bears N 80°36'37" W 305.12 feet); thence N 89°28'13" W 358.34 feet to the north-south ¼ line of Section 24; thence continuing N 89°28'13" E 0.37 feet; thence N 89°33'41" W 122.48 feet to the east line of Harrison Avenue (86 feet wide); thence N 00°07'35" W 43.00 feet to the east-west 1/4 line of Section 24; thence along said line S 89°33'41" E 122.94 feet to the point of beginning. Containing 0.8799 acres of land.

Tax Parcel Nos. 46 095-99-0011-000 and 46 096-99-0004-000

For full consideration of $1.00 dollar.

Dated this 13th day of October, 2021

Grantor:

Adams Park Development LLC,
a Michigan limited liability company
Manager

By: Windmill Lyndon Park LLC,
a Michigan limited liability company
Its: Manager and Member

By: MM LLC,
a Michigan limited liability company
Its: Manager

By: _____
Stuart L. Michaelson
Its: Manager

And By: SDC Ventures, LLC,
a Michigan limited liability company
Its: Manager and Member

By: _____
Roger Sherr
Its: Manager

Acknowledged before me in Oakland County, Michigan, on October 13, 2021, by Stuart L. Michaelson, Manager of MM LLC, a Michigan limited liability company, which is the Manager of Windmill Lyndon Park LLC, a Michigan limited liability company, which is a Manager of Adams Park Development LLC, a Michigan limited liability company, on behalf of the company.

_____
Notary's Stamp
DENISE NORDSTROM
NOTARY PUBLIC, STATE OF MI
COUNTY OF OAKLAND
MY COMMISSION EXPIRES Jan 17, 2027
ACTING IN COUNTY OF

Denise Nordstrom
Notary's Signature
Notary Public, OAKLAND County, Michigan
Acting in OAKLAND County, Michigan
My Commission Expires: 1/17/2027

Acknowledged before me in Oakland County, Michigan, on October 13, 2021, by Roger Sherr, Manager of SDC Ventures LLC, a Michigan limited liability company, which is a Manager of Adams Park Development LLC, a Michigan limited liability company, on behalf of the company.

Notary's Stamp

TERRY ANN GRIEVE
Notary Public - State of Michigan
County of Oakland
My Commission Expires Mar 18, 2026
Acting in the County of OAKLAND

Notary's Signature
Notary Public, OAKLAND County, Michigan
Acting in OAKLAND County, Michigan
My Commission Expires: March 18, 2026

Instrument drafted by: Todd J. Zilincik, P.E.
City Engineer
Engineering Division
33000 Civic Center Drive
Livonia, Michigan 48154

CERTIFIED SURVEY

EXHIBIT "A"
PARENT PARCEL

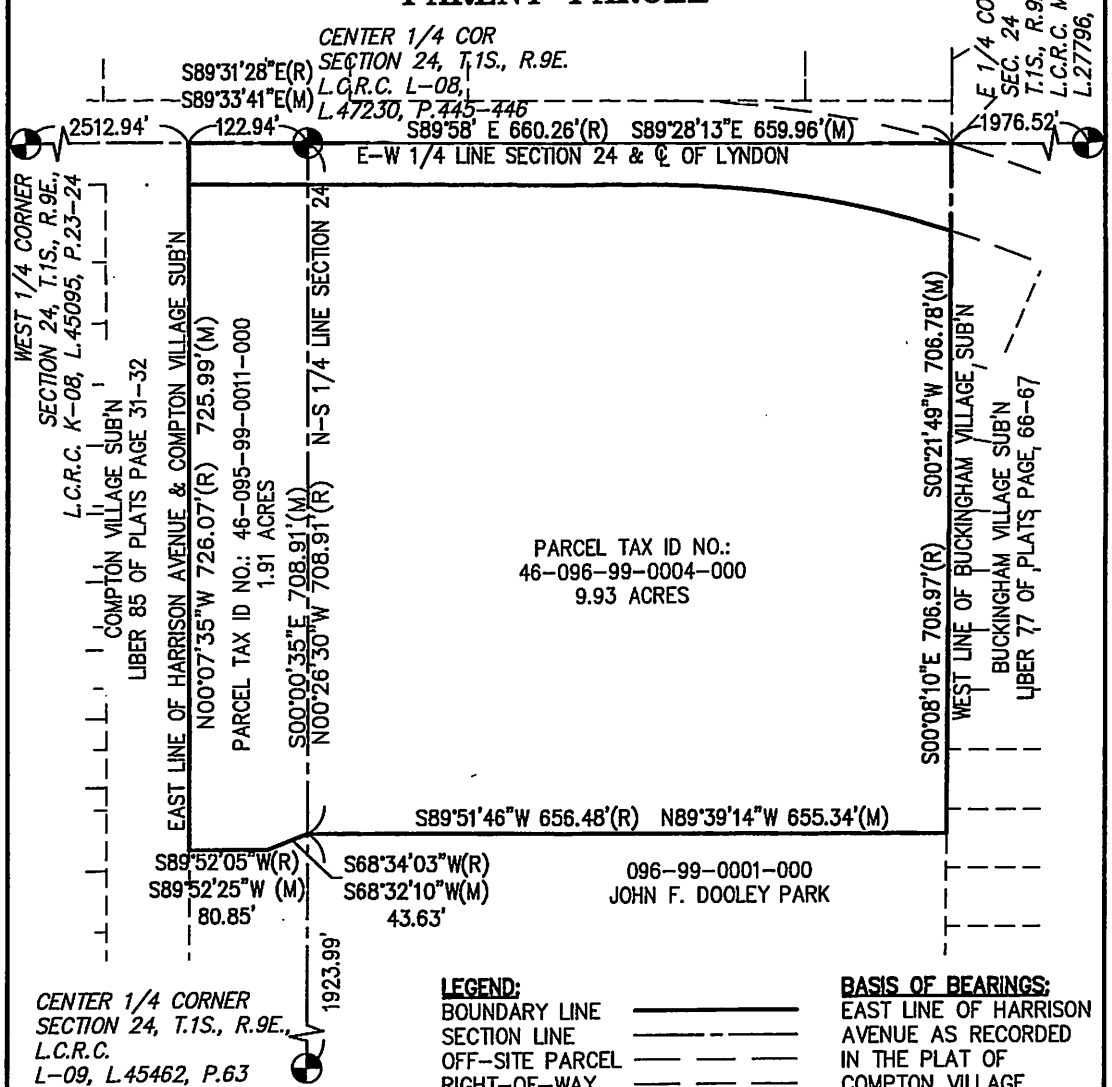

LEGEND:

BOUNDARY LINE	————
SECTION LINE	——— - ———
OFF-SITE PARCEL	— — —
RIGHT-OF-WAY	— — —
FOUND IRON ROD	F.I.R.
FOUND CONCRETE MONUMENT	F.C.M.

BASIS OF BEARINGS:
EAST LINE OF HARRISON AVENUE AS RECORDED IN THE PLAT OF COMPTON VILLAGE, SUB'N, LIBER 85, PAGES 66-67 OF PLATS, WAYNE COUNTY RECORDS

SHEET INDEX:
1 PARENT PARCEL
2 RIGHT-OF-WAY TO BE DEDICATED
3 PROPOSED PARCEL

DATE: 08-06-21 | SCALE: 1" = 150'

SURVEYOR'S CERTIFICATE: WE HEREBY CERTIFY THAT WE SURVEYED AND MAPPED THE ABOVE PLATTED AND DESCRIBED ON 09-03-20 AND THAT THE RATIO OF CLOSURE OF THE UNADJUSTED FIELD OBSERVATIONS OF SUCH SURVEY WAS ∞ AND THAT THIS SURVEY COMPLIES WITH ALL THE REQUIREMENTS OF P.A. 132 OF 1970, AS AMENDED.

SHEET: 1 OF 3 | SURVEY NO. 2020.14

MLP
Michael L. Priest & Associates, Inc.
40655 Koppernick Road, Canton, MI 48187
phone: (734) 459-8560
fax: (734) 459-2585

STATE OF MICHIGAN
MICHAEL L. PRIEST
LAND SURVEYOR
NO. 22733
Licensed Land Surveyor

By _____

CERTIFIED SURVEY

EXHIBIT "A"

R.O.W. TO BE DEDICATED

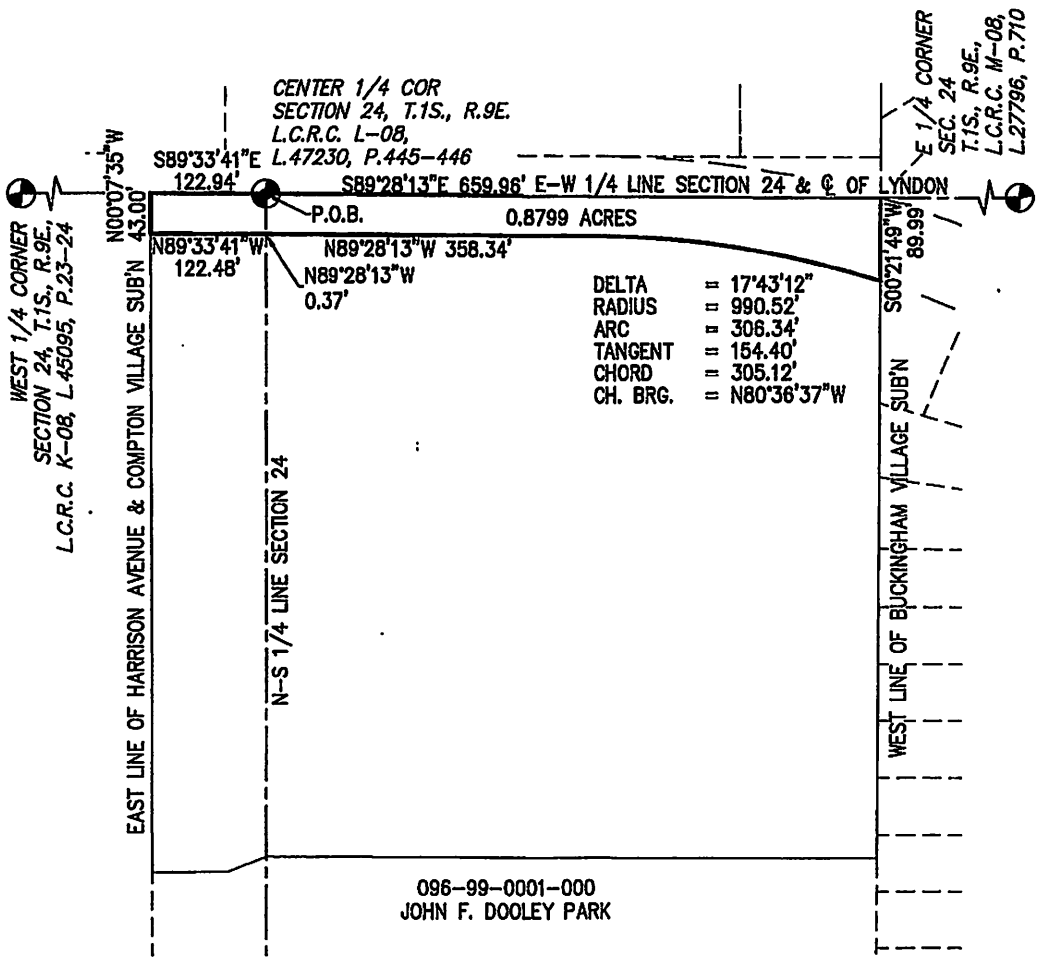

LAND TO BE DEEDED TO THE CITY OF LIVONIA:
PART OF THE SOUTH 1/2 OF SECTION 24, TOWN 1 SOUTH, RANGE 9 EAST, CITY OF LIVONIA, WAYNE COUNTY, MICHIGAN, DESCRIBED AS FOLLOWS:

COMMENCING AT THE CENTER 1/4 CORNER OF SAID SECTION 24 AS RECORDED IN L.C.R.C. L. 47230, P. 445-446 W.C.R., AND THE POINT OF BEGINNING; THENCE ALONG THE EAST-WEST 1/4 LINE OF SECTION 24, S89°28'13"E 659.96 FEET TO THE WEST LINE OF BUCKINGHAM VILLAGE SUBDIVISION AS RECORDED IN L. 77, P. 66-67 OF PLATS, W.C.R.; THENCE ALONG SAID LINE S00°21'49"W 89.99 FEET TO A POINT ON A CURVE CONCAVE TO THE SOUTH WITH A RADIUS OF 990.52 FEET; THENCE NORTHWESTERLY 306.34 FEET ALONG THE ARC OF SAID CURVE, THROUGH A CENTRAL ANGLE OF 17°43'12" (THE CHORD OF SAID CURVE BEARS N80°36'37"W 305.12 FEET); THENCE N89°28'13"W 358.34 FEET TO THE NORTH-SOUTH 1/4 LINE OF SECTION 24; THENCE CONTINUING N89°28'13"E 0.37 FEET; THENCE N89°33'41"W 122.48 FEET TO THE EAST LINE OF HARRISON AVENUE (86 FEET WIDE); THENCE N00°07'35"W 43.00 FEET TO THE EAST-WEST 1/4 LINE OF SECTION 24; THENCE ALONG SAID LINE S89°33'41"E 122.94 FEET TO THE POINT OF BEGINNING. CONTAINING 0.8799 ACRES OF LAND.

PARCEL TAX ID #:
46-095-99-0011-000
46-096-99-0004-000

PREPARED BY:

MLP
Michael L. Priest & Associates, Inc.
40655 Koppernick Road, Canton, MI 48187
phone: (734) 459-5560
fax: (734) 459-2585

PROPRIETOR:

LYNDON PARK DEVELOPMENT, LLC
31333 W. 13 MILE ROAD, SUITE 200
FARMINGTON HILLS, MI 48834

DATE: 10-06-2021	SCALE: 1" = 150'	SURVEY NO.: 2014	SHEET NO.: 2 OF 3